

CONTENT

FAX ORDER .....

FOLDER 1 LATCHES ..... A

LATCHES

- LATCHES WITH WIRE BRACKET..... A-1
- LOCKABLE LATCHES A-19
- ADJUSTABLE LATCHES..... A-21
- LATCHES WITH SHEET METAL BRACKET A-51
- HEAVY LATCHES A-61
- SPRING LATCHES..... A-71
- „BUTTERFLY“ LATCHES A-81

STRIKES..... B

FOLDER 2 TENSION BANDS C

TENSION BANDS AND HOSE CLAMPS

- TENSION BANDS AND HOSE CLAMPS C-1
- „BAND-IT“TENSION BANDS AND CABLE TIES..... C-31
- HOSE CLIPS AND PIPE CLIPS..... C-51

FOLDER 3 HANDLES..... D

BOX HANDLES

- DROP HANDLES..... D-1
- BOX HANDLES WITH RETURN SPRING..... D-21
- PULL HANDLES D-41
- PLASTIC HANDLE AND SHELL GRIPS D-51
- LASHING LUGS D-61



FOLDER 4 HINGES .....

PIANO HINGES .....E

- HINGES..... F-1
- HEAVY HINGES..... F-17
- INDIVIDUAL PARTS FOR SELF MADE HINGES..... F-35
- SPRING HINGES F-41
- PLASTIC HINGES..... F-61
- TORQUE HINGES..... F-71
- CONCEALED HINGES F-81
- HINGE FOR VEHICLE CONSTRUCTION AND PLANT ENGINEERING..... .....F-101
- ALUMINIUM HINGES F-121
- CRANKED HINGES.....F-151
- STAINLESS STEEL HINGES.....F-201

WELD ON HINGES / -ROLLS .....G

- WELD ON HINGES.....G-1
- WELD ON HINGE ROLLS G-15

FOLDER 5 LOCKING DEVICES .....

QUARTER TURNS.....J-1

QUICK RELEASE FASTENER„CAMLOC“ .....

LOCKING DEVICES.....H

- LOCKING DEVICES AND MECHANICAL CATCH.....H-1
- HASPS.....H-20
- MAGNETIC CATCHES.....H-25

HOOD CATCHES..... I-10



FOLDER 6 THREADED INSERTS .....

KEENSERTS.....
RECOIL .....R
SNEP-SELF LOCKING NUTS..... S-1

FOLDER 7 SUNDRIES.....

SUITCASE CORNERS D-71
LINCH PINS, HOSE CLIPS AND R-CLIPS..... I-2
SPRING CLIPS..... K-1
EDGE PROTECTORS L-1
RUBBER BUMP .....M

- RUBBER METAL BUFFER..... M-1
- SELF ADHESIVE RUBBER BUFFERS M-27

GENERAL TERMS AND CONDITIONS .....

HoKon
VERSCHLUSSTECHNIK &
SONDERKONSTRUKTIONEN



FAX ORDER

Company:_____

Contact person:_____

Street:_____

PLZ:_____ City:_____

Tel.:_____ Fax:_____

eMail:_____

Director:_____ Ust. - Id.No.:_____

Art.-no.	Description	Quantity	Price

Ordering example:

Art.no 6001. 01/02. 04/30

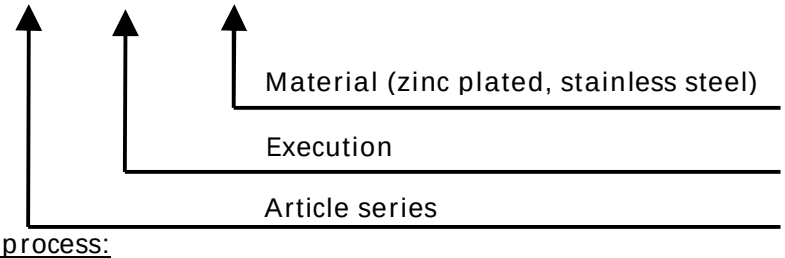

Ordering process:

Select the items you want from our catalogue, enter the article number in the left column and select the appropriate surface finishes; see example overhead.

HoKon

VERSCHLUSSTECHNIK &
SONDERKONSTRUKTIONEN

Zertifiziert nach DIN EN ISO 9001:2008



Latches

Strikes

TÜVRheinland ZERTIFIZIERT

Management System
ISO 9001:2015
ISO 14001:2015

www.tuv.com
ID 9108624624



FOLDER 1 LATCHES

FOLDER 1 LATCHES

LATCHES ..... A

- LATCHES WITH WIRE BRACKET A-1
- LOCKABLE LATCHES A-19
- ADJUSTABLE LATCHES A-21
- LATCHES WITH SHEET METAL BRACKET A-51
- HEAVY LATCHES A-61
- SPRING LATCHES A-71
- „BUTTERFLY“ LATCHES A-81

STRIKES ..... B

FOLDER 2 TENSION BANDS

FOLDER 3 HANDLES

FOLDER 4 HINGES

FOLDER 5 LOCKING DEVICES

FOLDER 6 THREADED INSERTS

FOLDER 7 SUNDRIES

GENERAL TERMS AND CONDITIONS .....

Latches

with wire bracket


Art.: 1001


Art.: 1002


Art.: 1003


Art.: 1008


Art.: 1009


Art.: 1010


Art.: 1012


Art.: 1013


Art.: 1014


Art.: 1017


Art.: 1018


Art.: 1019


Art.: 1021


Art.: 1022


Art.: 1023

Latches

with wire bracket



Art.: 1035



Art.: 1037



Art.: 1039



Art.: 1042



Art.: 3001



Art.: 3002



Art.: 3004



Art.: 3005



Art.: 3006



Art.: 3007



Art.: 3008



Art.: 3009



Art.: 3011



Art.: 3135



Art.: 6370



Art.: 1070

TÜVRheinland ZERTIFIZIERT
Management System
ISO 9001:2015
ISO 14001:2015
www.tuv.com
ID 9108624624

Further materials and surface finishes on demand. We will be pleased to give you advice.
Phone: +49 (0) 231 / 725 790 -0 eMail: info@hokon-verschlusstechnik.de
Fax: +49 (0) 231 / 725 790 -10 Homepage: www.hokon-verschlusstechnik.de



Latches

With wire bracket

Materials and surface finishes:

.00	Raw steel (1.1203)
.01	Nickel-plated
.02	Brassed
.03	Chromated
.04	Zinc plated steel
.05	Bronzed
.06	Black galvanized
.07	Blued
.08	Yellow chromated
.09	EPD (Electrophoretic deposition)
.10	Anodized silver-coloured
.20	Raw brass
.22	Polished brass
.23	Chromated brass
.30	Raw stainless steel (1.4301)
.33	Polished stainless steel
.35	Raw stainless steel (1.4401)
.50	Raw Zamak (zinc aluminium magnesium copper)
.70	Raw aluminium
.80	Raw polyamide

Ordering example:

Art.No. 1001 . 00/30

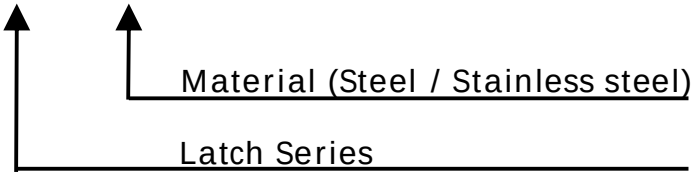

Latches
with wire bracket

Art. no.: 1001 (drilled)

Permitted tractive force: 2000 N
Breaking strength: 4000 N

Suitable strikes: see chapter „B“
Art. no.: 1001._ _/5

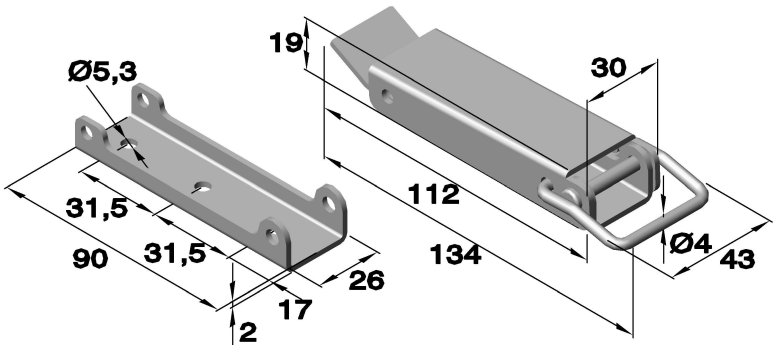

Article no.				
Series	Material			
	Raw	Nickel-plated	Zinc plated	Stainless steel
	Steel	Steel	Steel	1.4301
1001	.00/6	.01/6	.04/6	.30/6

Art. no.: 1002 (drilled, with secondary loop lock)

Permitted tractive force: 2000 N
Breaking strength: 4000 N

Suitable strikes: see chapter „B“
Art. no.: 1001._ _/5

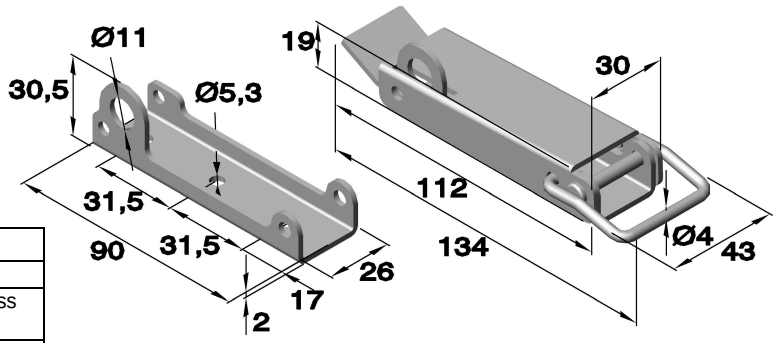

Article no.				
Series	Material			
	Raw	Nickel plated	Zinc plated	Stainless steel
	Steel	Steel	Steel	1.4301
1002	.00/6	.01/6	.04/6	.30/6

Art. no.: 1003 (drilled, with safety interlock)

Permitted tractive force: 2000 N
Breaking strength: 4000 N

Suitable strikes: see chapter „B“
Art. no.: 1001._ _/5

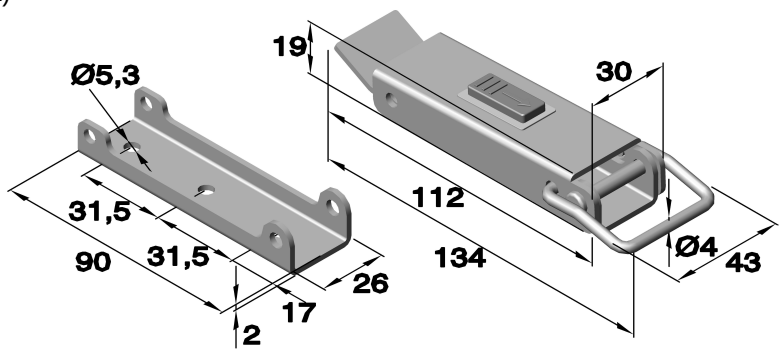

Article no.		
Series	Material	
	Nickel plated	Stainless steel
	Steel	1.4301
1003	.01/6	.30/6

TÜVRheinland ZERTIFIZIERT
Management System
ISO 9001:2015
ISO 14001:2015
www.tuv.com ID 9108624624

Further materials and surface finishes on demand. We will be pleased to give you advice.
Phone: +49 (0) 231 / 725 790 -0 eMail: info@hokon-verschlusstechnik.de
Fax: +49 (0) 231 / 725 790 -10 Homepage: www.hokon-verschlusstechnik.de

Latches
with wire bracket

Art. no.: 1004 (drilled, with click-interlock)

Permitted tractive force: 2000 N
Breaking strength: 4000 N

Suitable strikes: see chapter „B“
Art. no.: 1001._ _/5

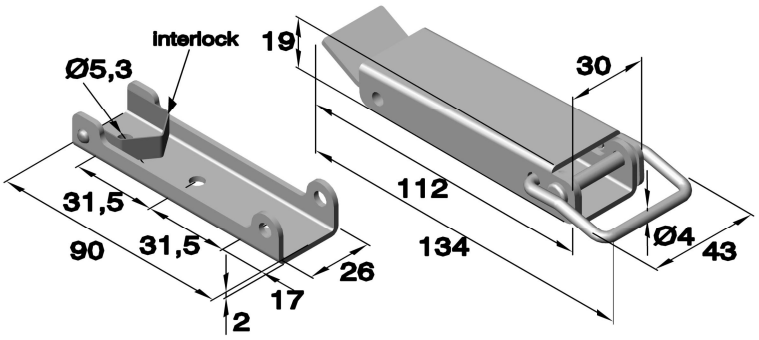

Article no.			
Series	Material		
	Nickel plated	Zinc plated	Stainless steel
	Steel	Steel	1.4301
1004	.01/6	.04/6	.30/6

Art. no.: 1006 (drilled)

Permitted tractive force: 1500 N
Breaking strength: 3000 N

Suitable strikes: see chapter „B“
Art. no.: 1006._ _/5

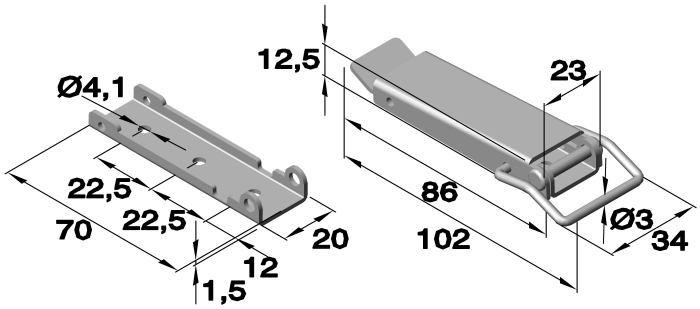

Article no.				
Series	Material			
	Raw	Nickel plated	Zinc plated	Stainless steel
	Steel	Steel	Steel	1.4301
1006	.00/6	.01/6	.04/6	.30/6

Art. no.: 1007 (drilled, with secondary loop lock)

Permitted tractive force: 1500 N
Breaking strength: 3000 N

Suitable strikes: see chapter „B“
Art. no.: 1006._ _/5

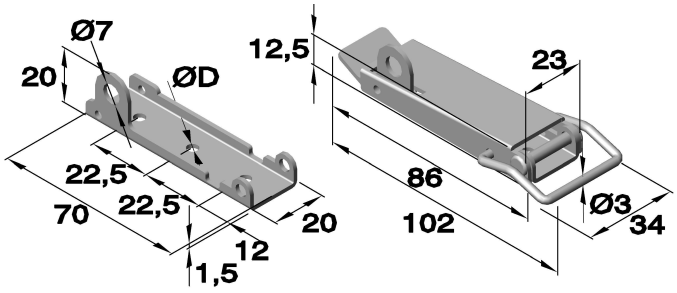

Article no.				
Series	Material			
	Raw	Nickel plated	Zinc plated	Stainless steel
	Steel	Steel	Steel	1.4301
1007	.00/6	.01/6	.04/6	.30/6

Latches
with wire bracket

Art. no.: 1008 (drilled)

Permitted tractive force: 400 N
Breaking strength: 1000 N

Suitable strikes: see chapter „B“
Art. no.: 1008._ _/5

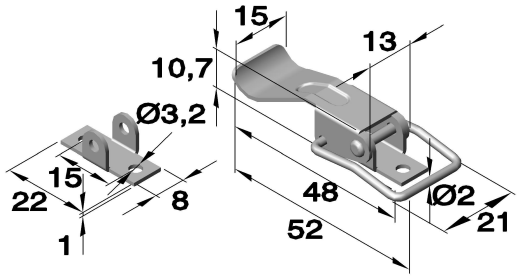

Article no.				
Series	Material			
	Raw	Nickel plated	Zinc plated	Stainless steel
	Steel	Steel	Steel	1.4301
1008	.00/6	.01/6	.04/6	.30/6

Art. no.: 1009 (drilled)

Permitted tractive force: 550 N
Breaking strength: 1500 N

Suitable strikes: see chapter „B“
Art. no.: 1009._ _/5

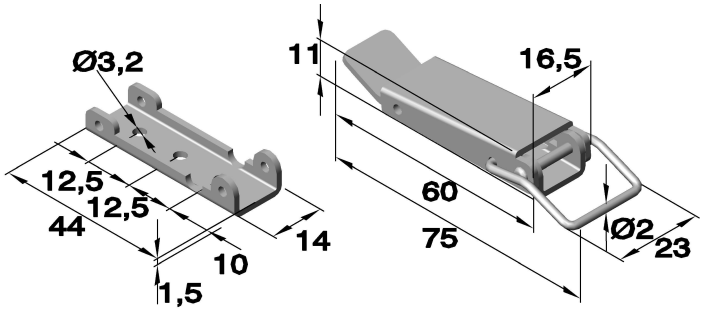

Article no.				
Series	Material			
	Raw	Nickel plated	Zinc plated	Stainless steel
	Steel	Steel	Steel	1.4301
1009	.00/6	.01/6	.04/6	.30/6

Art. no.: 1010 (drilled, with secondary loop lock)

Permitted tractive force: 550 N
Breaking strength: 1500 N

Suitable strikes: see chapter „B“
Art. no.: 1009._ _/5

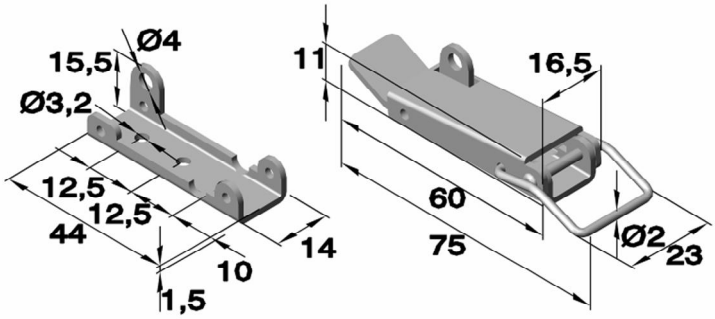

Article no.				
Series	Material			
	Raw	Nickel-plated	Zinc plated	Stainless steel
	Steel	Steel	Steel	1.4301
1010	.00/6	.01/6	.04/6	.30/6

TÜVRheinland ZERTIFIZIERT Management System ISO 9001:2015 ISO 14001:2015 www.tuv.com ID 9108624624

Further materials and surface finishes on demand. We will be pleased to give you advice.
Phone: +49 (0) 231 / 725 790 -0 eMail: info@hokon-verschlusstechnik.de
Fax: +49 (0) 231 / 725 790 -10 Homepage: www.hokon-verschlusstechnik.de

Latches
with wire bracket

Art. no.: 1012 (drilled, with safety spring)

Permitted tractive force: 550 N
Breaking strength: 1500 N

Suitable strikes: see chapter „B“
Art. no.: 1009._ _/5

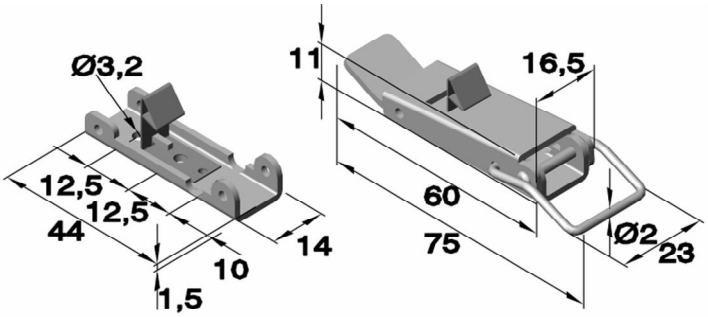

Article no.		
Series	Material	
	Zinc plated	Stainless steel
	Steel	1.4301
1012	.04/6	.30/6

Art. no.: 1013 (drilled)

Permitted tractive force: 550 N
Breaking strength: 1500 N

Suitable strikes: see chapter „B“
Art. no.: 1013._ _/5

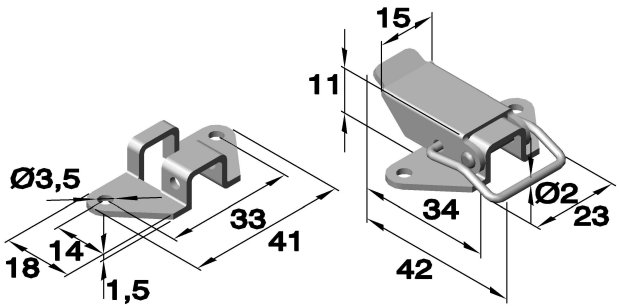

Article no.				
Series	Material			
	Steel	Nickel plated	Zinc plated	Stainless steel
	Steel	Steel	Steel	1.4301
1013	.00/6	.01/6	.04/6	.30/6

Art. no.: 1014 (drilled, with secondary loop locks)

Permitted tractive force: 550 N
Breaking strength: 1500 N

Suitable strikes: see chapter „B“
Art. no.: 1013._ _/5

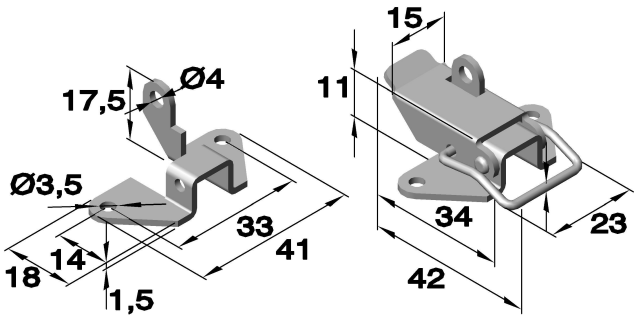

Article no.			
Series	Material		
	Steel	Nickel plated	Zinc plated
	Steel	Steel	Steel
1014	.00/6	.01/6	.04/6

Latches
with wire bracket

Art. no.: 1017 (drilled)

Permitted tractive force: 1000N
Breaking strength: 2500N

Suitable strikes: see chapter „B“
Art. no.: 1015._ _/5

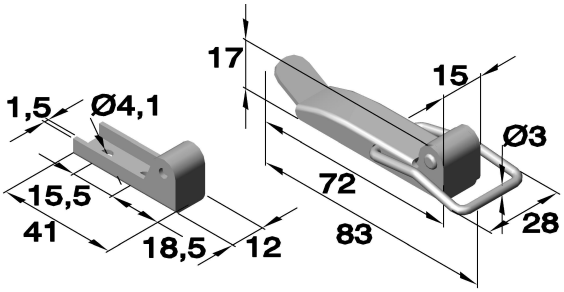

Article no.				
Series	Material			
	Steel	Nickel plated	Zinc plated	Stainless steel
	Steel	Steel	Steel	1.4301
1017	.00/6	.01/6	.04/6	.30/6

Art. no.: 1018 (drilled, with secondary loop locks)

Permitted tractive force: 1000N
Breaking strength: 2500N

Suitable strikes: see chapter „B“
Art. no.: 1015._ _/5

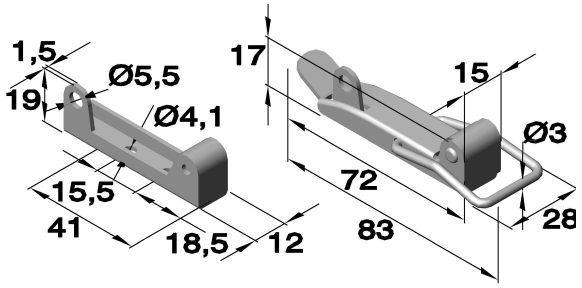

Article no.				
Series	Material			
	Steel	Nickel plated	Zinc plated	Stainless steel
	Steel	Steel	Steel	1.4301
1018	.00/6	.01/6	.04/6	.30/6

Art. no.: 1019

Permitted tractive force: 300N
Breaking strength: 600N

Suitable strikes: see chapter „B“

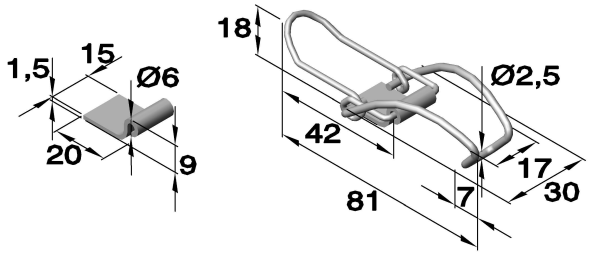

Article no.	
Series	Material
	Zinc plated
	Steel
1019	.04/6

TÜVRheinland ZERTIFIZIERT Management System ISO 9001:2015 ISO 14001:2015 www.tuv.com ID 9108624624

Further materials and surface finishes on demand. We will be pleased to give you advice.
Phone: +49 (0) 231 / 725 790 -0 eMail: info@hokon-verschlusstechnik.de
Fax: +49 (0) 231 / 725 790 -10 Homepage: www.hokon-verschlusstechnik.de

Latches
with wire bracket

Art. no.: 1021 (drilled, with secondary loop locks)

Permitted tractive force: 2000 N
Breaking strength: 3500 N

Suitable strikes: see chapter „B“
Art. no.: 1001._ _/5

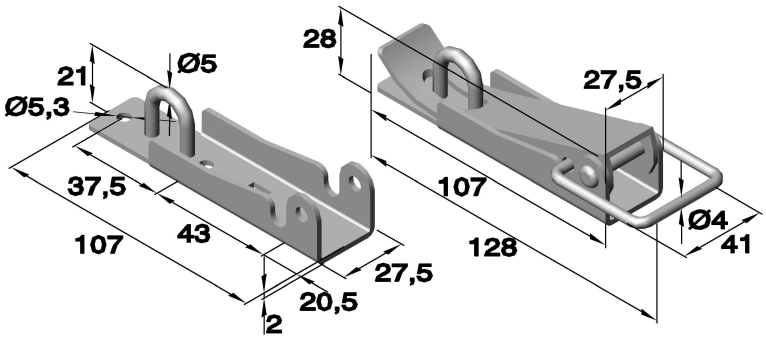

Article no.	
Series	Material
	Zinc plated
	Steel
1021	.04/6

Art. no.: 1022 (drilled)

Permitted tractive force: 1500 N
Breaking strength: 3000 N

Suitable strikes: see chapter „B“
Art. no.: 1039._ _/5

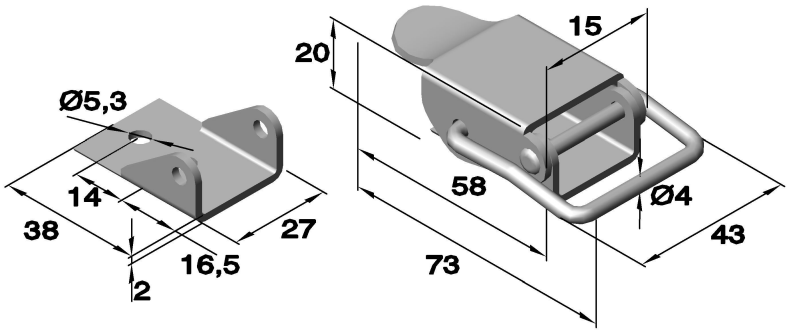

Article no.	
Series	Material
	Zinc plated
	Steel
1022	.04/6

Art. no.: 1023 (drilled)

Permitted tractive force: 400 N
Breaking strength: 1000 N

Suitable strikes: see chapter „B“
Art. no.: 1023._ _/5

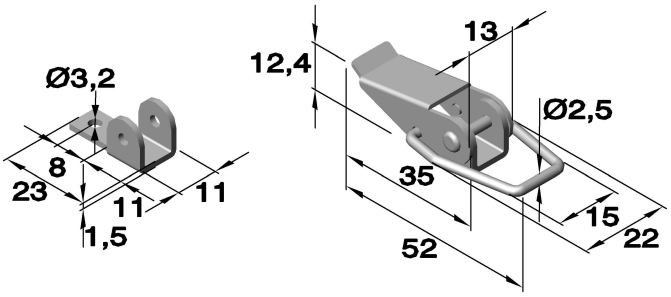

Article no.	
Series	Material
	Zinc plated
	Steel
1023	.04/6

Further materials and surface finishes on demand. We will be pleased to give you advice.
Phone: +49 (0) 231 / 725 790 -0 eMail: info@hokon-verschlusstechnik.de
Fax: +49 (0) 231 / 725 790 -10 Homepage: www.hokon-verschlusstechnik.de

Latches
with wire bracket

Art. no.: 1035 (drilled)

Permitted tractive force: 550 N
Breaking strength: 1000 N

Suitable strikes: see chapter „B“
Art. no.: 1034._ _/5

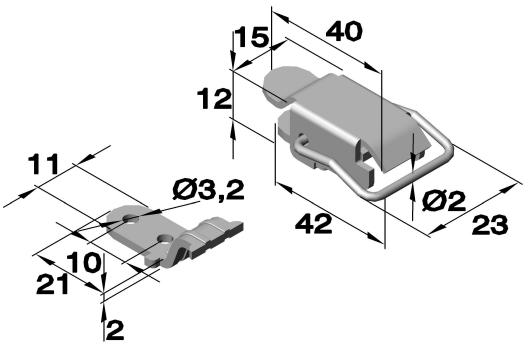

Article no.		
Series	Material	
	Zinc plated	Stainless steel
	Steel	1.4301
1035	.04/6	.30/6

Art. no.: 1037 (drilled)

Permitted tractive force: 150 N
Breaking strength: 300 N

Suitable strikes: see chapter „B“
Art. no.: 1036._ _/5

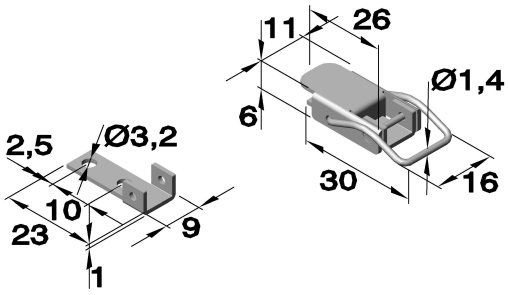

Article no.	
Series	Material
	Zinc plated
	Steel
1037	.04/6

Art. no.: 1039 (drilled)

Permitted tractive force: 1000 N
Breaking strength: 2500 N

Suitable strikes: see chapter „B“
Art. no.: 1039._ _/5

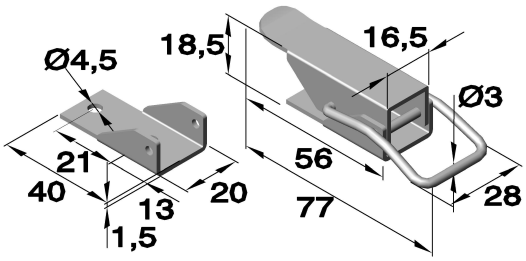

Article no.		
Series	Material	
	Zinc plated	Bronzed
	Steel	Steel
1039	.04/6	.05/6

TÜVRheinland ZERTIFIZIERT
Management System ISO 9001:2015 ISO 14001:2015
www.tuv.com ID 9108624624

Further materials and surface finishes on demand. We will be pleased to give you advice.
Phone: +49 (0) 231 / 725 790 -0 eMail: info@hokon-verschlusstechnik.de
Fax: +49 (0) 231 / 725 790 -10 Homepage: www.hokon-verschlusstechnik.de

Latches
with wire bracket

Art. no.: 1042 (drilled)

Permitted tractive force: 200 N
Breaking strength: 3500 N

Suitable strikes: see chapter „B“

Article no.	
Series	Material
	Zinc plated
	Steel
1042	.04

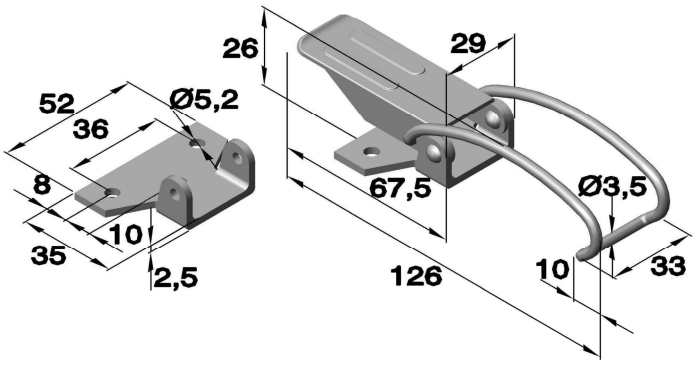

Art. no.: 3001 (drilled)

Suitable strikes: see chapter „B“
Art. no.: 3601._ _

Article no.	
Series	Material
	Zinc plated
	Steel
3001	.04

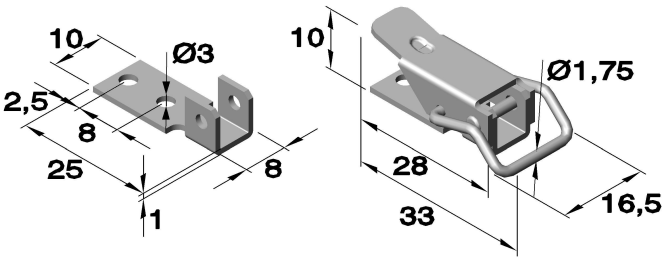

Art. no.: 3002 (drilled)

Suitable strikes: see chapter „B“
Art. no.: 3602._ _

Article no.			
Series	Material		
	Zinc plated	Stainless steel	Polished stainless steel
	Steel	1.4301	1.4301
3002	.04	.30	.33

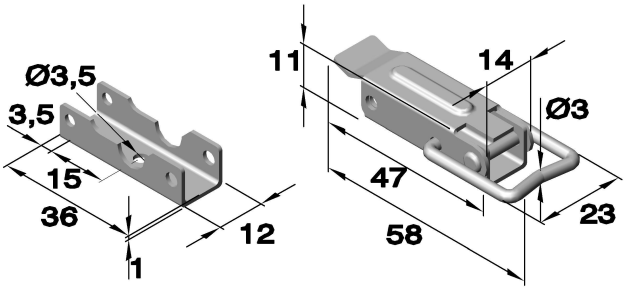

Art. no.: 3003 (drilled)

Suitable strikes: see chapter „B“
Art. no.: 3603._ _

Article no.			
Series	Material		
	Zinc plated	Stainless steel	Polished Stainless steel
	Steel	1.4301	1.4301
3003	.04	.30	.33

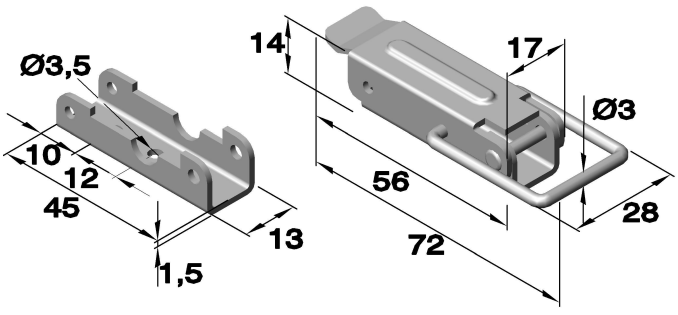

Latches
with wire bracket

Art. no.: 3004 (drilled)

Suitable strikes: see chapter „B“
Art. no.: 3604._ _
Art. no.: 3619._ _

Article no.				
Series	Material			
	Zinc plated	Stainless steel	Polished stainless steel	Stainless steel
	Steel	1.4301	1.4301	Seawater-proof
3004	.04	.30	.33	.35

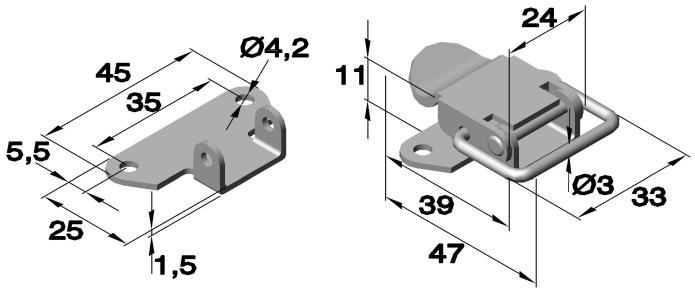

Art. no.: 3005 (drilled and countersunk)

Suitable strikes: see chapter „B“
Art. no.: 3604._ _
Art. no.: 3619._ _

Article no.	
Series	Material
	Zinc plated
	Steel
3005	.04

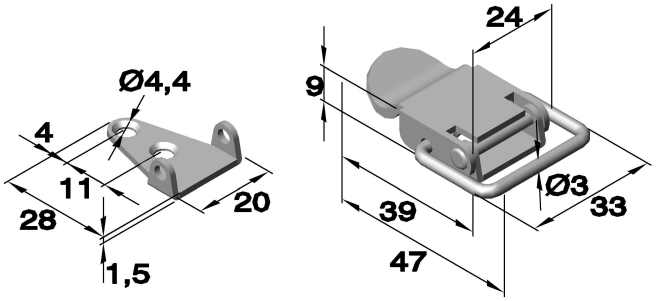

Art. no.: 3006 (drilled)

Suitable strikes: see chapter „B“
Art. no.: 3604._ _
Art. no.: 3619._ _

Article no.	
Series	Material
	Zinc plated
	Steel
3006	.04

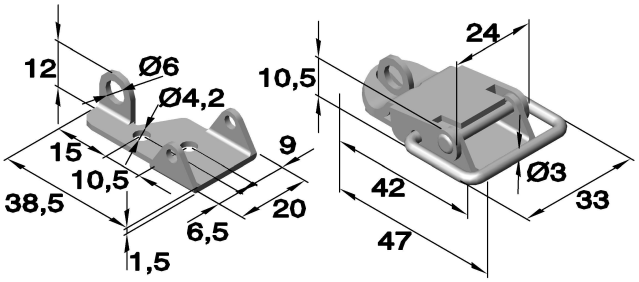

Art. no.: 3007 (drilled)

Suitable strikes: see chapter „B“
Art. no.: 3604._ _ Art. no.: 3610._ _
Art. no.: 3606._ _ Art. no.: 3619._ _

Article no.			
Series	Material		
	Zinc plated	Stainless steel	Polished stainless steel
	Steel	1.4301	1.4301
3007	.04	.30	.33

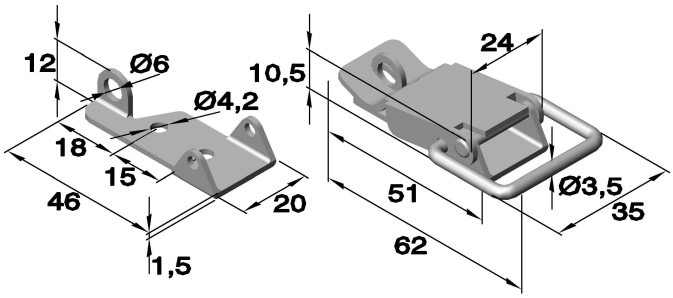

Management System ISO 9001:2015 ISO 14001:2015 TÜVRheinland ZERTIFIZIERT www.tuv.com ID 9108624624

Further materials and surface finishes on demand. We will be pleased to give you advice.
Phone: +49 (0) 231 / 725 790 -0 eMail: info@hokon-verschlusstechnik.de
Fax: +49 (0) 231 / 725 790 -10 Homepage: www.hokon-verschlusstechnik.de

Latches
with wire bracket

Art. no.: 3008 (drilled)

Suitable strikes: see chapter „B“
Art. no.: 3604._ _ Art. no.: 3610._ _
Art. no.: 3606._ _ Art. no.: 3619._ _

Article no.	
Series	Material
	Zinc plated
	Steel
3008	.04

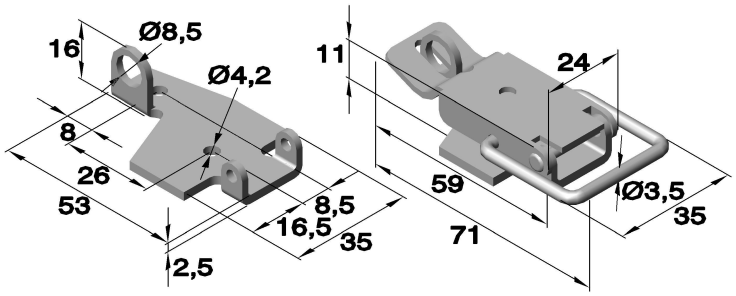

Art. no.: 3009 (drilled)

Suitable strikes: see chapter „B“
Art. no.: 3604._ _ Art. no.: 3610._ _
Art. no.: 3606._ _ Art. no.: 3619._ _

Article no.	
Series	Material
	Zinc plated
	Steel
3009	.04

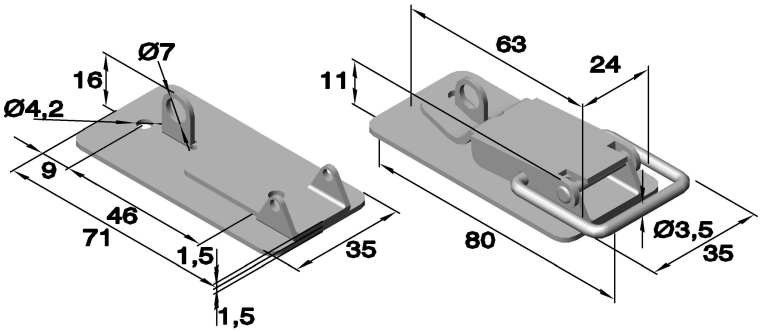

Art. no.: 3011 (drilled)

Suitable strikes: see chapter „B“
Art. no.: 3608._ _ Art. no.: 3622._ _
Art. no.: 3611._ _ Art. no.: 3625._ _
Art. no.: 3612._ _

Article no.	
Series	Material
	Zinc plated
	Steel
3011	.04

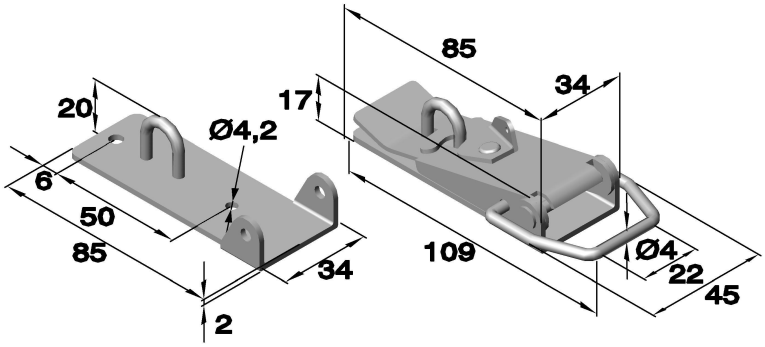

Art.Nr. 3021 (drilled)

Suitable strikes: see chapter „B“
Art.Nr. 3608._ _ Art.Nr. 3622._ _
Art.Nr. 3611._ _ Art.Nr. 3625._ _
Art.Nr. 3612._ _

Article no.	
Series	Material
	Zinc plated
	Steel
3021	.04

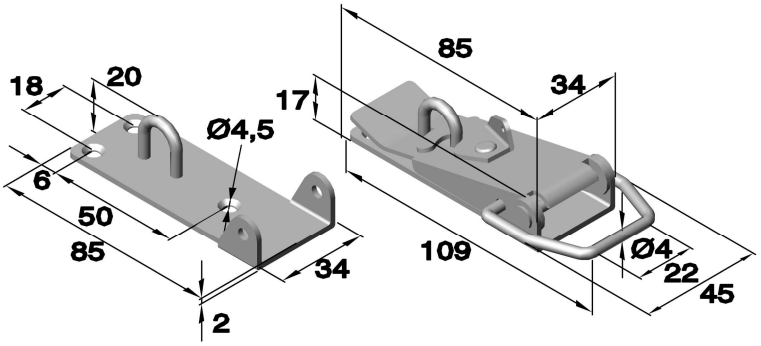

Latches
with wire bracket

Art. no.: 3135 (drilled, with safety spring)

Suitable strikes: see chapter „B“

Article no.	
Series	Material
	Zinc plated
	Steel
3135	.04

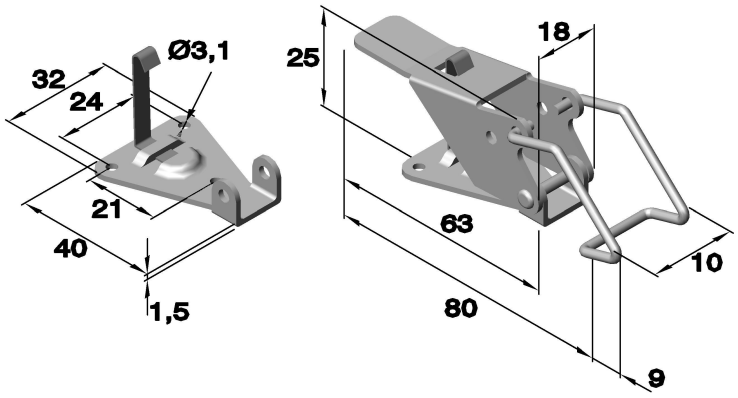

Art. no.: 6370 (drilled and countersunk)
with lock

Suitable strikes: see chapter „B“
Art. no.: 6375.02.04

Article no.		
Series	Material	
	Zinc plated	Raw
	Steel	Stainless steel
6370	.04	.30

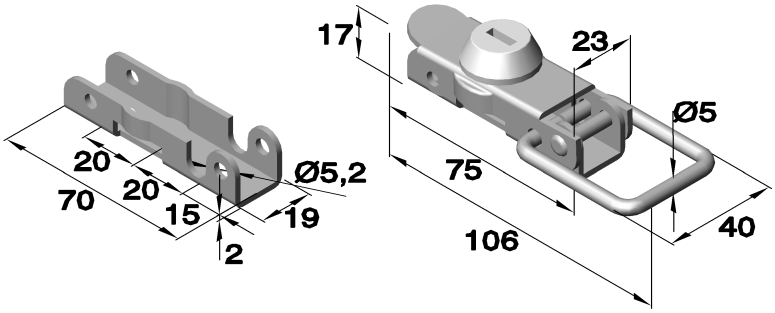

Art.Nr. 1070 (drilled)
with lock

Permitted tractive force: 2000 N
Breaking strength: 4000 N

Suitable strikes: see chapter „B“
Art.no. 1001.__/5

Article no.	
Series	Material
	Zinc plated black
	Steel
1070	.06/6

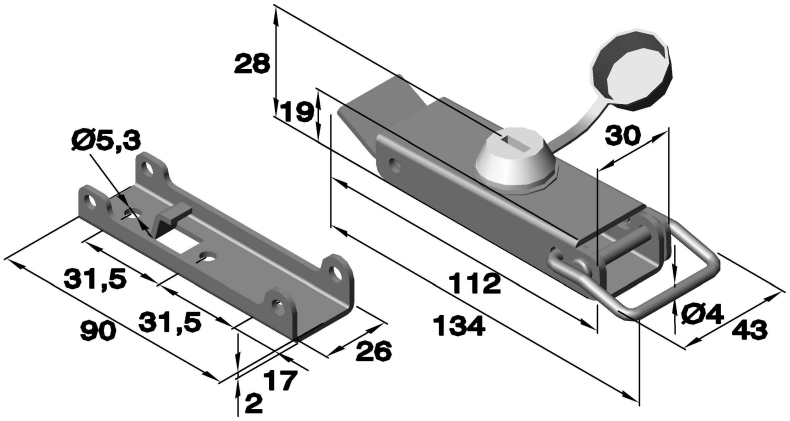

TÜVRheinland ZERTIFIZIERT
Management System
ISO 9001:2015
ISO 14001:2015
www.tuv.com
ID 9108624624

Further materials and surface finishes on demand. We will be pleased to give you advice.
Phone: +49 (0) 231 / 725 790 -0 eMail: info@hokon-verschlusstechnik.de
Fax: +49 (0) 231 / 725 790 -10 Homepage: www.hokon-verschlusstechnik.de

Latches
with wire bracket

Art.Nr. 1429L (drilled)

Tensile load 1500 N
Operating load 1000 N

Article no.		
Series	Material	
	Zinc plated	Raw
	Steel	Stainless steel
1429L02-2-	1AG	1BP

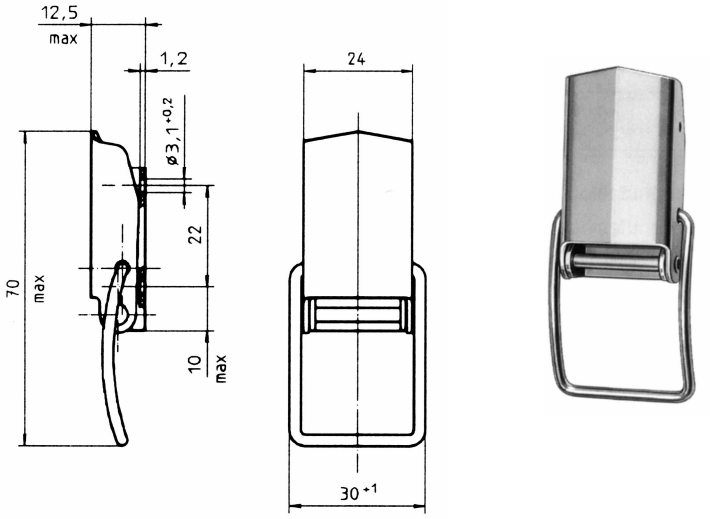

Art.Nr. 1429L (drilled)

Tensile load 1100 N
Operating load 800 N

Article no.		
Series	Material	
	Zinc plated	Raw
	Steel	Stainless steel
1429L02-2X	1AG	1BP

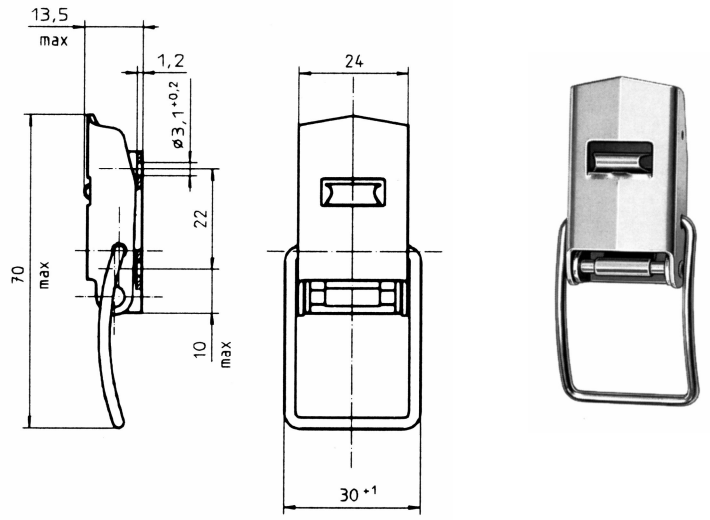

Suitable clamp

Article no.		
Series	Material	
	Zinc plated	Raw
	Steel	Stainless steel
1429L9-	1AG	1BP

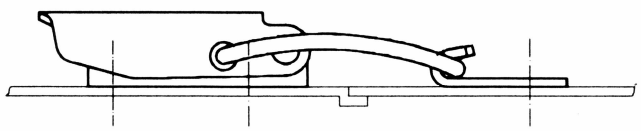

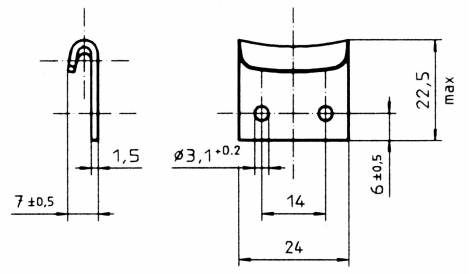



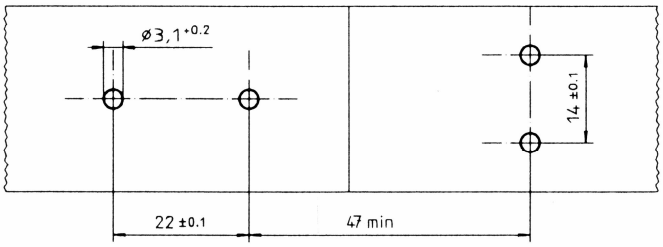

Latches
with wire bracket

Art.Nr. 1429L (drilled)

Tensile load max. 1100 N
Operating load 800 N

Article no.		
Series	Material	
	Zinc plated	Raw
	Steel	Stainless steel
1429L02-3-	1AG	1BP

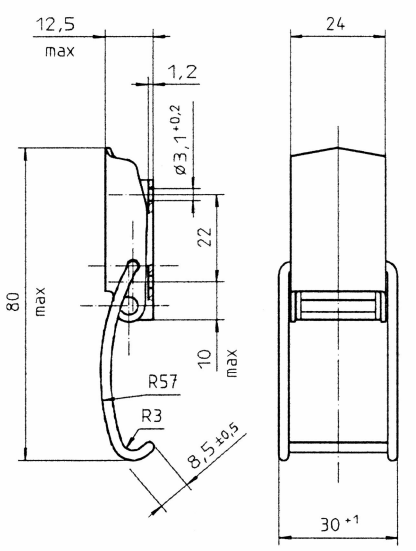



Art.Nr. 1429L (drilled)

Tensile load max. 1100 N
Operating load 800 N

Article no.		
Series	Material	
	Zinc plated	Raw
	Steel	Stainless steel
1429L02-3X	1AG	1BP

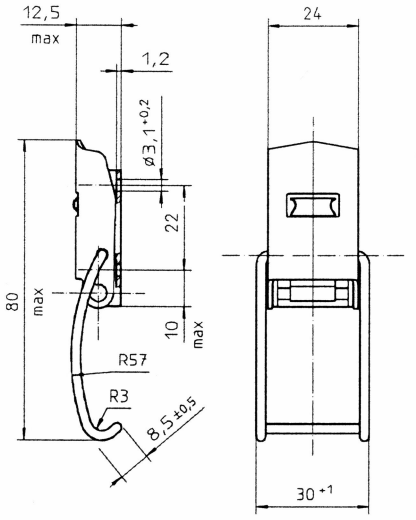

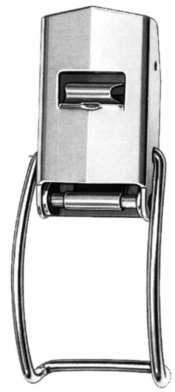

Suitable clamp

Article no.		
Series	Material	
	Zinc plated	Raw
	Steel	Stainless steel
1429L9-	1AG	1BP

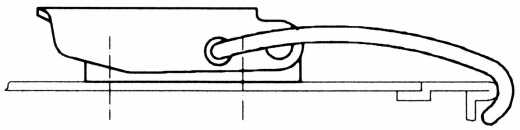

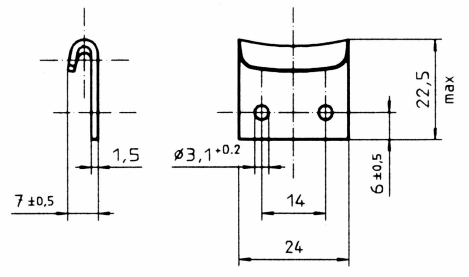



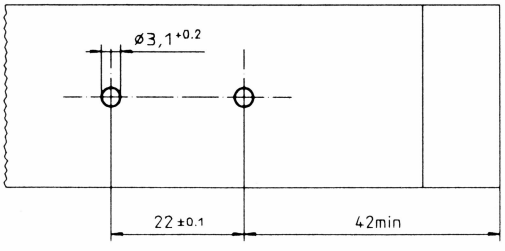

TÜVRheinland ZERTIFIZIERT
Management System
ISO 9001:2015
ISO 14001:2015
www.tuv.com
ID 9108624624

Further materials and surface finishes on demand. We will be pleased to give you advice.
Phone: +49 (0) 231 / 725 790 -0 eMail: info@hokon-verschlusstechnik.de
Fax: +49 (0) 231 / 725 790 -10 Homepage: www.hokon-verschlusstechnik.de

Lockable latches

Art.Nr. 1070 (drilled)
with lock

Permitted tractive force: 2000 N
Breaking strength: 4000 N

Suitable strikes: see chapter „B“
Art.no. 1001.__/5

Article no.	
Series	Material
	Zinc plated black
	Steel
1070	.06/6

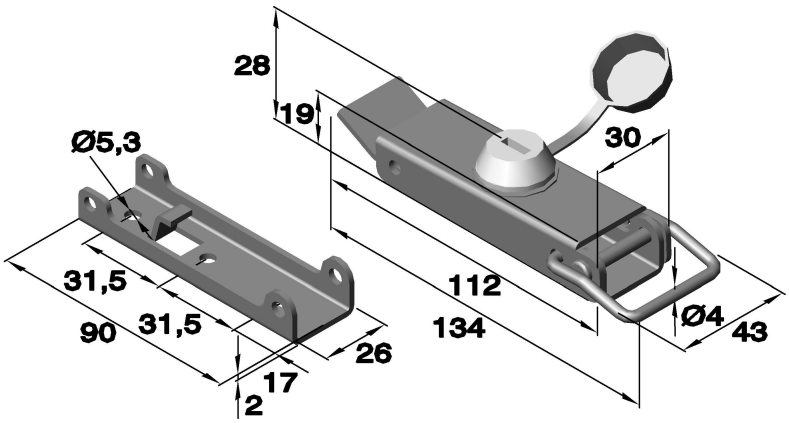

Art. no.: 6370 (drilled and countersunk)
with lock

Suitable strikes: see chapter „B“
Art. no.: 6375.02.04

Article no.		
Series	Material	
	Zinc plated	Raw
	Steel	Stainless steel
6370	.04	.30

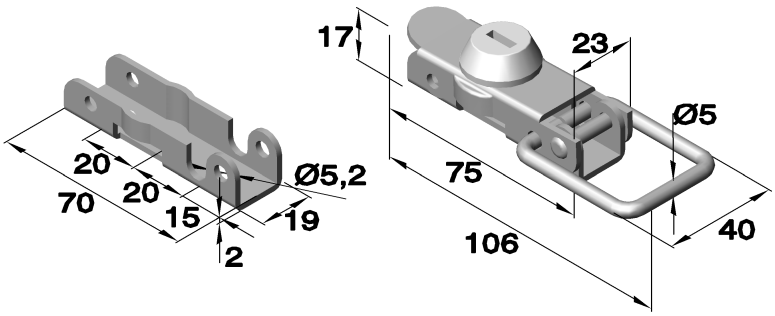

Lockable latches

Art.no.:6344

Strike plate included.

Article no.				Dimension in mm					
Series	Model	Material: Black coated / Zamak		A	B	C	E	F	G
6344	.01	.50	with lock	64,5	26,5	17,3	13	12	30
6344	.02	.50	without lock	64,5	26,5	17,3	13	12	30
6344	.03	.50	with lock	76	32	21	16,8	16	35,5
6344	.04	.50	without lock	76	32	21	16,8	16	35,5



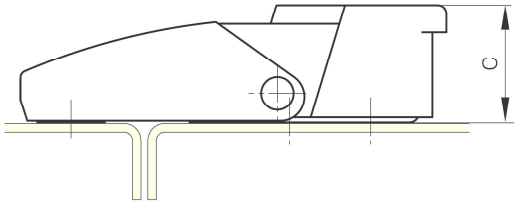

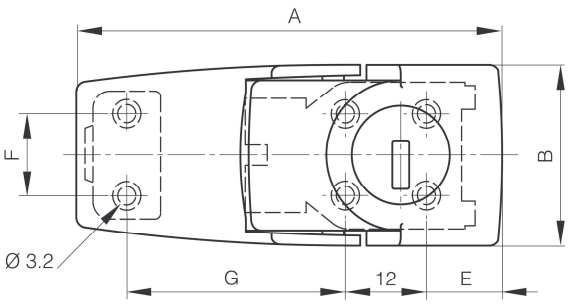

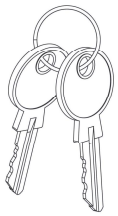

Art.no.:6332

Strike plate included.

Article no.		Dimension in mm					
Series	Material: black coated / Zamak	A	B	C	E	F	G
6332	.50	92	36	25	12	12	28-32



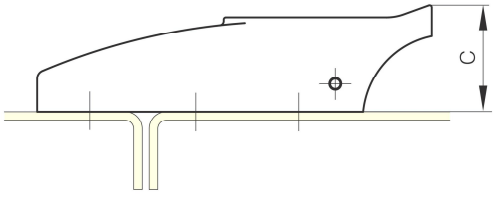

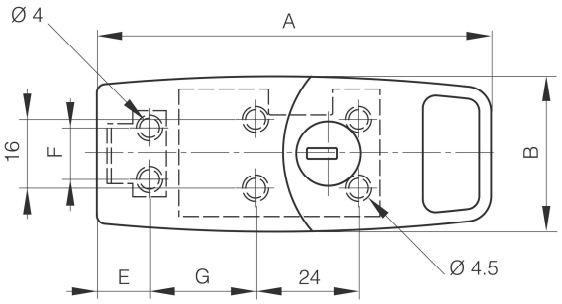



Management System ISO 9001:2015 ISO 14001:2015 TÜVRheinland ZERTIFIZIERT www.tuv.com ID 9108624624

Weitere Materialien und Oberflächenbehandlungen auf Anfrage. Wir beraten Sie gerne!
Phone: +49 (0) 231 / 725 790 -0 eMail: info@hokon-verschlusstechnik.de
Fax: +49 (0) 231 / 725 790 -10 Homepage: www.hokon-verschlusstechnik.de

Adjustable latches


Art.: 1015


Art.: 1016


Art.: 1024


Art.: 1025


Art.: 1027


Art.: 1028


Art.: 1029


Art.: 1030


Art.: 1031


Art.: 1032


Art.: 1033


Art.: 1038


Art.: 3012


Art.: 3013


Art.: 3014


Art.: 3015


Art.: 3016


Art.: 3017


Art.: 3018


Art.: 3019

Adjustable latches

Art. no.: 1015 (drilled)

Permitted tractive force: 1100N
Breaking strength: 2500N

Suitable clamps: see chapter „B“
Art. no.: 1015._ _/5

Article no.				
Series	Material			
	Steel	Nickel plated	Zinc plated	Stainless steel
	Steel	Steel	Steel	1.4301
1015	.00/6	.01/6	.04/6	.30/6

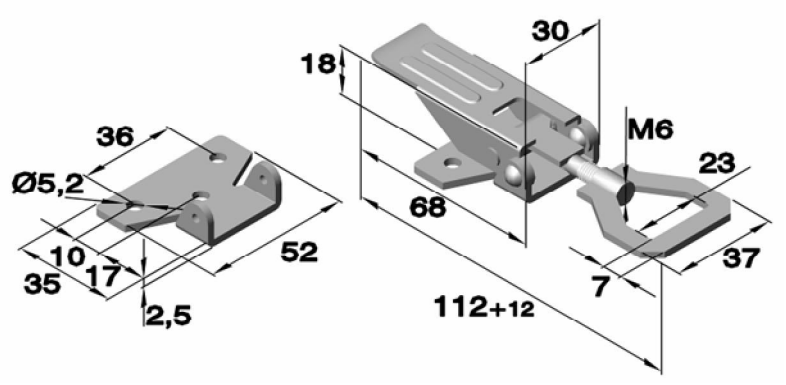

Art. no.: 1016 (drilled)
with safety interlock

Permitted tractive force: 1100N
Breaking strength: 2500N

Suitable clamps: see chapter „B“
Art. no.: 1015._ _/5

Article no.		
Series	Material	
	Nickel-plated	Stainless steel
	Steel	1.4301
1016	.01/6	.30/6

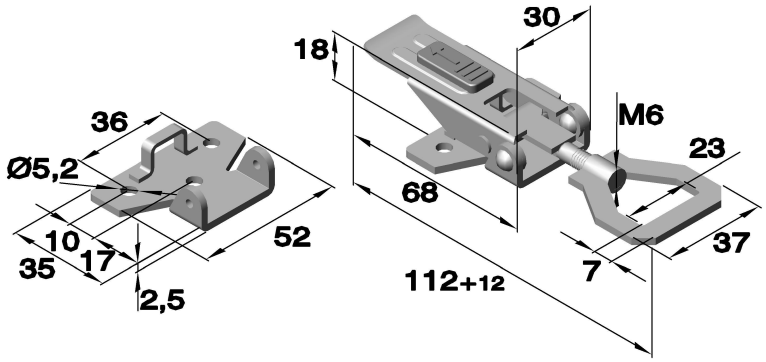

Art. no.: 1024 (drilled)

Permitted tractive force: 1500N
Breaking strength: 3000 N

Suitable clamps: see chapter „B“
Art. no.: 1024._ _/5

Article no.		
Series	Material	
	Zinc plated	Raw
	Steel	Stainless steel
1024	.04/6	.30/6

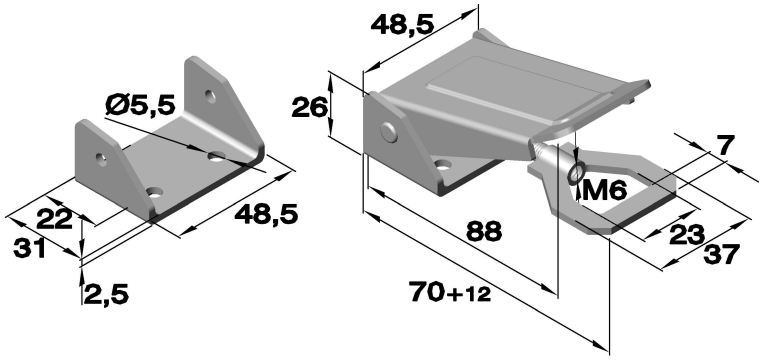

Management System ISO 9001:2015 ISO 14001:2015 TÜVRheinland ZERTIFIZIERT www.tuv.com ID 9108624624

Further materials and surface finishes on demand. We will be pleased to give you advice.
Phone: +49 (0) 231 / 725 790 -0 eMail: info@hokon-verschlusstechnik.de
Fax: +49 (0) 231 / 725 790 -10 Homepage: www.hokon-verschlusstechnik.de

Adjustable latches

Art. no.: 1025 (drilled)
with lock bracket

Permitted tractive force: 1500N
Breaking strength: 3000N

Suitable clamps: see chapter „B“
Art. no.: 1024._ _/5

Article no.	
Series	Material
	Zinc plated
	Steel
1025	.04/6

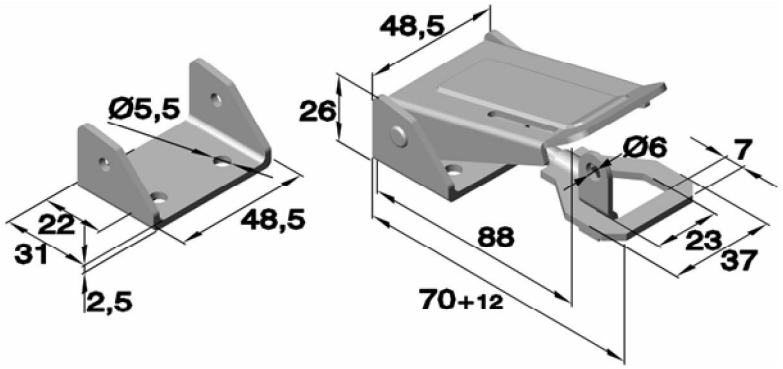

Art. no.: 1027 (drilled)

Permitted tractive force: 1000N
Breaking strength: 2000N

Suitable clamps: see chapter „B“
Art. no.: 1027._ _/5

Article no.		
Series	Material	
	Nickel-plated	Zinc plated
	Steel	Steel
1027	.01/6	.04/6

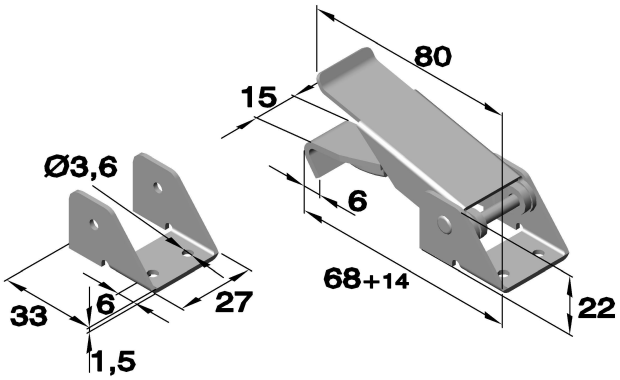

Art. no.: 1028 (drilled)
with safety spring

Permitted tractive force: 1000N
Breaking strength: 2000N

Suitable clamps: see chapter „B“
Art. no.: 1027._ _/5

Article no.	
Series	Material
	Zinc plated
	Steel
1028	.04/6

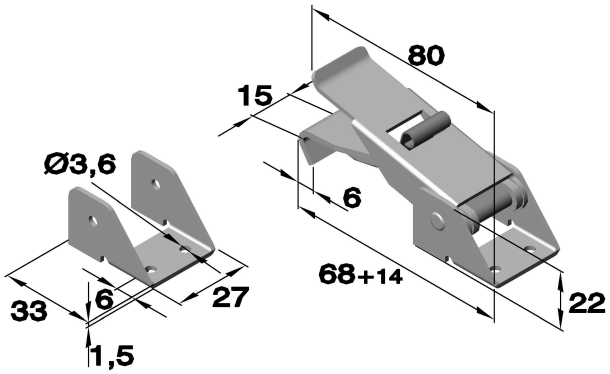

Adjustable latches

Art. no.: 1029 (drilled)

Permitted tractive force: 2000N
Breaking strength: 4000N

Suitable clamps: see chapter „B“
Art. no.: 1029._ _/5

Article no.	
Series	Material
	Zinc plated
	Steel
1029	.04/6

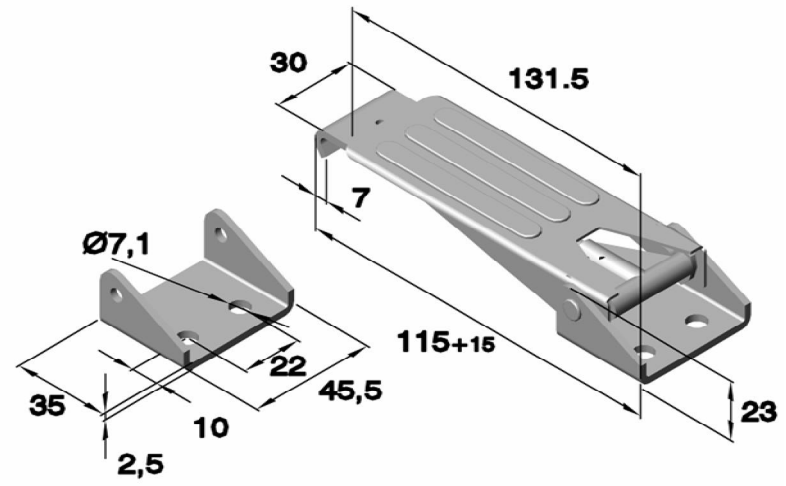

Art. no.: 1030 (drilled)
with secondary loop lock

Permitted tractive force: 2000N
Breaking strength: 4000N

Suitable clamps: see chapter „B“
Art. no.: 1029._ _/5

Article no.	
Series	Material
	Zinc plated
	Steel
1030	.04/6

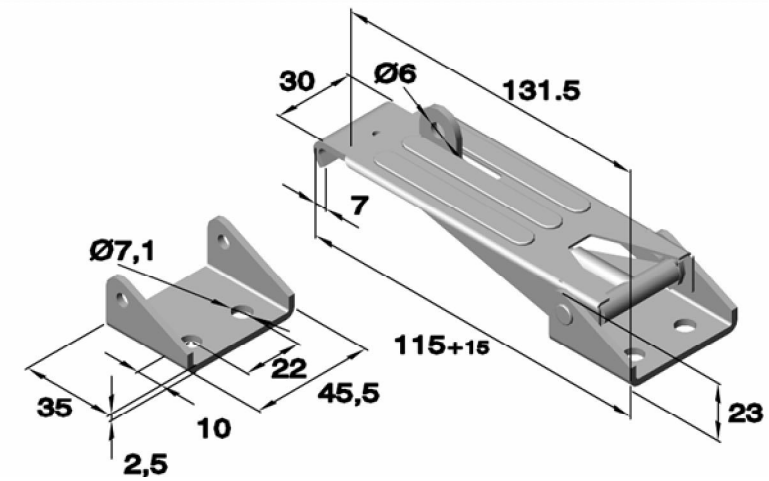

Art. no.: 1031 (drilled)

Permitted tractive force: 1000N
Breaking strength: 1400N

Suitable clamps: see chapter „B“
Art. no.: 1031._ _/5

Article no.		
Series	Material	
	Zinc plated	Stainless steel
	Steel	1.4301
1031	.04/6	.30/6

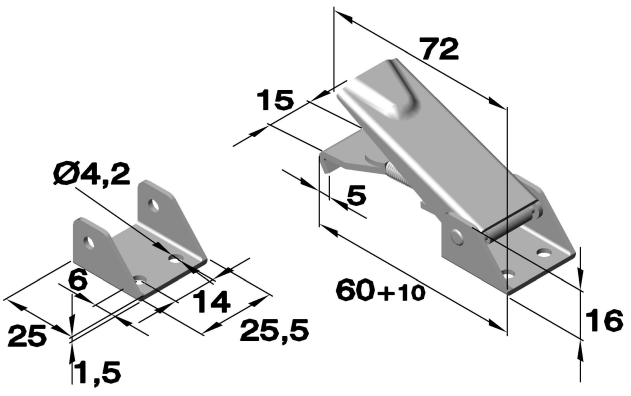

Management System ISO 9001:2015 ISO 14001:2015 TÜVRheinland ZERTIFIZIERT www.tuv.com ID 9108624624

Further materials and surface finishes on demand. We will be pleased to give you advice.
Phone: +49 (0) 231 / 725 790 -0 eMail: info@hokon-verschlusstechnik.de
Fax: +49 (0) 231 / 725 790 -10 Homepage: www.hokon-verschlusstechnik.de

Adjustable latches

Art. no.: 1032 (drilled)
with secondary loop lock

Permitted tractive force: 1000N
Breaking strength: 1400N

Suitable clamps: see chapter „B“
Art. no.: 1031._ _/5

Article no.		
Series	Material	
	Zinc plated	Stainless steel
	Steel	1.4301
1032	.04/6	.30/6

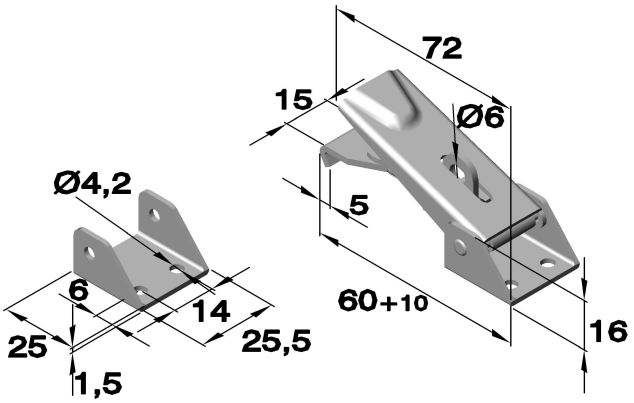

Art. no.: 1033 (drilled)
with safety spring

Permitted tractive force: 1000N
Breaking strength: 1400N

Suitable clamps: see chapter „B“
Art. no.: 1031._ _/5

Article no.		
Series	Material	
	Zinc plated	Stainless steel
	Steel	1.4301
1033	.04/6	.30/6

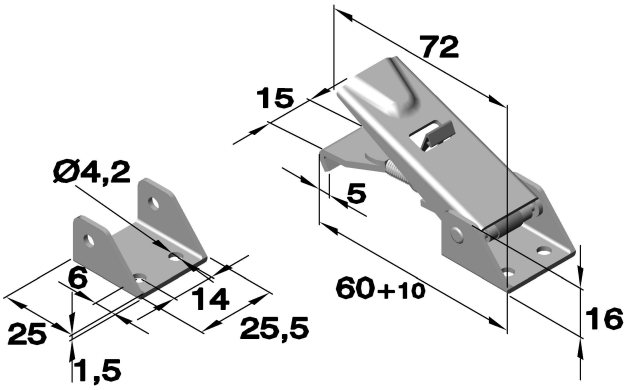

Art. no.: 1038 (drilled)

Permitted tractive force: 750N
Breaking strength: 1500N

Suitable clamps: see chapter „B“
Art. no.: 1038._ _/5

Article no.	
Series	Material
	Zinc plated
	Steel
1038	.04/6

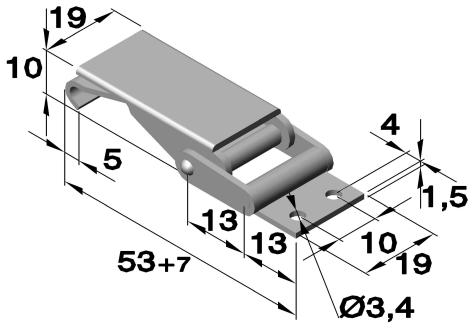

Adjustable latches

Art. no.: 3012 (drilled and countersunk)

Suitable clamps: see chapter „B“
Art. no.: 3605._ _
Art. no.: 3616._ _
Art. no.: 3618._ _

Article no.			
Series	Material		
	Zinc plated	Stainless steel	Polished stainless steel
	Steel	1.4301	1.4301
3012	.04	.30	.33

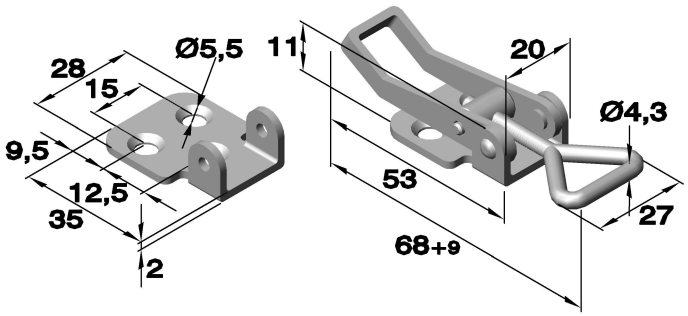

Art. no.: 3013 (drilled and countersunk) with padlock

Suitable clamps: see chapter „B“
Art. no.: 3605._ _
Art. no.: 3616._ _
Art. no.: 3618._ _

Article no.			
Series	Material		
	Zinc plated	Stainless steel	Stainless steel polished
	Steel	1.4301	1.4301
3013	.04	.30	.33

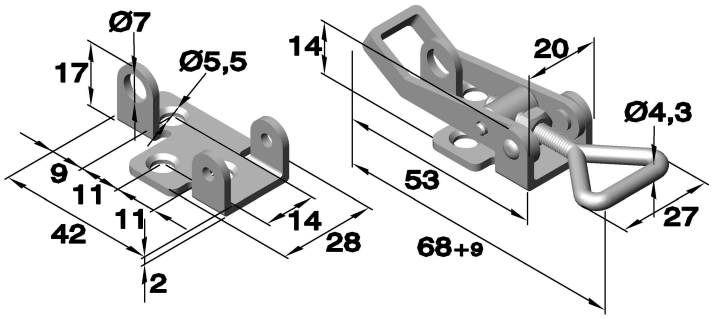

Art. no.: 3014 (drilled and countersunk)

Suitable clamps: see chapter „B“
Art. no.: 3605._ _
Art. no.: 3616._ _
Art. no.: 3618._ _

Article no.	
Series	Material
	Zinc plated
	Steel
3014	.04

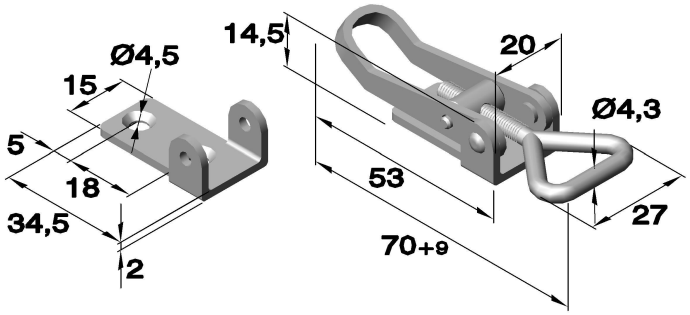

TÜVRheinland ZERTIFIZIERT
Management System ISO 9001:2015 ISO 14001:2015
www.tuv.com ID 9108624624

Further materials and surface finishes on demand. We will be pleased to give you advice.
Phone: +49 (0) 231 / 725 790 -0 eMail: info@hokon-verschlusstechnik.de
Fax: +49 (0) 231 / 725 790 -10 Homepage: www.hokon-verschlusstechnik.de

Adjustable latches

Art.no.: 3014.__-U1

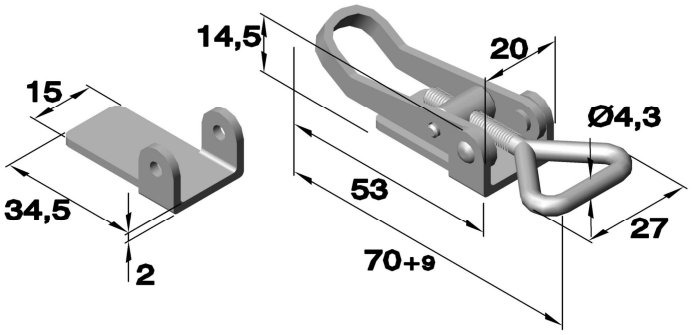

Suitable clamps: see chapter „B“
Art.no. 3605._ _
Art.no. 3616._ _
Art.no. 3618._ _

Article no.	
Series	Material
	Zinc plated
	Steel
3014	.04-U1

Art.no. 3014.__-U1S (with welding projection)

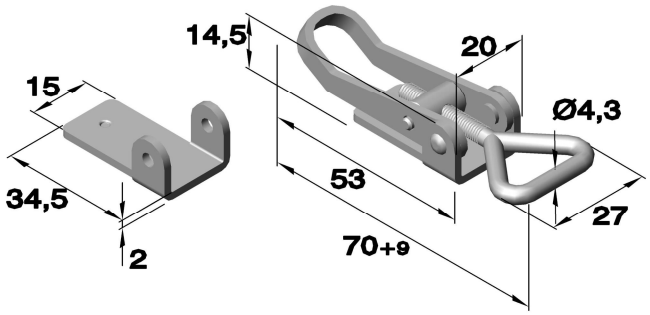

Suitable clamps: see chapter „B“
Art.no. 3605._ _
Art.no. 3616._ _
Art.no. 3618._ _

Article no.	
Series	Material
	Zinc plated
	Steel
3014	.04-U1S

Art. no.: 3015 (drilled and countersunk) with riveted triangle

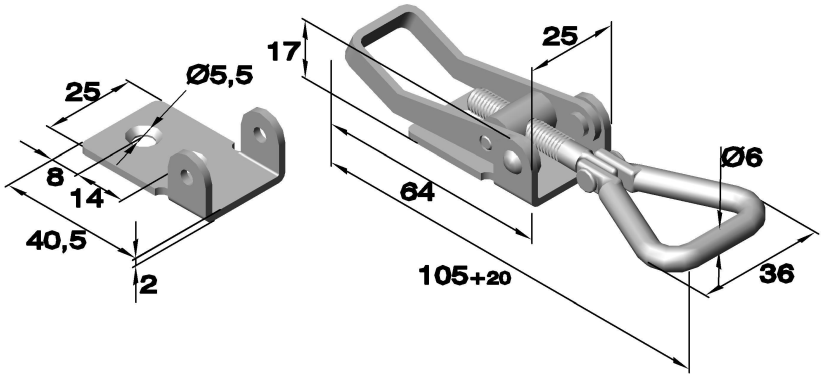

Suitable clamps: see chapter „B“
Art. no.3608._ _ Art. no.: 3622._ _
Art. no.: 3611._ _ Art. no.: 3625._ _
Art. no.: 3612._ _

Article no.	
Series	Material
	Zinc plated
	Steel
3015	.04

Adjustable latches

Art. no.: 3015.__ (drilled and countersunk)
with welded triangle

Suitable clamps: see chapter „B“
Art. no.: 3608._ _ Art. no.: 3622._ _
Art. no.: 3611._ _ Art. no.: 3625._ _
Art. no.: 3612._ _

Article no.	
Series	Material
	Stainless steel
	1.4301
3015	.30

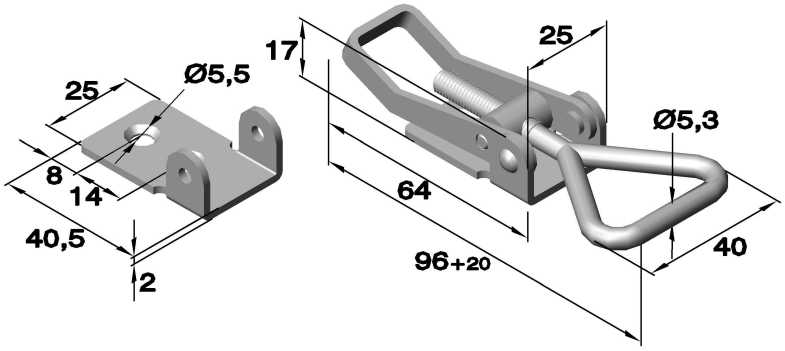

Art. no.: 3015.__
with riveted triangle

Suitable clamps: see chapter „B“
Art. no.: 3608._ _ Art. no.: 3622._ _
Art. no.: 3611._ _ Art. no.: 3625._ _
Art. no.: 3612._ _

Article no.		
Series	Material	
	Zinc plated	Stainless steel polished
	Steel	1.4301
3015	.04 G-1	.33 RF-1

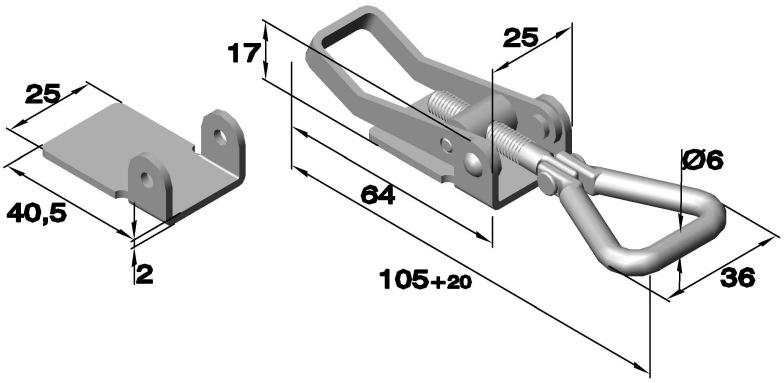

Art. no.: 3016 (drilled and countersunk)
with riveted triangle

Suitable clamps: see chapter „B“
Art. no.3608._ _ Art. no.: 3622._ _
Art. no.: 3611._ _ Art. no.: 3625._ _
Art. no.: 3612._ _

Article no.	
Series	Material
	Zinc plated
	Steel
3016	.04

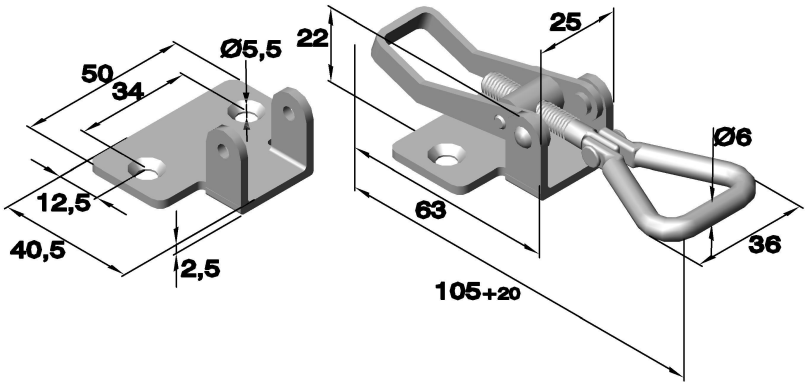

TÜVRheinland ZERTIFIZIERT Management System ISO 9001:2015 ISO 14001:2015 www.tuv.com ID 9108624624

Further materials and surface finishes on demand. We will be pleased to give you advice.
Phone: +49 (0) 231 / 725 790 -0 eMail: info@hokon-verschlusstechnik.de
Fax: +49 (0) 231 / 725 790 -10 Homepage: www.hokon-verschlusstechnik.de

Adjustable latches

Art. no.: 3016.__-U1
with riveted triangle

Suitable clamps: see chapter „B“
Art. no.3608._ _ Art. no.: 3622._ _
Art. no.: 3611._ _ Art. no.: 3625._ _
Art. no.: 3612._ _

Article no.		
Series	Material	
	Zinc plated	Stainless steel polished
	Steel	1.4301
3016	.04-U1	.30-U1

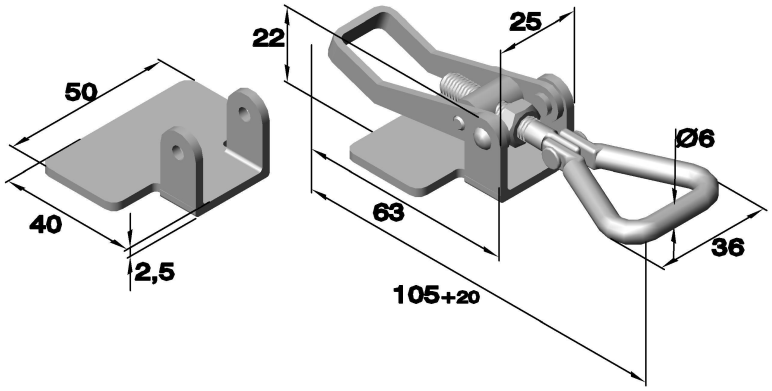

Art. no.: 3017
with riveted triangle

Suitable clamps: see chapter „B“
Art. no.3609._ _

Article no.	
Series	Material
	Zinc plated
	Steel
3017	.04

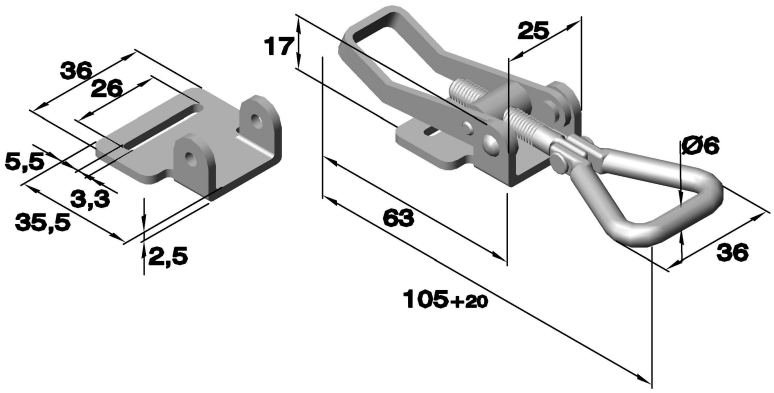

Art. no.: 3018 (drilled and countersunk)
with riveted triangle

Suitable clamps: see chapter „B“
Art. no.: 3608._ _ Art. no.: 3622._ _
Art. no.: 3611._ _ Art. no.: 3625._ _
Art. no.: 3612._ _

Article no.	
Series	Material
	Zinc plated
	Steel
3018	.04

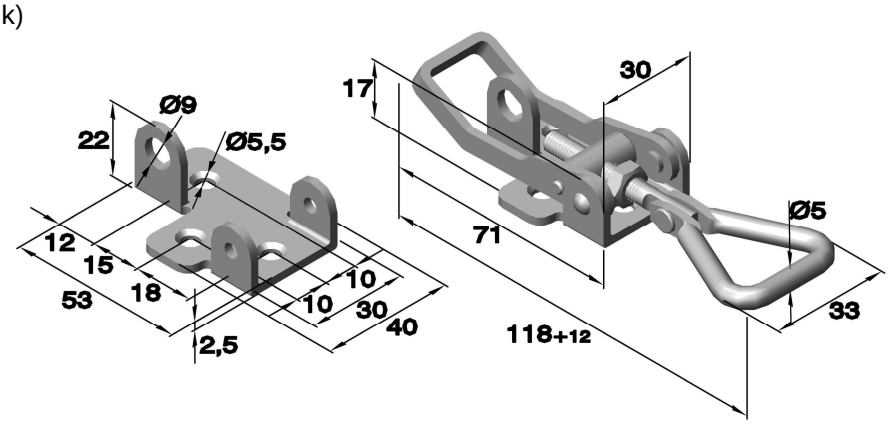

Adjustable latches

Art. no.: 3018 (drilled and countersunk)
with welded triangle

Suitable clamps: see chapter „B“
Art. no.: 3608._ _ Art. no.: 3622._ _
Art. no.: 3611._ _ Art. no.: 3625._ _
Art. no.: 3612._ _

Article no.	
Series	Material
	Polished
	Edelstahl
3018	.30

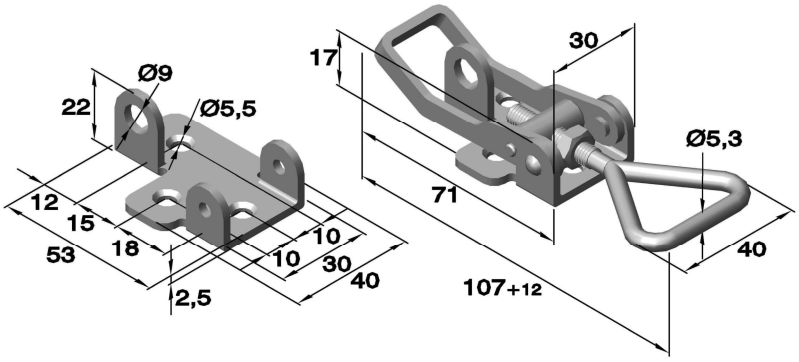

Art. no.: 3019 (drilled and countersunk)
with riveted triangle

Suitable clamps: see chapter „B“
Art. no.: 3608._ _ Art. no.: 3622._ _
Art. no.: 3611._ _ Art. no.: 3625._ _
Art. no.: 3612._ _

Article no.	
Series	Material
	Zinc plated
	Steel
3019	.04

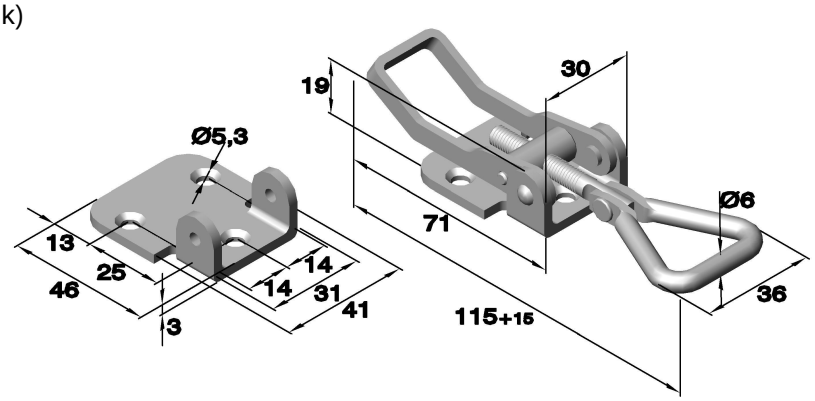

Art. no.: 3019 (drilled and countersunk)
with riveted triangle

Suitable clamps: see chapter „B“
Art. no.: 3608._ _ Art. no.: 3622._ _
Art. no.: 3611._ _ Art. no.: 3625._ _
Art. no.: 3612._ _

Article no.		
Series	Material	
	Stainless steel	Polished
	Stainless steel	Stainless steel
3019	.30	.33

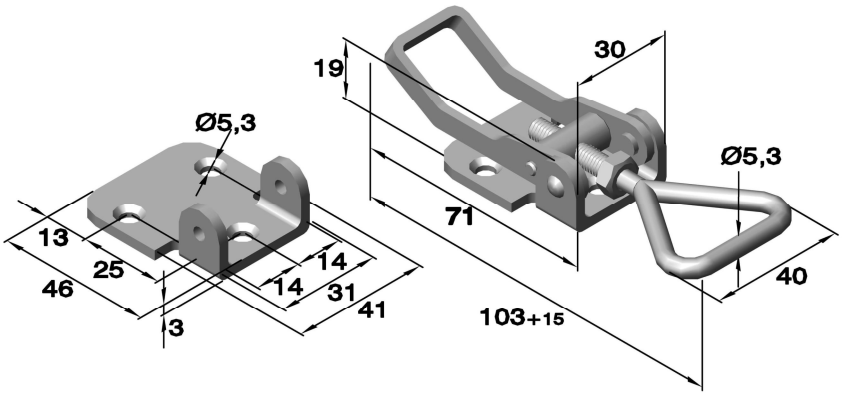

TÜVRheinland ZERTIFIZIERT
Management System
ISO 9001:2015
ISO 14001:2015
www.tuv.com
ID 9108624624

Further materials and surface finishes on demand. We will be pleased to give you advice.
Phone: +49 (0) 231 / 725 790 -0 eMail: info@hokon-verschlusstechnik.de
Fax: +49 (0) 231 / 725 790 -10 Homepage: www.hokon-verschlusstechnik.de

Adjustable latches

Art.no. V951L02 (drilled)

Tensile load max. 2300 N
Operating load up to 1550 N

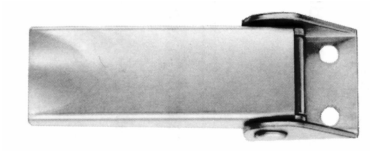

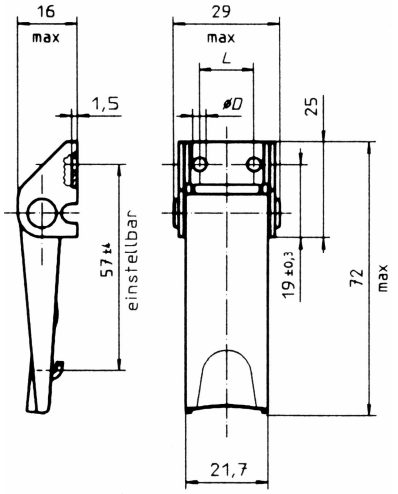

Article no.				Dimensions in mm	
Series	Material			D	L
	Zinc plated	Chromated	Raw		
	Steel	Steel	Stainless steel		
V951L02-1-	1AGV	1AD	1BP	3,6	14,3
V951L02-1-	5AGV	-	5BP	4,2	12,7
V951L02-1-	2AGV	-	2BP	without bore	-

Art.no. V951L03 (drilled)

Tensile load max.. 1200 N
Operating load up to 800 N

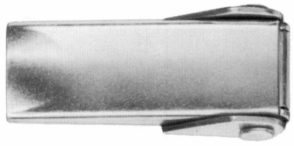

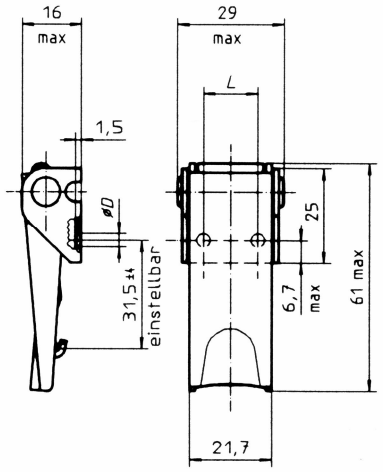

Article no.				Dimensions in mm	
Series	Material			D	L
	Zinc plated	Chromated	Raw		
	Steel	Steel	Stainless steel		
V951L03-1-	1AGV	1AD	1BP	3,6	14,3
V951L03-1-	5AGV	-	5BP	4,2	12,7

Art.no. V951L04 (drilled)

Tensile load max.. 2300 N
Operating load up to 1550 N

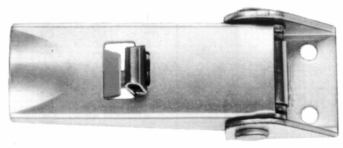

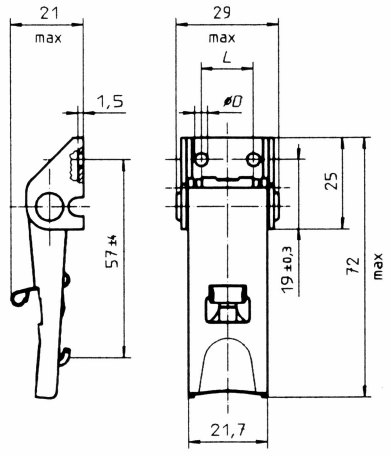

Article no.				Dimensions in mm	
Series	Material			D	L
	Zinc plated	Chromated	Raw		
	Steel	Steel	Stainless steel		
V951L04-1X	1AGV	1AD	1BP	3,6	14,3
V951L04-1X	5AGV	-	5BP	4,2	12,7
V951L04-1X	-	-	2BP	without bore	-

Adjustable latches

Art.no. V951L03 (drilled)

Tensile load max.. 1200 N
Operational load up to 800 N

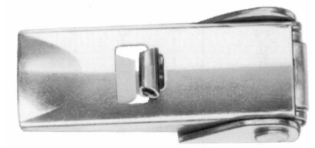

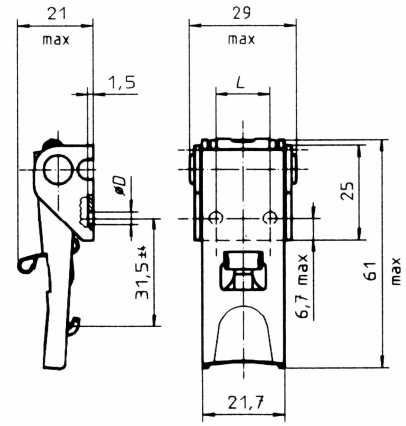

Article no.				Dimensions in mm	
Series	Material			D	L
	Zinc plated	Chromated	Raw		
	Steel	Steel	Stainless steel		
V951L03-1X	-	1AD	1BP	3,6	14,3
V951L03-1X	5AGV	-	5BP	4,2	12,7

Art.no. V951L05 (drilled)

Tensile load max. 2300 N
Operating load up to 1550 N

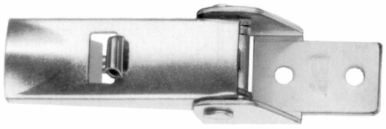

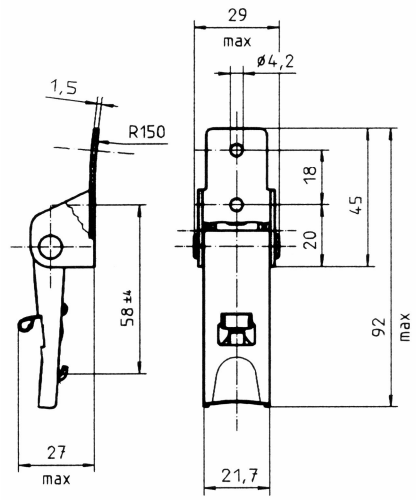

Article no.			Dimensions in mm
Series	Material		D
	Zinc plated	Raw	
	Steel	Stainless steel	
V951L05-1X	1AGV	1BP	4,2
V951L05-1X	-	5BP	5,1

Art.no. V951L01 (drilled)

Tensile load max.. 2300 N
Operating load up to 1550 N

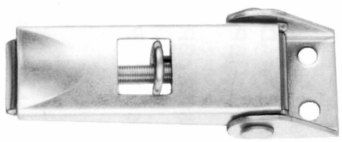

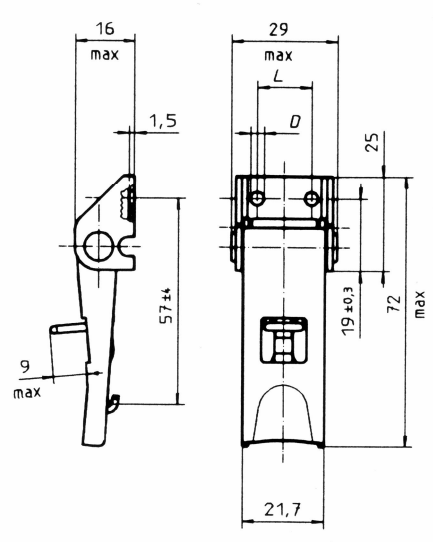

Article no.		Dimensions in mm
Series	Material	D
	Zinc plated	
	Steel	
V951L01-1Y	5AGV	4,2
V951L01-1Y	2AGV	without bore

TÜVRheinland ZERTIFIZIERT Management System ISO 9001:2015 ISO 14001:2015 www.tuv.com ID 9108624624

Further materials and surface finishes on demand. We will be pleased to give you advice.
Phone: +49 (0) 231 / 725 790 -0 eMail: info@hokon-verschlusstechnik.de
Fax: +49 (0) 231 / 725 790 -10 Homepage: www.hokon-verschlusstechnik.de

Adjustable latches

Suitable strike of Series V951L

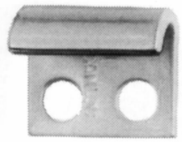

	Zinc plated Chromated	Stainless steel
Tensile load max.	2300 N	1500 N
Operating load	1550 N	1000 N

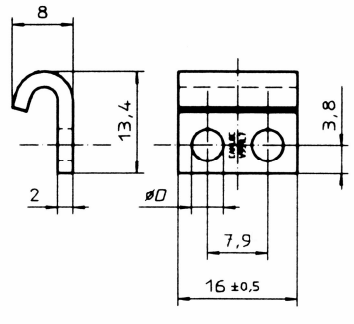

Article no.				Dimensions in mm
Series	Material			D
	Zinc plated	Chromated	Raw	
	Steel	Steel	Stainless steel	
V951L7-	1AGV	1AD	1BP	3,6
V951L7-	5AGV	-	5BP	4,2
V951L7-	2AZ	-	2BP	without bore

Open-base tension latch/ open strike

V951L02-
V951L04-
V951L01-

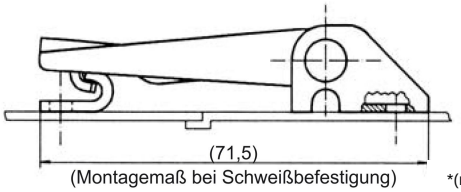

(Montagemaß bei Schweißbefestigung) *(mounting dimension on weld attachement)

V951L7-

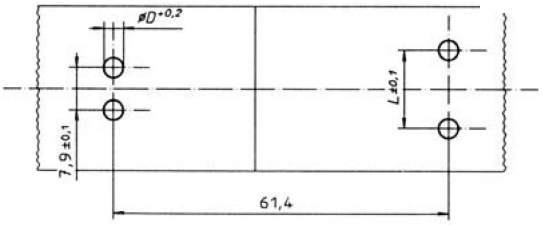

Concealed base tension latch/ open strike

V951L03-

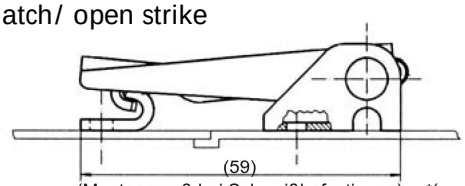

(Montagemaß bei Schweißbefestigung) *(mounting dimension on weld attachement)

V951L7-

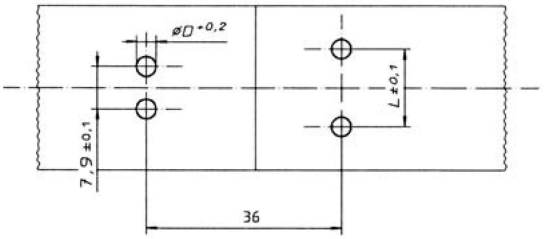

Select diameter D and distance L in accordance with the strike and tension latch.

Adjustable latches

Suitable strike of Series V951L

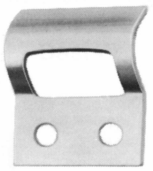

	Zinc plated	Stainless steel
Tensile load max.	2000 N	1500 N
Operating load	1300 N	1000 N

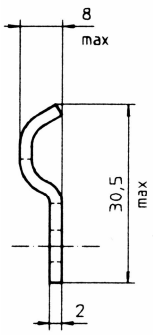

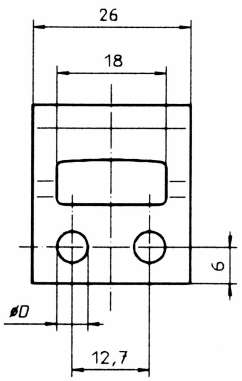

Article no.			Dimensions in mm
Series	Material		D
	Zinc plated	Raw	
	Steel	Stainless steel	
V951L50-	-	2BP	3,6
V951L50-	1AGV	1BP	4,2
V951L50-	-	3BP	without bore

Open-base tension latch/ closed strike

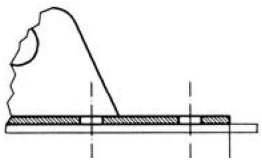

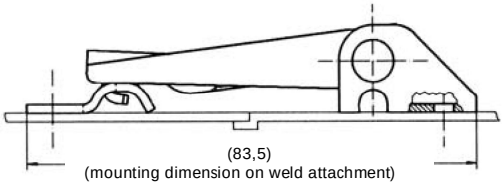

V951L02-
V951L04-
V951L01-

V951L05-

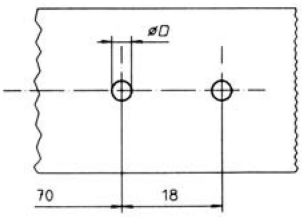

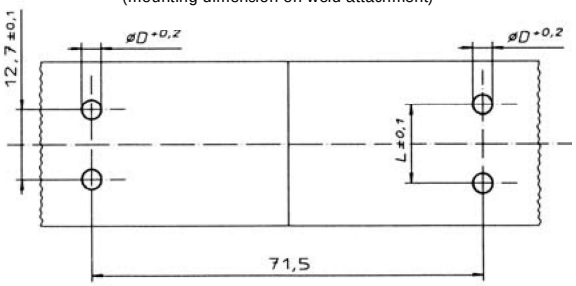

V951L50-

Concealed-base tension latch/ closed strike

V951L03-

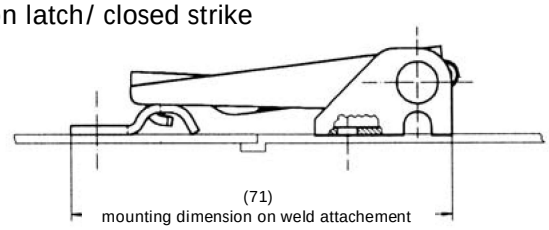

V951L50-

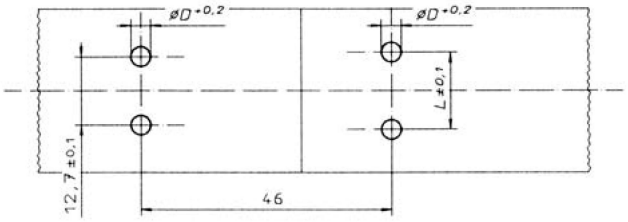

Select diameter D and distance L in accordance with the strike and tension latch.

TÜVRheinland ZERTIFIZIERT Management System ISO 9001:2015 ISO 14001:2015 www.tuv.com ID 9108624624

Further materials and surface finishes on demand. We will be pleased to give you advice.
Phone: +49 (0) 231 / 725 790 -0 eMail: info@hokon-verschlusstechnik.de
Fax: +49 (0) 231 / 725 790 -10 Homepage: www.hokon-verschlusstechnik.de

Suitable strike of Series V951L



	Zinc plated	Stainless steel
Tensile load max..	2300 N	1500 N
Operating load	1550 N	1000 N

Article no.			Dimensions in mm
Series	Material		D
	Zinc plated Steel	Raw Stainless steel	
V951L52-	1AGV	1BP	4,2

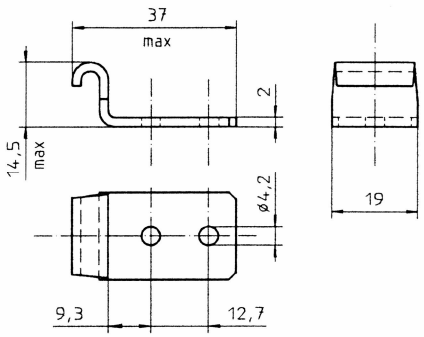

Open-base tension latch/ corner- mounting strike

V951L02-
V951L04-
V951L01-

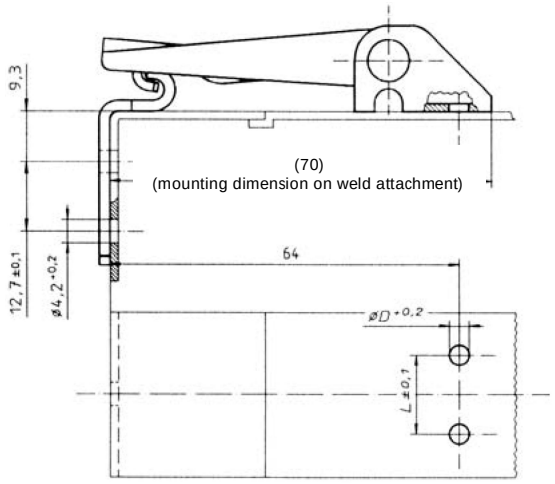

V951L52-

Concealed-base tension latch/ corner- mounting strike

V951L03-

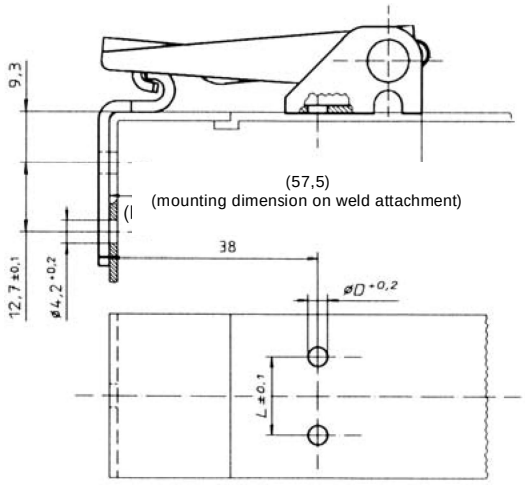

V951L52-

Select diameter D and distance L in accordance with the strike and tension latch.

Adjustable latches

Art.no. V917L01 (drilled)

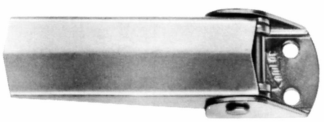

Tensile load max.. 3600 N
Operating load up to 2700 N

Open base

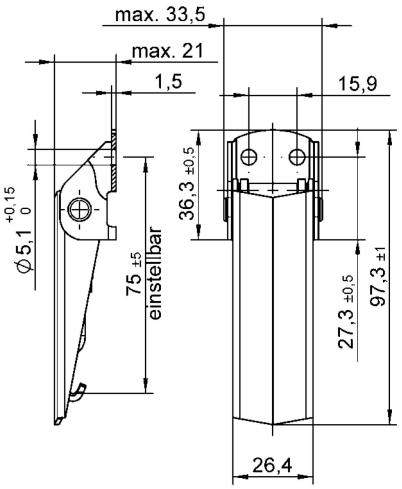

Article no.		
Series	Material	
	Zinc plated	Raw
	Steel	Stainless steel
V917L01-1-	1AG	1BP

Art.no. V17L12 (drilled)

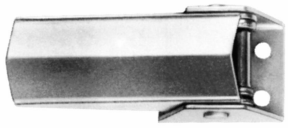

Tensile load max.. 3200 N
Operating load up to 2200 N

High base

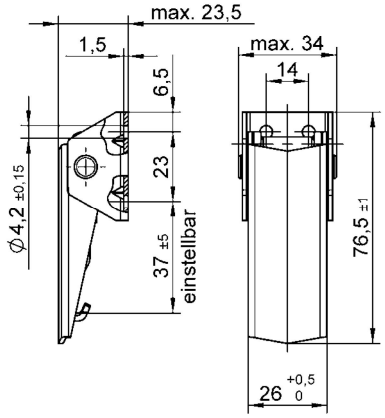

Article no.	
Series	Material
	Zinc plated
	Steel
V17L12-1-	1AA

Art.no. V917L01 (drilled)
with protection

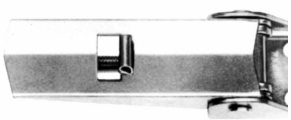

Tensile load max.. 3600 N
Operating load up to 2700 N

and open base

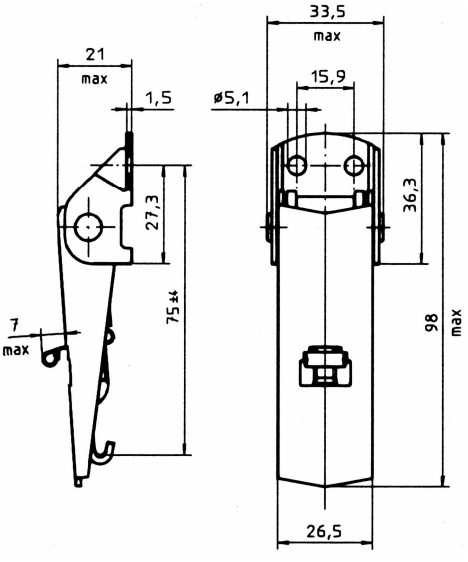

Article no.				Dimensions in mm
Series	Material			D
	Zinc plated	Raw	V4A	
	Steel	Stainless steel	Stainless steel	
V917L01-1X	1AG	1BP	1CP	5,1
V917L01-1X	-	2BP	2CP	without bore

TÜVRheinland ZERTIFIZIERT Management System ISO 9001:2015 ISO 14001:2015 www.tuv.com ID 9108624624

Further materials and surface finishes on demand. We will be pleased to give you advice.
Phone: +49 (0) 231 / 725 790 -0 eMail: info@hokon-verschlusstechnik.de
Fax: +49 (0) 231 / 725 790 -10 Homepage: www.hokon-verschlusstechnik.de

Adjustable latches

Art.no. V17L12 (drilled)
with protection

Tensile load max.. 3200 N
Operating load up to 2200 N

High base

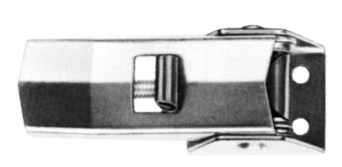

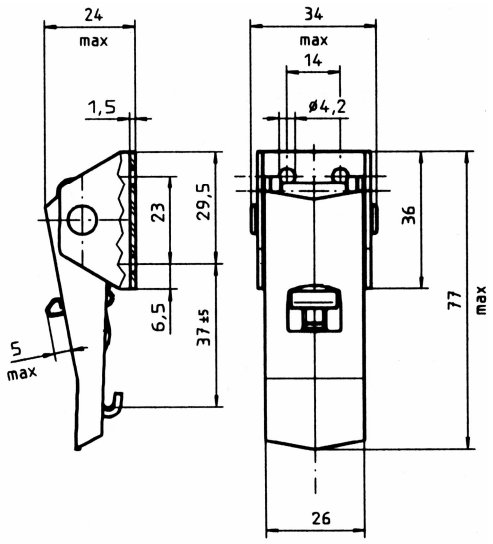

Article no.	
Series	Material
	Zinc plated
	Stainless steel
V17L12-2X	1AA

Art.no. V1449L02 (drilled)
with protection

Tensile load max.. 3600 N
Operating load up to 2700 N

for curved surfaces (R min = 125 mm)

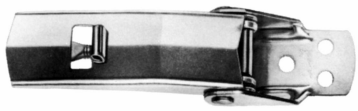

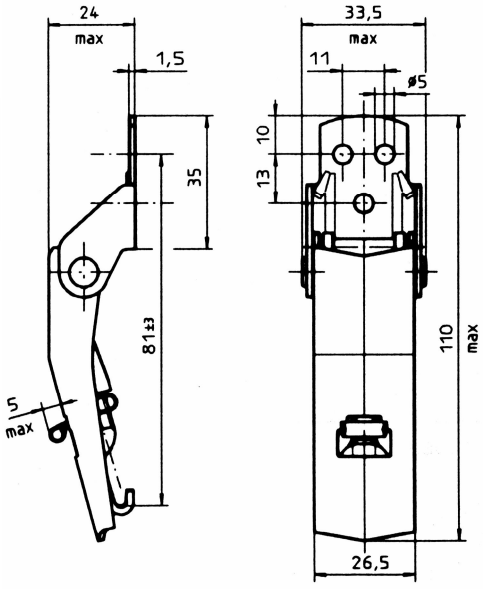

Article no.		
Series	Material	
	Zinc plated	Raw
	Steel	Stainless steel
V1449L02-1X	1AG	1BP

Art.no. V917L01 (drilled)
with hasp

Tensile load max.. 3200 N
Operating load up to 2200 N

Open base

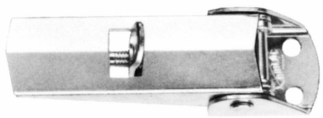

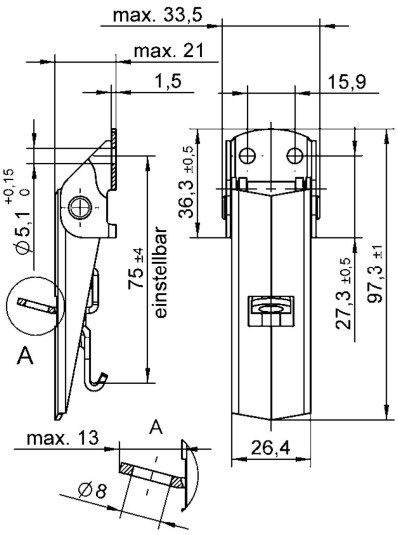

Article no.	
Series	Material
	Zinc plated
	Steel
V917L01-1Y	1AG

Further material and surface finishes on demand. We will be pleased to give you advice.
Phone: +49 (0) 231 / 725 790 -0 eMail: info@hokon-verschlusstechnik.de
Fax: +49 (0) 231 / 725 790 -10 Homepage: www.hokon-verschlusstechnik.de

Adjustable latches

Suitable strike of Series V917L01 V17L12

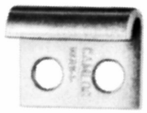

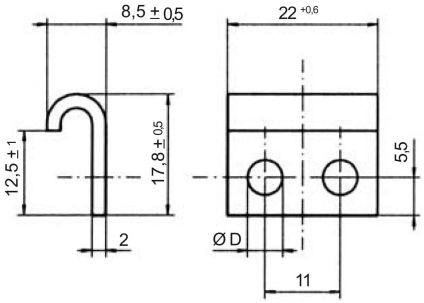

Article no.			Dimensions in mm
Series	Material		D
	Zinc plated	Raw	
	Steel	Stainless steel	
V917L11-1-	3AG	-	4,2
V917L11-1-	1AG	1BP	5,1

Open-base tension latch/ open strike

V917L01-

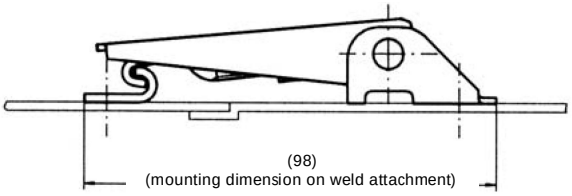

V917L11-

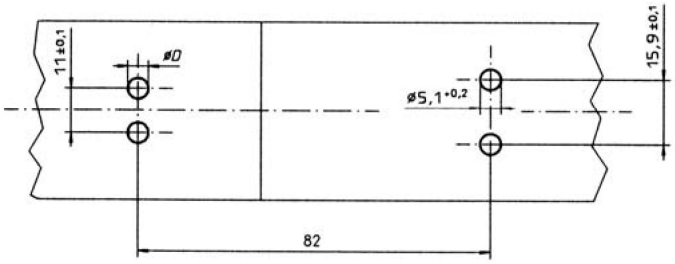

High-base tension latch/ open strike

V17L12-

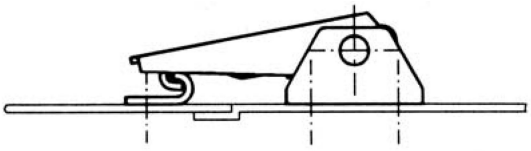

V917L11-

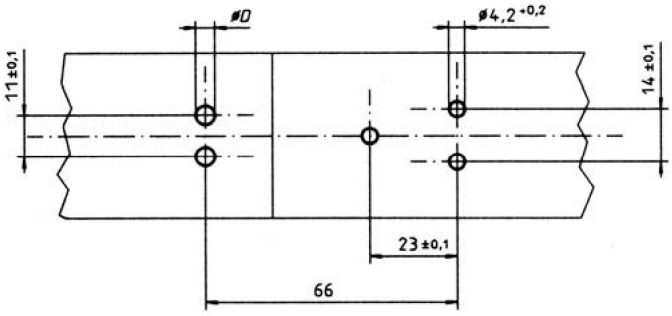

Select diameter D and distance L in accordance with the strike and tension latch.

TÜVRheinland ZERTIFIZIERT Management System ISO 9001:2015 ISO 14001:2015 www.tuv.com ID 9108624624

Further materials and surface finishes on demand. We will be pleased to give you advice.
Phone: +49 (0) 231 / 725 790 -0 eMail: info@hokon-verschlusstechnik.de
Fax: +49 (0) 231 / 725 790 -10 Homepage: www.hokon-verschlusstechnik.de

Adjustable latches

Suitable strike of series V917L01
1449L02



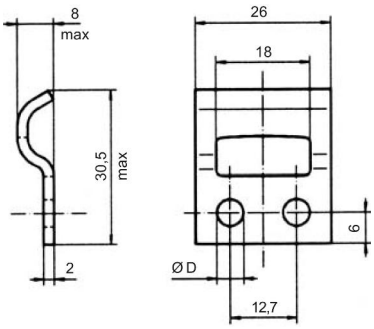

Article no.			Dimensions in mm
Series	Material		D
	Zinc plated	Raw	
	Steel	Stainless steel	
V951L50-	1AGV	1BP	4,2
V951L50-	5AGV	-	5,1
V951L50-	-	3BP	without bore

Open-base tension latch/ closed strike

V917L01-

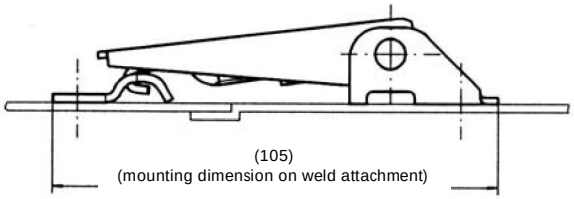

V951L50-

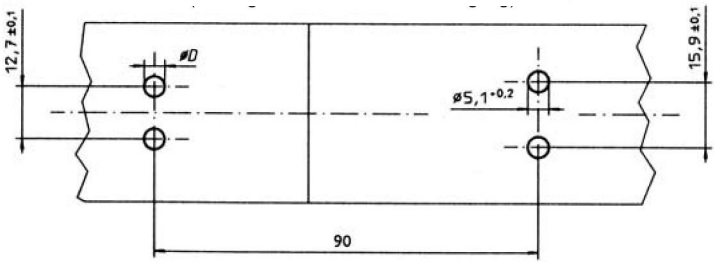

High-base tension latch/ closed strike

1449L02-

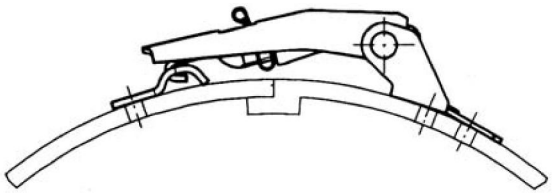

V951L50-

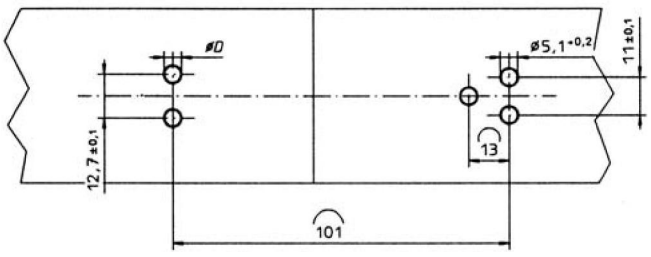

Select diameter D and distance L in accordance with the strike and tension latch.

Adjustable latches

Art.no. V18L01 (drilled)

Tensile load max. 6000 N
Operating load up to 4200 N

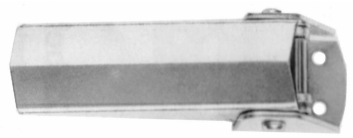

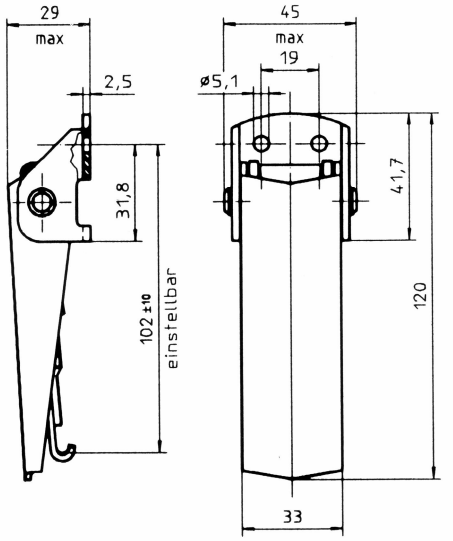

Article no.			Dimensions in mm
Series	Material		D
	Zinc plated	Raw	
	Steel	Stainless steel	
V18L01-1-	1AA	1BF	5,1
V18L01-1-	-	2BF	without bore

Art.no. V18L01 (drilled)
with secondary lock

Tensile load max.. 6000 N
Operating load up to 4200 N

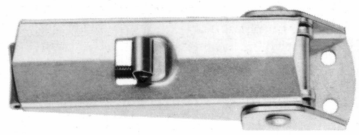

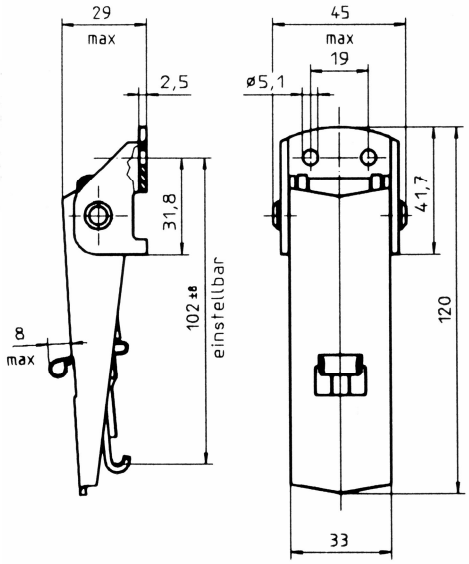

Article no.			Dimensions in mm
Series	Material		D
	Zinc plated	Raw	
	Steel	Stainless steel	
V18L01-1X	1AA	1BF	5,1
V18L01-1X	-	2BF	without bore

Art.no. V18L01 (drilled)
with hasp

Tensile load max.. 6000 N
Operating load up to 4200 N

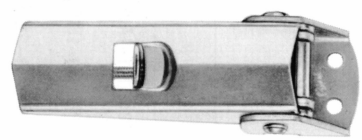

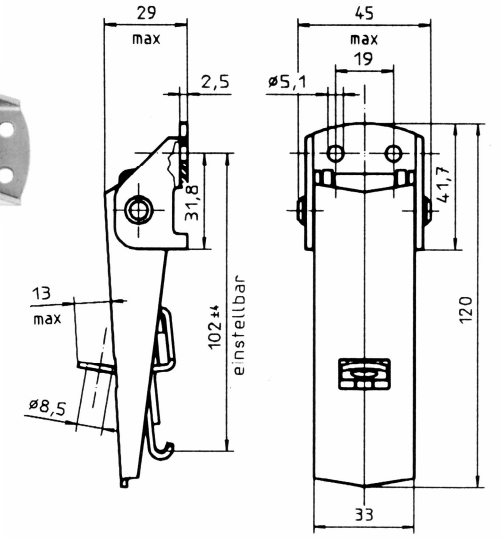

Article no.	
Series	Material
	Zinc plated
	Steel
V18L01-1Y	1AA

TÜVRheinland ZERTIFIZIERT Management System ISO 9001:2015 ISO 14001:2015 www.tuv.com ID 9108624624

Further materials and surface finishes on demand. We will be pleased to give you advice.
Phone: +49 (0) 231 / 725 790 -0 eMail: info@hokon-verschlusstechnik.de
Fax: +49 (0) 231 / 725 790 -10 Homepage: www.hokon-verschlusstechnik.de

Adjustable latches

Accessories

Art.no.V18L45

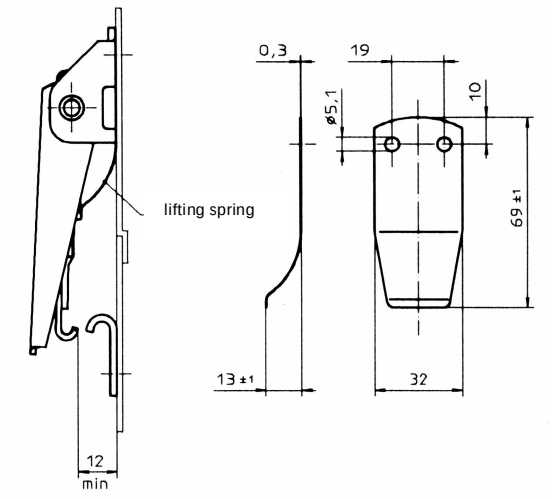

Article no.	
Series	Material
	Raw
	Stainless steel
V18L45-	1BP

Suitable strike of Series V18L01

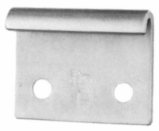

	Zinc plated	Stainless steel
Tensile load max.	6000 N	4600 N
Operating load	4200 N	3100 N

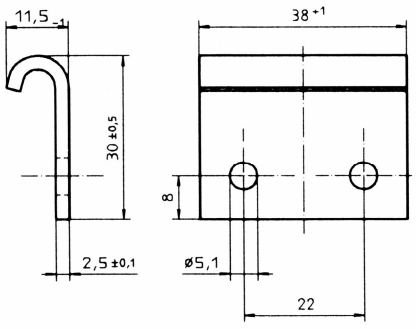

Article no.			Dimensions in mm
Series	Material		D
	Zinc plated	Raw	
	Steel	Stainless steel	
V18L13-1-	1AA	1BF	5,1
V18L13-1-	-	2BF	without bore

Tension latch/ open strike

V18L01-

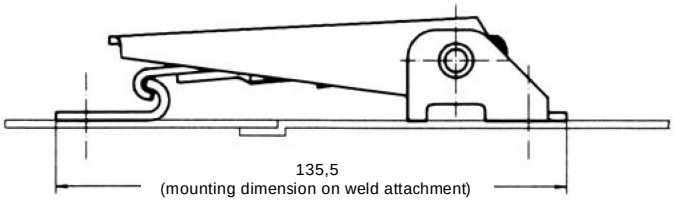

V18L13-

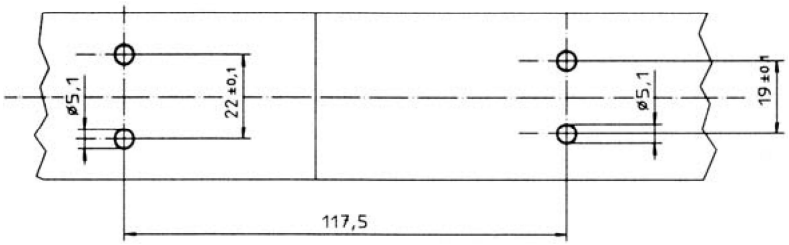

Adjustable latches

Suitable strike of Series V18L01

Tensile load max.. 4600 N
Operating load 3100 N

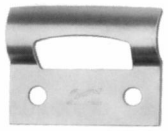

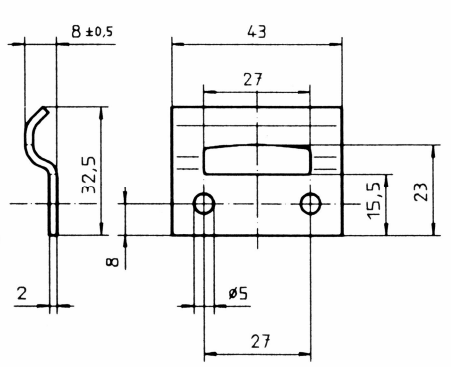

Article no.	
Series	Material
	Raw
	Stainless steel
1449L07-	1BP

Tension latch/ closed strike

V18L01-

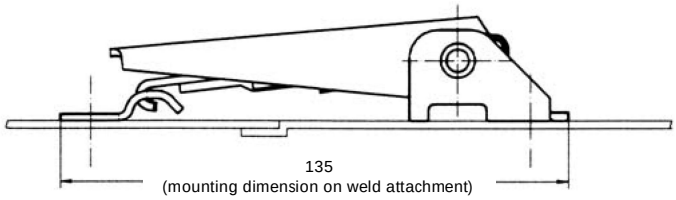

1449L07-

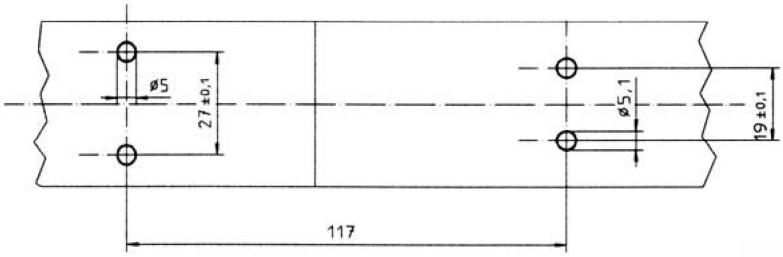

Art.no. V46L38 (drilled)

Tensile load max.. 4400 N
Operating load up to 3000 N

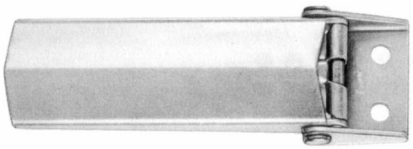

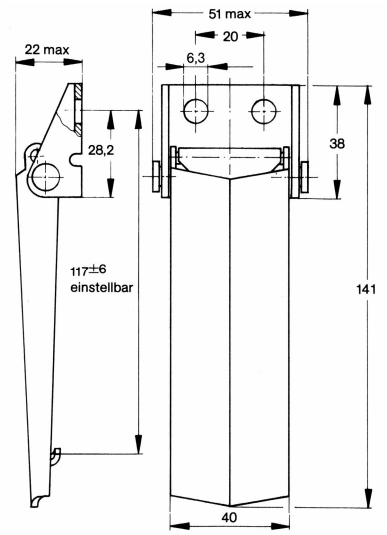

Article no.		Dimensions in mm
Series	Material	D
	Zinc plated yellow	
	Steel	
V46L38-1-	6AA	6,3
V46L38-1-	1AA	without bore

Suitable strike of Series V46L38

Article no.	
Series	Material
	Zinc plated yellow
	Steel
V18L13-1-	1AC

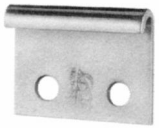

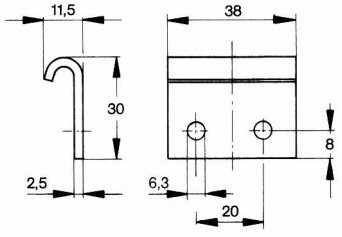

TÜVRheinland ZERTIFIZIERT Management System ISO 9001:2015 ISO 14001:2015 www.tuv.com ID 9108624624

Further materials and surface finishes on demand. We will be pleased to give you advice.
Phone: +49 (0) 231 / 725 790 -0 eMail: info@hokon-verschlusstechnik.de
Fax: +49 (0) 231 / 725 790 -10 Homepage: www.hokon-verschlusstechnik.de

Latches with sheet metal bracket



Art.: 1020



Art.: 1026



Art.: 2005



Art.: 2006



Art.: 2030



Art.: 2031



Art.:6606



Art.: 1036



Art.: 6208



Art.: 6236

Latches
with sheet metal bracket

Art. no.: 1020 (drilled)

Permitted tractive force: 500N
Breaking strength: 900N

Suitable clamps: see chapter „B“

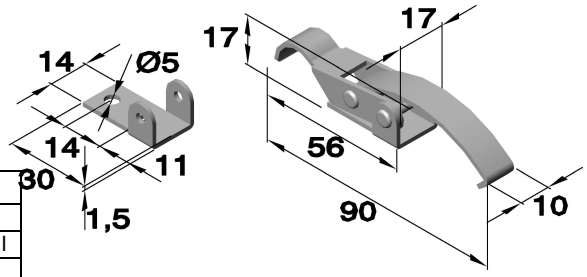

Article no.				
Series	Material			
	Steel	Nickel plated	Zinc plated	Stainless steel
	Steel	Steel	Steel	1.4301
1020	.00/6	.01/6	.04/6	.30/6

Art. no.: 1026 (drilled)

Permitted tractive force: 750 N
Breaking strength: 1500 N

Suitable clamps: see chapter „B“

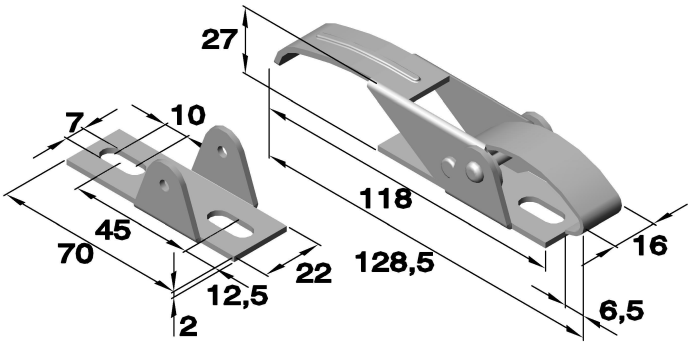

Article no.	
Series	Material
	Zinc plated
	Steel
1026	.04/6

Art. no.: 1036 (drilled, with spring)

Permitted tractive force: 150 N
Breaking strength: 300 N

Suitable clamps: see chapter „B“
Art. no.: 1036._ _/5

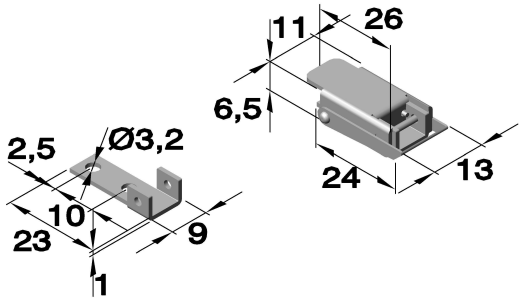

Article no.	
Series	Material
	Zinc plated
	Steel
1036	.04/6

Art. no.: 2005 (drilled)

Suitable clamps: see chapter „B“

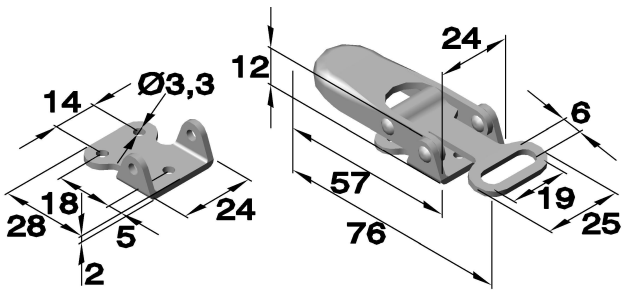

Article no.		
Series	Material	
	Raw	Zinc plated
	Steel	Steel
2005	.00	.04

TÜVRheinland ZERTIFIZIERT Management System ISO 9001:2015 ISO 14001:2015 www.tuv.com ID 9108624624

Further materials and surface finishes on demand. We will be pleased to give you advice.
Phone: +49 (0) 231 / 725 790 -0 eMail: info@hokon-verschlusstechnik.de
Fax: +49 (0) 231 / 725 790 -10 Homepage: www.hokon-verschlusstechnik.de

Latches
with sheet metal bracket

Art. no.: 2006 (drilled)

Suitable clamps: see chapter „B“

Article no.		
Series	Material	
	Raw	Zinc plated
	Steel	Steel
2006	.00	.04

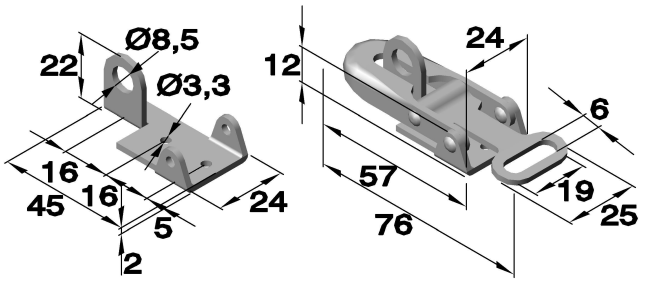

Art. no.: 2030 (drilled)

Suitable clamps: see chapter „B“

Article no.		
Series	Material	
	Zinc plated	Stainless steel
	Steel	1.4301
2030	.04	.30

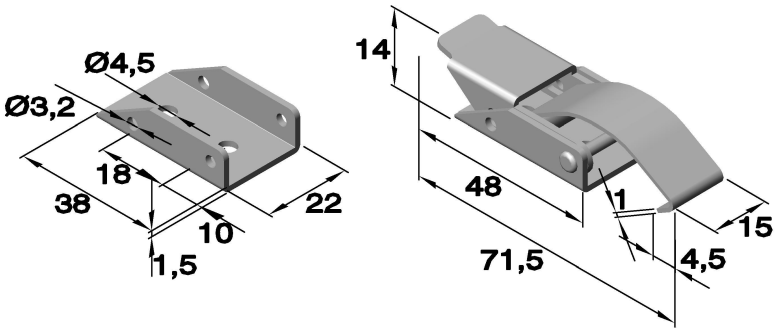

Art. no.: 2031 (drilled)

Suitable clamps: see chapter „B“

Article no.		
Series	Material	
	Zinc plated	Stainless steel
	Steel	1.4301
2031	.04	.30

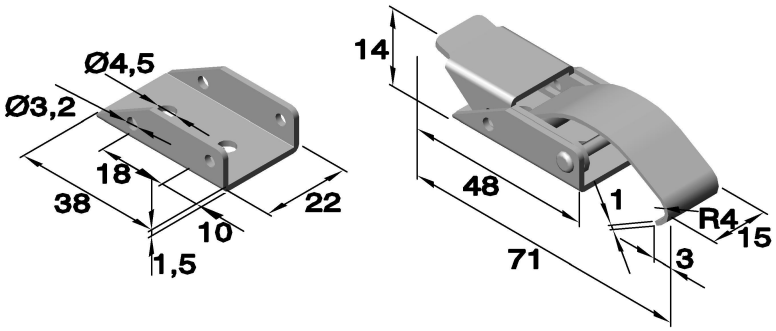

Art. no.: 2035/1 (drilled)
with safety spring

Suitable clamps: see chapter „B“

Article no.	
Series	Material
	Stainless steel
	1.4301
2035/1	.30

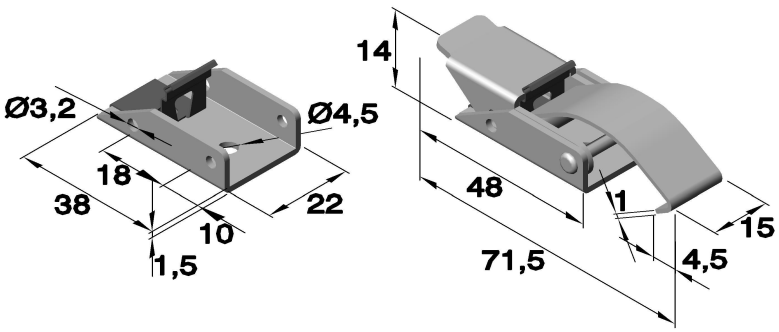

Latches
with sheet metal bracket

Art. no.: 6208.02 (drilled)
with spring clamp

Suitable clamps: see chapter „B“
Art. no.: 6379.01.30

Article no.	
Series	Material
	Stainless steel
	1.4301
6208	.02.30

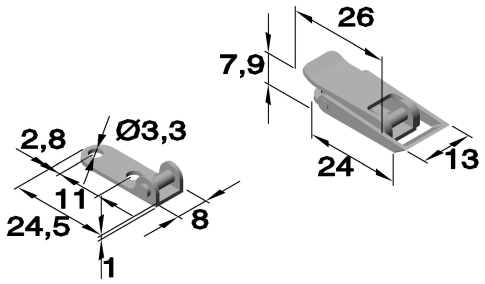

Art. no.: 6236 (drilled)

Suitable clamps: see chapter „B“

Article no.		
Series	Material	
	Zinc plated	Stainless steel
	Steel	1.4301
6236	.01.04	.02.30

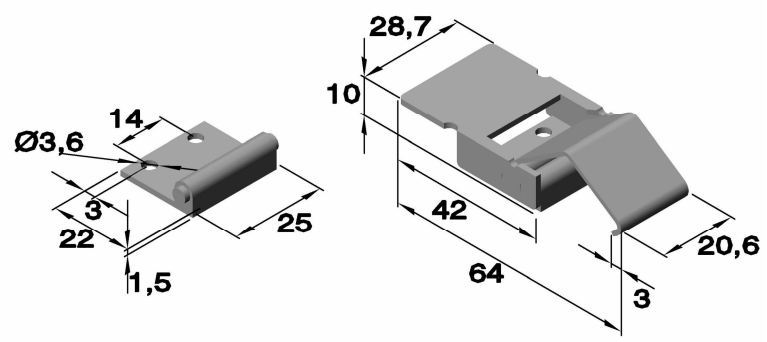

Art.no. 6606(drilled)

Suitable clamps: see chapter „B“

Article no.	
Series	Material
	Zinc plated
	Yellow chromated
6606	.08

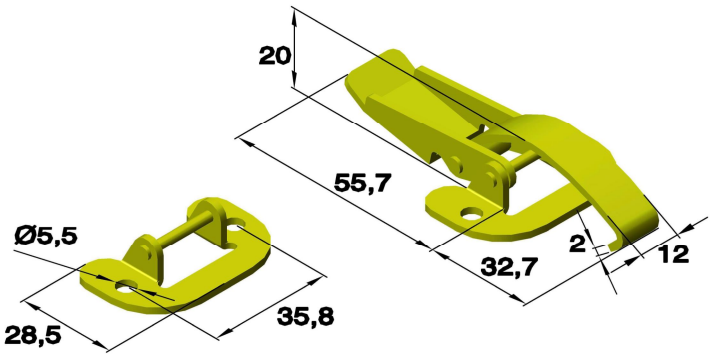

TÜVRheinland ZERTIFIZIERT Management System ISO 9001:2015 ISO 14001:2015 www.tuv.com ID 9108624624

Further materials and surface finishes on demand. We will be pleased to give you advice.
Phone: +49 (0) 231 / 725 790 -0 eMail: info@hokon-verschlusstechnik.de
Fax: +49 (0) 231 / 725 790 -10 Homepage: www.hokon-verschlusstechnik.de

Latches
with sheet metal bracket

Art.no. V934L (drilled)

Tensile load max. 550 N
Operating load 310 N

Article no.		
Series	Material	
	Raw	Zinc plated
	Stainless Steel	Steel
V934L01-1-1	BP	AGV

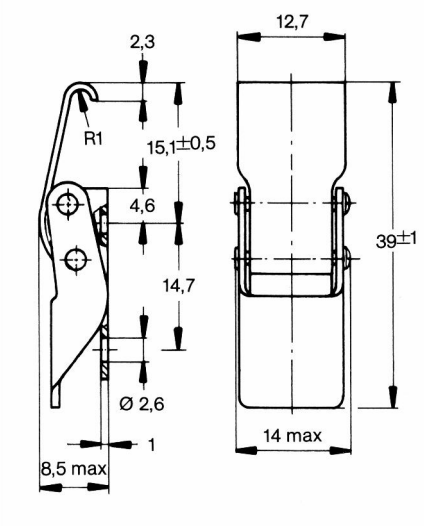



Art.no. V934L (drilled)

Tensile load max. 550 N
Operating load 310 N

Article no.		
Series	Material	
	Raw	Zinc plated
	Stainless Steel	Steel
V934L01-1X-1	BP	AGV

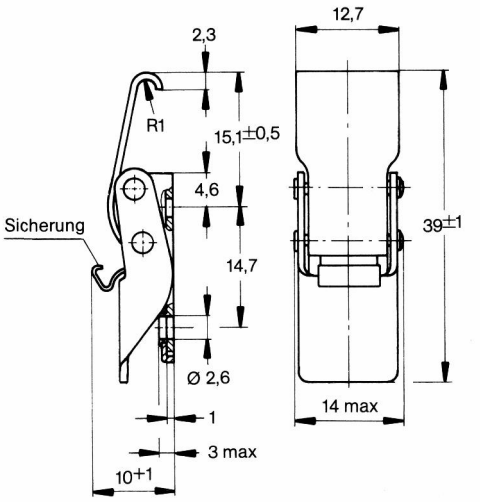



Suitable clamps

Article no.		
Series	Material	
	Raw	Zinc plated
	Stainless Steel	Steel
V934L02-1	BP	AGV

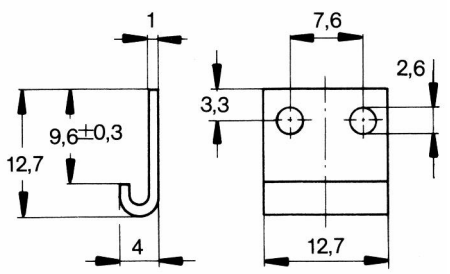



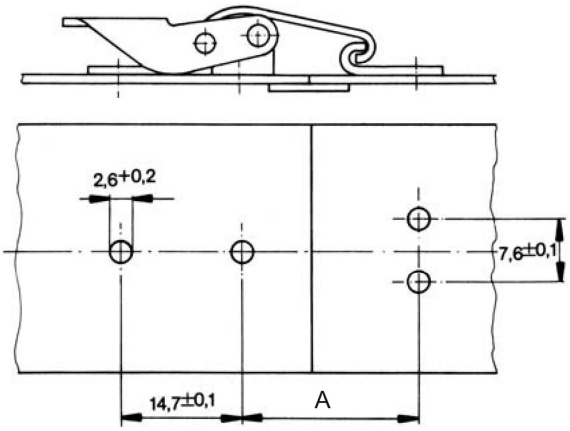

A = min. 23,7mm; Observed tolerance compensation/ preload when you install.

Latches
with sheet metal bracket

Art.no. 1429L (drilled)

Clamps	1AG	1BP
Tensile load max.	450 N	300 N
Operating load	330 N	210 N

Article no.		
Series	Material	
	Zinc plated	Raw
	Steel	Stainless Steel
1429L02-1-1	AG	BP

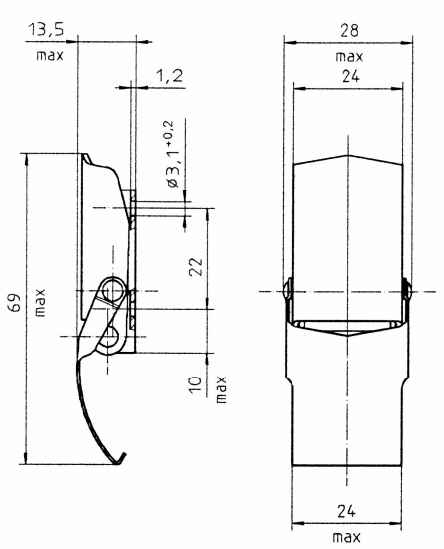



Art.Nr. 1429L (drilled)

Clamps	1AG	1BP
Tensile load max.	450 N	300 N
Operating load	330 N	210 N

Article no.		
Series	Material	
	Zinc plated	Raw
	Steel	Stainless Steel
1429L02-1X-1	AG	BP

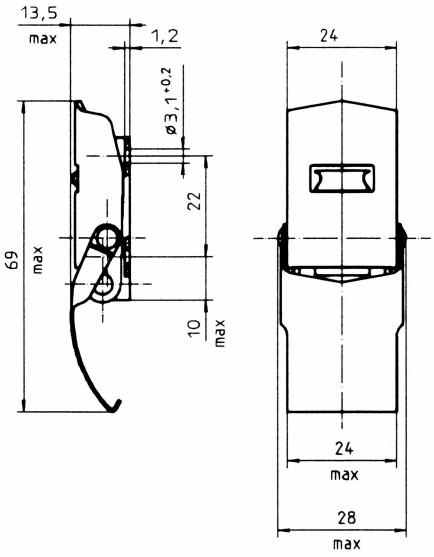



Suitable clamps

Article no.		
Series	Material	
	zinc plated	raw
	steel	stainless steel
1429L8-1	AG	BP

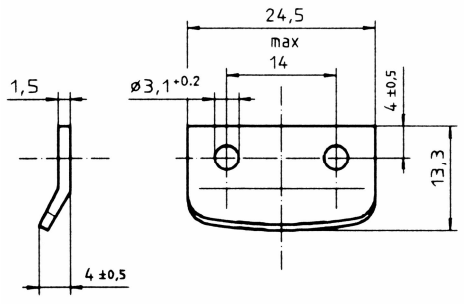



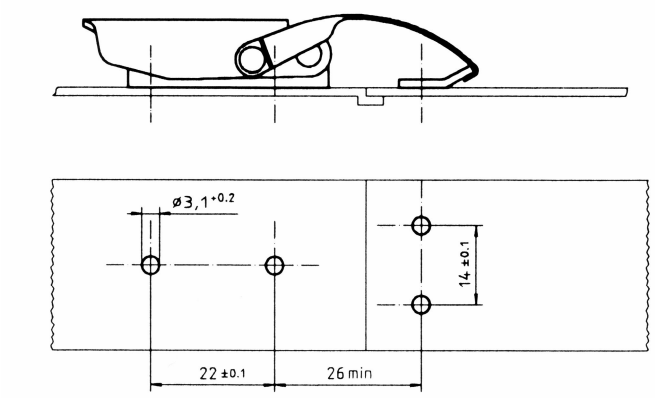

TÜVRheinland ZERTIFIZIERT Management System ISO 9001:2015 ISO 14001:2015 www.tuv.com ID 9108624624

Further materials and surface finishes on demand. We will be pleased to give you advice.
Phone: +49 (0) 231 / 725 790 -0 eMail: info@hokon-verschlusstechnik.de
Fax: +49 (0) 231 / 725 790 -10 Homepage: www.hokon-verschlusstechnik.de

Latches
with sheet metal bracket

Art.no.:6344

Strike plate included.

Article no.				Dimension in mm					
Series	Model	Material Black coated Zamak		A	B	C	E	F	G
6344	.01	.50	with lock	64,5	26,5	17,3	13	12	30
6344	.02	.50	without lock	64,5	26,5	17,3	13	12	30
6344	.03	.50	with lock	76	32	21	16,8	16	35,5
6344	.04	.50	without lock	76	32	21	16,8	16	35,5



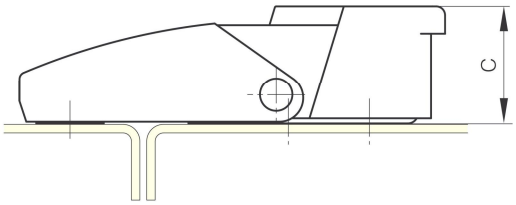

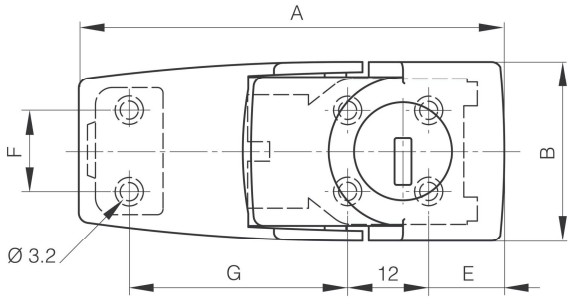



Art.no.:6332

Strike plate included.

Article no.		Dimension in mm					
Series	Material black coated Zamak	A	B	C	E	F	G
6332	.50	92	36	25	12	12	28-32



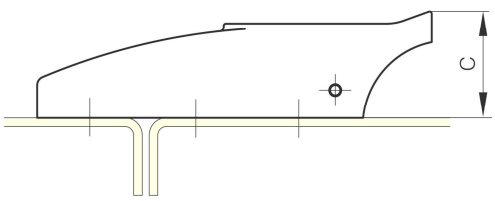

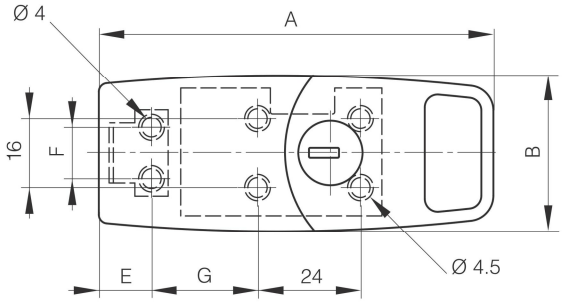

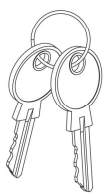

Latches
with sheet metal bracket

Art.no.:6345



Strike plate included.

Article no.			Dimension in mm		
Series	Type	Material Black Elastomer (gum)	A	B	C
6345	.01	.80	96,5	29	20

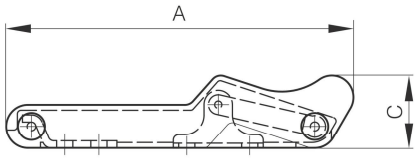

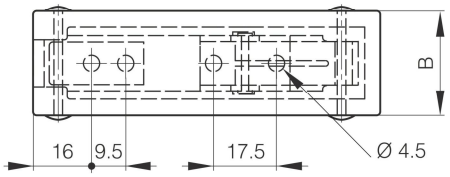

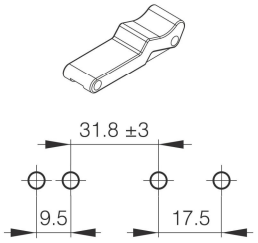

Art.no.:6345



Strike plate included.

Article no.			Dimension in mm		
Series	Type	Material Black Elastomer (gum)	A	B	C
6345	.02	.80	151	45,7	29,5

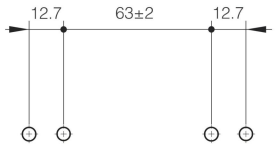

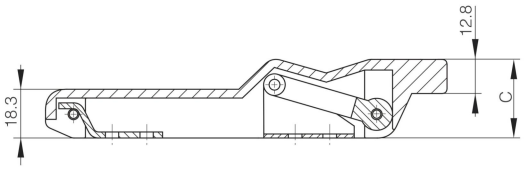

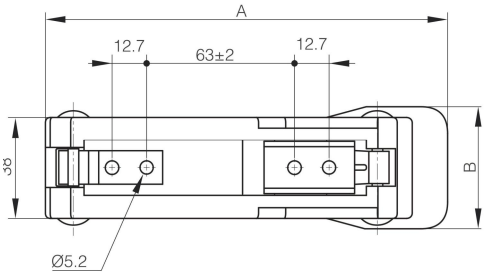

TÜVRheinland ZERTIFIZIERT
Management System
ISO 9001:2015
ISO 14001:2015
www.tuv.com ID 9108624624

Further materials and surface finishes on demand. We will be pleased to give you advice.
Phone: +49 (0) 231 / 725 790 -0 eMail: info@hokon-verschlusstechnik.de
Fax: +49 (0) 231 / 725 790 -10 Homepage: www.hokon-verschlusstechnik.de

Heavy latches



Art.:2001

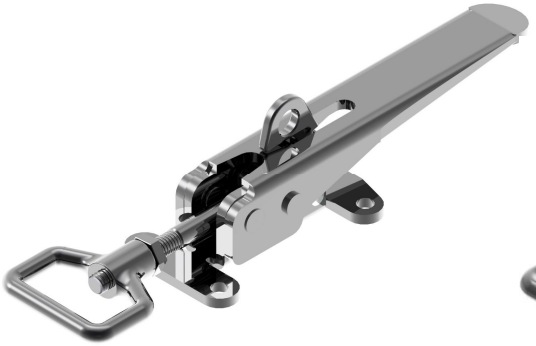

Art.:2003



Art.:2004



Art.:3125

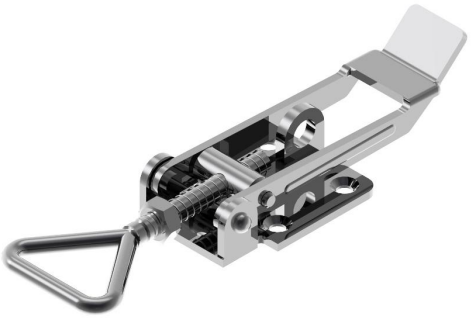

Art.:3320

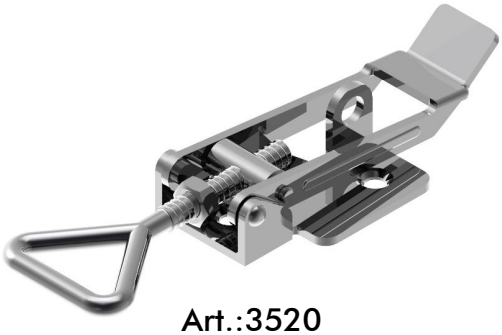

Art.:3520

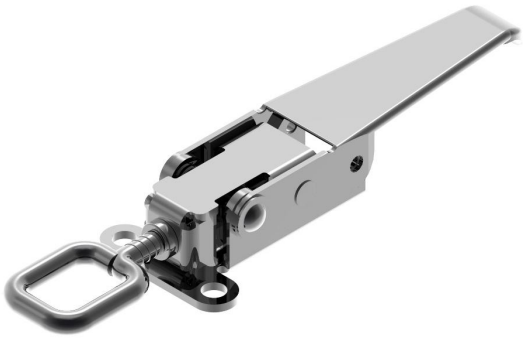

Art.:3157

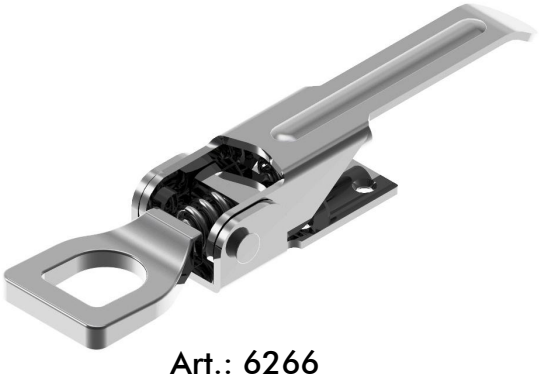

Art.: 6266

Heavy latches

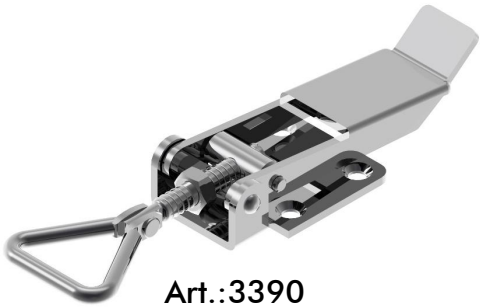

Art.:3390

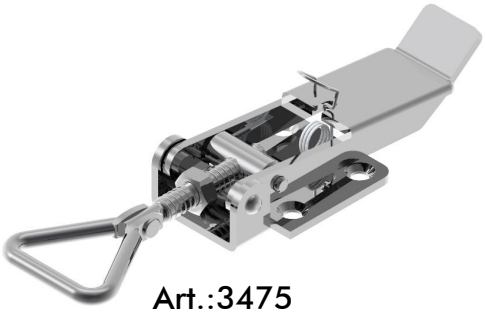

Art.:3475

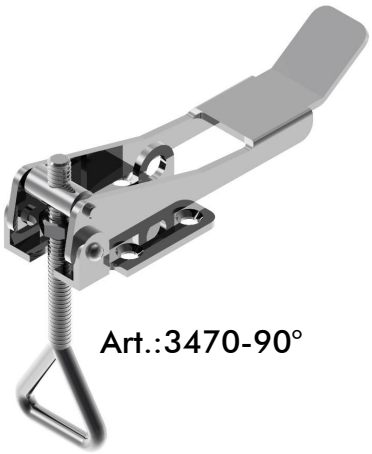

Art.:3470-90°



Art.:3471-90°



Art.:3472-90°



Art.:3480-90°



Art.:99.V18L01-Z-1BP

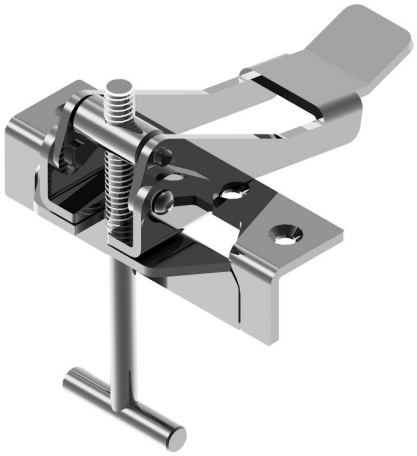

Art.:99.3475.30-V2

TÜVRheinland ZERTIFIZIERT
Management System
ISO 9001:2015
ISO 14001:2015
www.tuv.com ID 9108624624

Further materials and surfaces finishes on demand. We will be pleased to give you advice.
Phone: +49 (0) 231 / 725 790 -0
Fax: +49 (0) 231 / 725 790 -10
eMail: info@hokon-verschlusstechnik.de
Homepage: www.hokon-verschlusstechnik.de

Heavy latches

Art. no.: 2001 (perforated)
with secondary loop lock
adjustable

Article no.	
Series	Material
	Zinc plated
	Steel
2001	.04

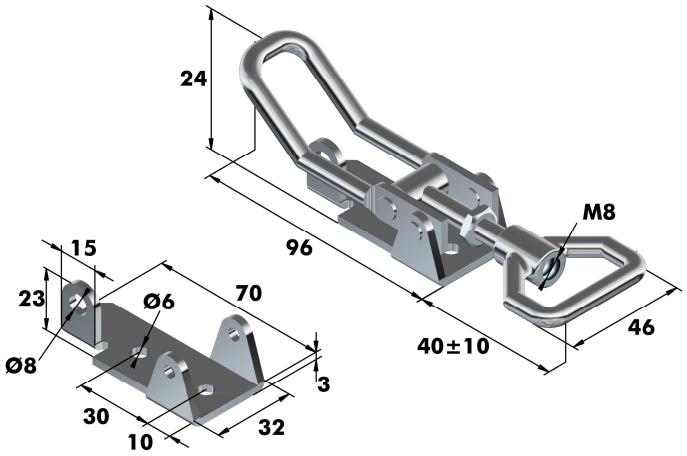

Art. no.: 2003 (perforated)
with spring protection
adjustable

Article no.	
Series	Material
	Zinc plated
	Steel
2003	.04

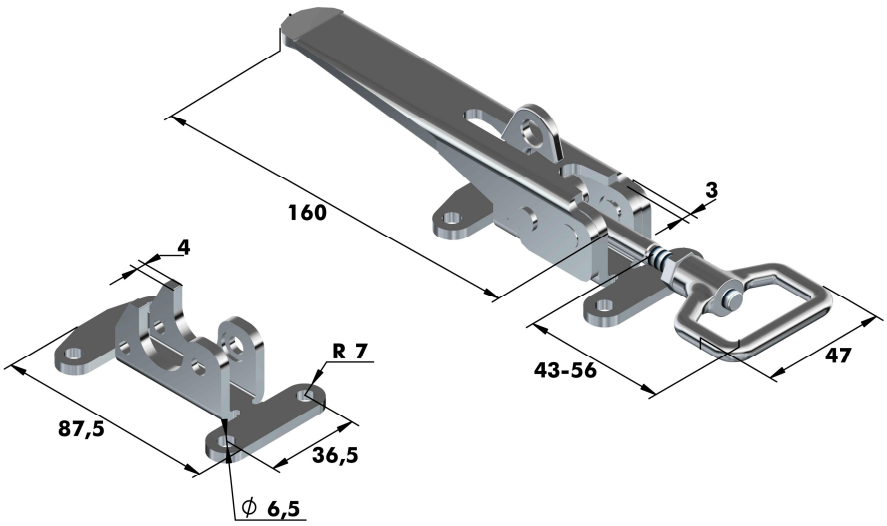

Art.Nr. 2004 (perforated)
adjustable

Article no.	
Series	Material
	Zinc plated
	Steel
2004	.04

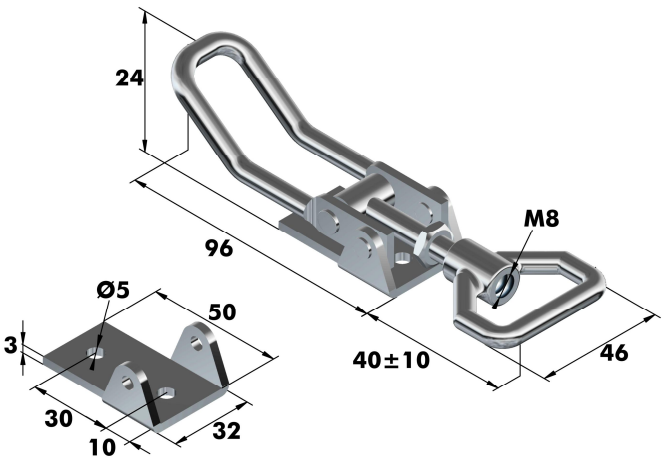

Heavy latches

Art. no.: 3125 (perforated and countersunk)
with secondary loop lock
adjustable

Maximum load: ca. 5000 N

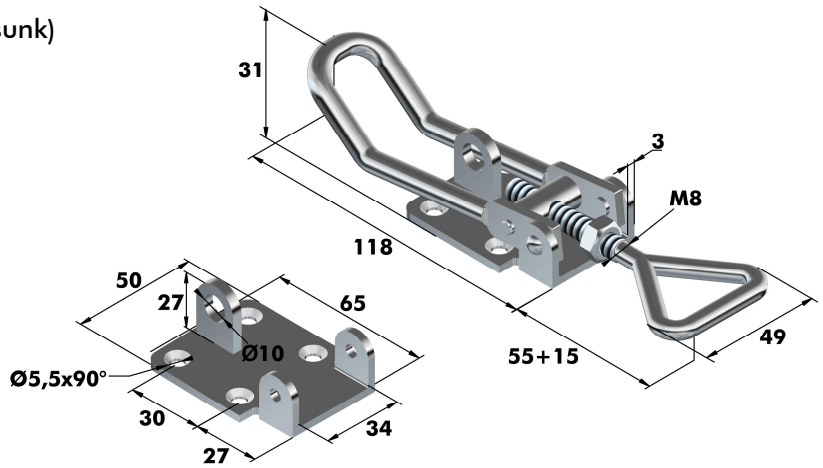

Article no.	
Series	Material
	Zinc plated
	Steel
3125	.04

Art. no.: 3320 (perforated and countersunk)
with secondary loop lock
adjustable

Maximum load: ca. 5000 N

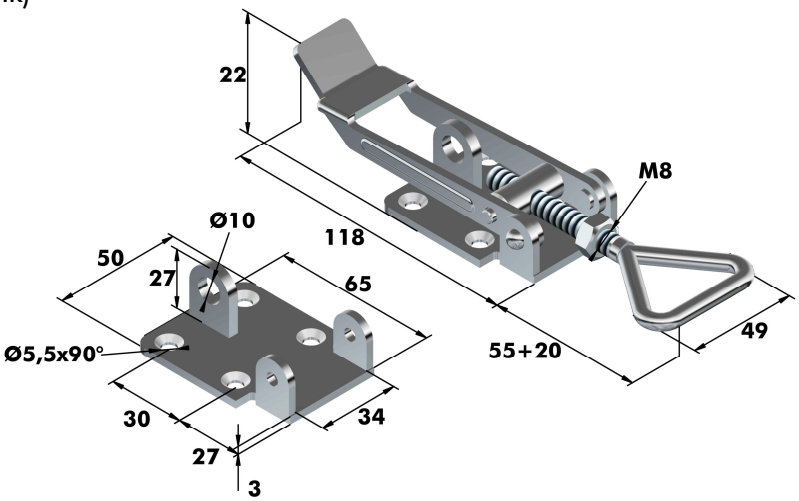

Article no.		
Series	Material	
	Zinc plated	Polished
	Steel	1.4301
3320	.04	.33

Art. no.: 3520 (perforated and countersunk)
with secondary loop lock
adjustabl
Maximum load: ca. 5000 N

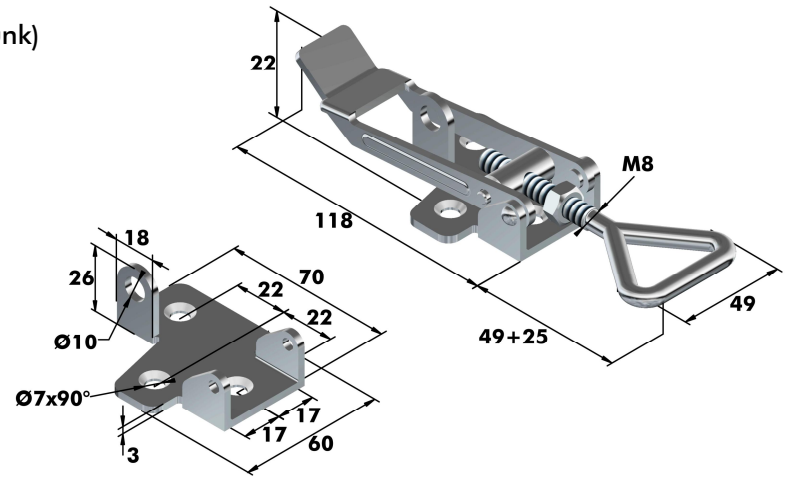

Article no.		
Series	Material	
	Zinc plated	Polished
	Steel	1.4301
3520	.04	.33

TÜVRheinland ZERTIFIZIERT
Management System
ISO 9001:2015
ISO 14001:2015
www.tuv.com ID 9108624624

Further materials and surfaces finishes on demand. We will be pleased to give you advice.
Phone: +49 (0) 231 / 725 790 -0 eMail: info@hokon-verschlusstechnik.de
Fax: +49 (0) 231 / 725 790 -10 Homepage: www.hokon-verschlusstechnik.de

Heavy latches

Art. no.: 3390 (perforated and countersunk)
adjustable

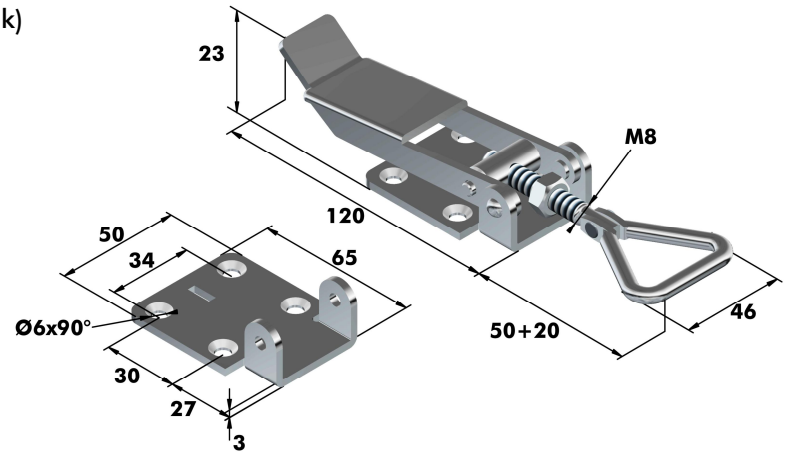

Article no.	
Series	Material
	Raw
	Stainless steel
3390	.30

Art. no.: 3475 (perforated and countersunk)
with spring protection
adjustable

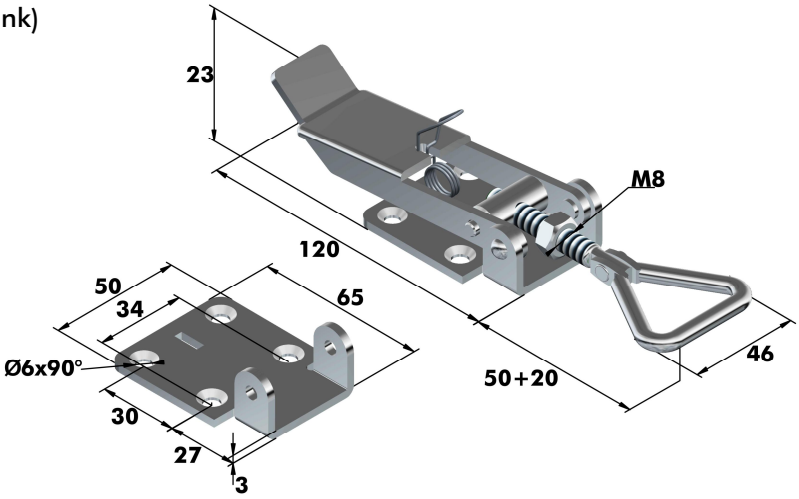

Article no.	
Series	Material
	Raw
	Stainless steel
3475	.30

Heavy latches

Art. no.: 3470-90° (perforated and countersunk)

with secondary loop lock
adjustable

Article no.		
Series	Material	
	Zinc plated	Raw
	Steel	Stainless steel
3470	.04	.30

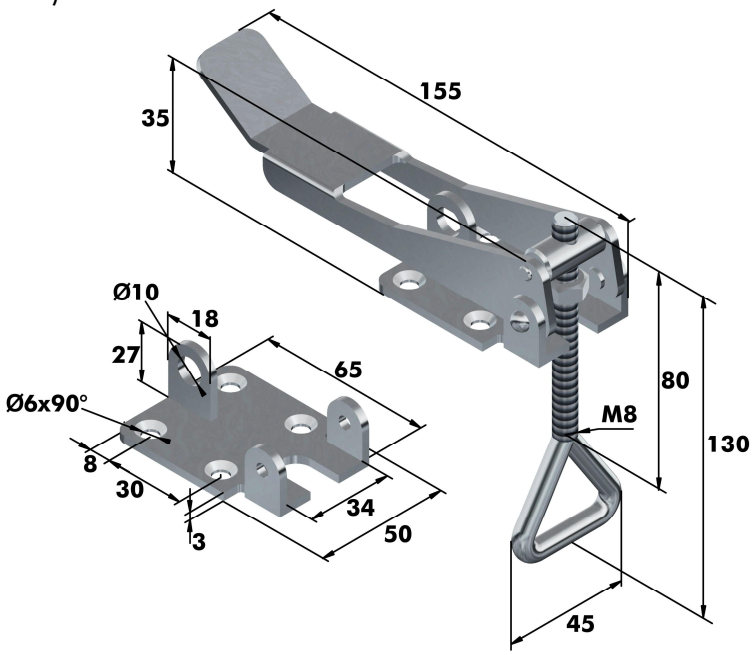

Art. no.: 3471-90° (perforated and countersunk)

adjustable

Article no.		
Series	Material	
	Zinc plated	Raw
	Steel	Stainless steel
3471	.04	.30

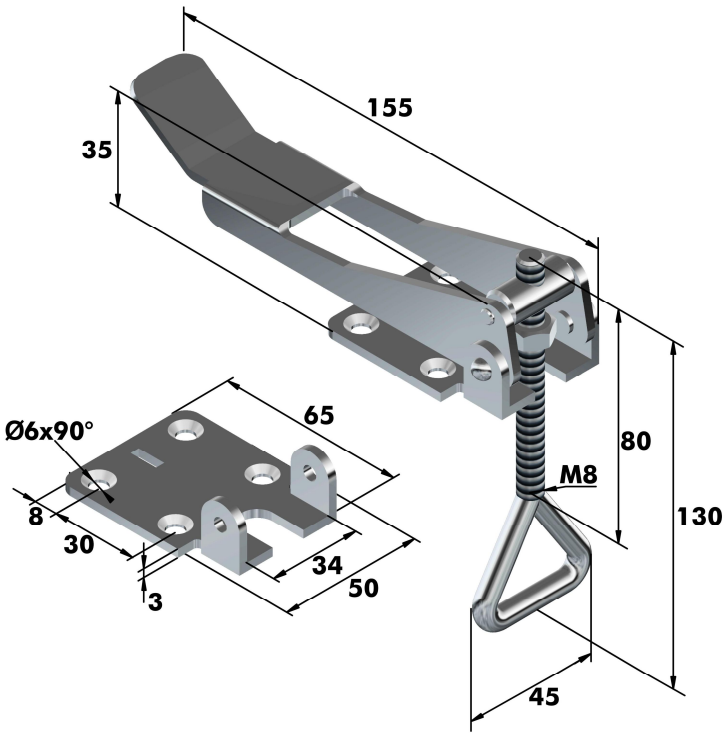

TÜVRheinland ZERTIFIZIERT
Management System ISO 9001:2015 ISO 14001:2015
www.tuv.com ID 9108624624

Further materials and surfaces finishes on demand. We will be pleased to give you advice.
Phone: +49 (0) 231 / 725 790 -0
Fax: +49 (0) 231 / 725 790 -10
eMail: info@hokon-verschlusstechnik.de
Homepage: www.hokon-verschlusstechnik.de

Heavy latches

Art. no.: 3472-90°
adjustable

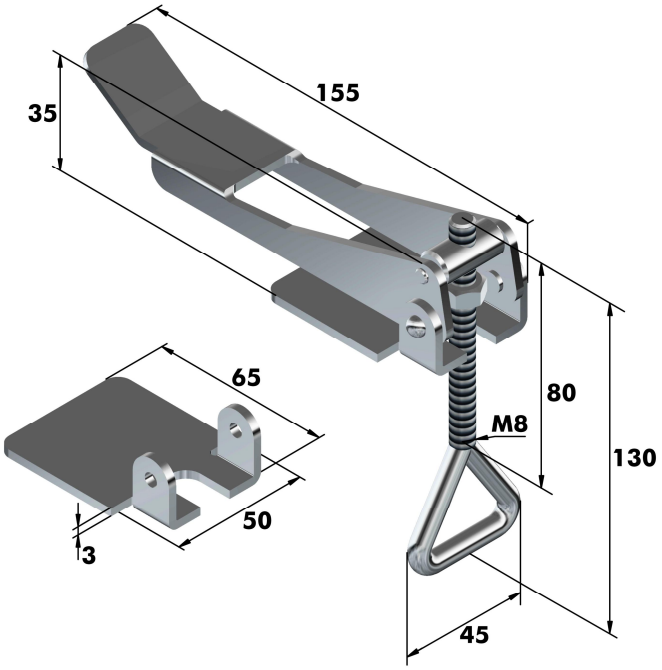

Article no.		
Series	Material	
	Zinc plated	Raw
	Steel	Stainless steel
3472	.04	.30

Art. no.: 3480-90° (perforated and countersunk)
with secondary loop lock
adjustable

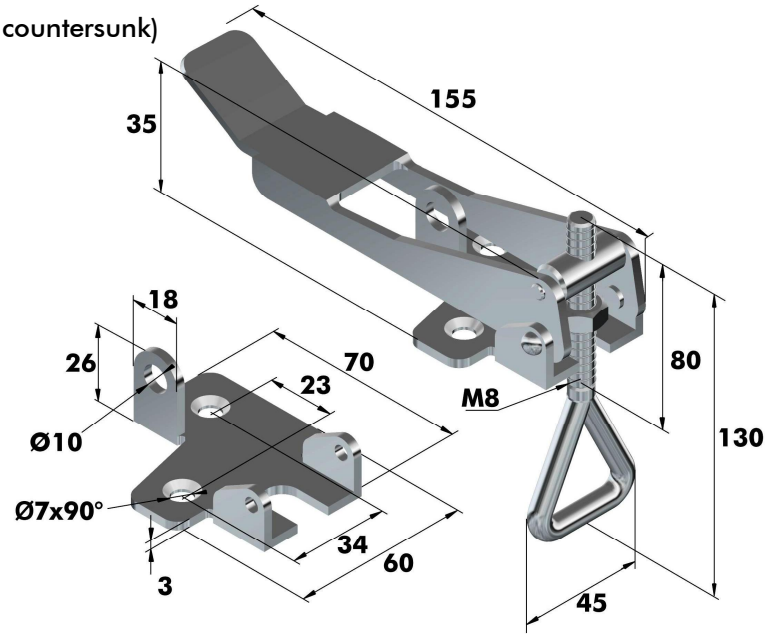

Article no.		
Series	Material	
	Zinc plated	Raw
	Steel	Stainless steel
3480	.04	.30

Heavy latches

Art.no. 99.V18L01-Z-1BP (perforated)

with adjustable hook
and adjustable spring force

Figure shows an example

Possible design on request.

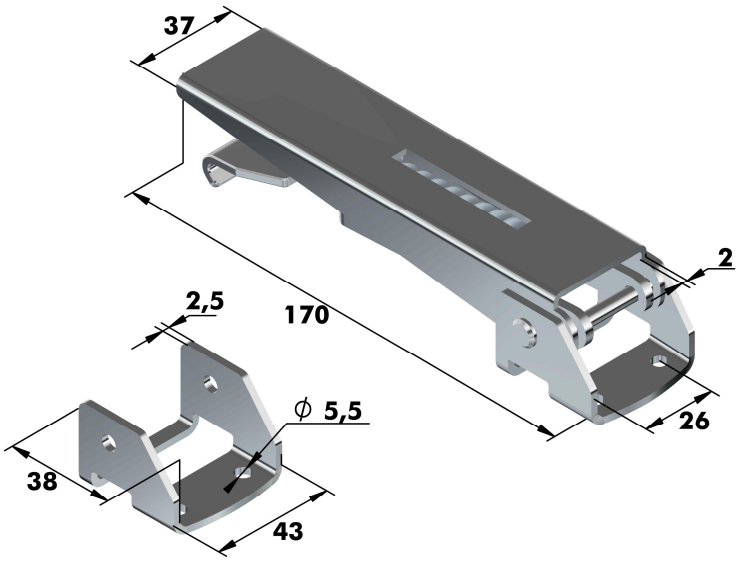

Article no.	
Series	Material
	Raw
	Stainless steel
99.V18L01-Z-1BP	.30

Art.no. 3157 (perforated)

adjustable

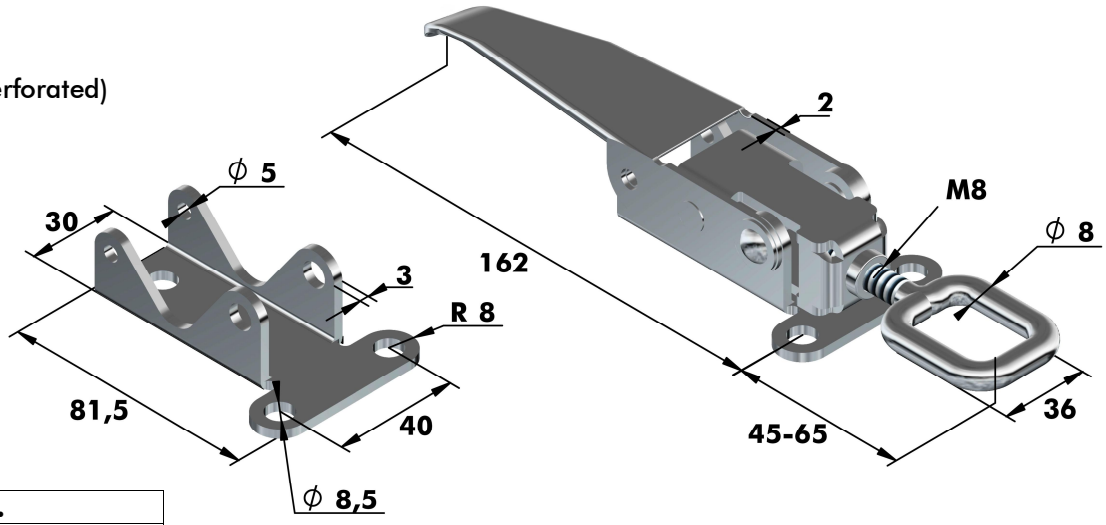

Article no.	
Series	Material
	Zinc plated
	Steel
3157	.04

TÜVRheinland ZERTIFIZIERT
Management System ISO 9001:2015 ISO 14001:2015
www.tuv.com ID 9108624624

Further materials and surfaces finishes on demand. We will be pleased to give you advice.
Phone: +49 (0) 231 / 725 790 -0
Fax: +49 (0) 231 / 725 790 -10
eMail: info@hokon-verschlusstechnik.de
Homepage: www.hokon-verschlusstechnik.de

Heavy latches

Art.no.6266 (perforated and countersunk)
adjustable
with spring

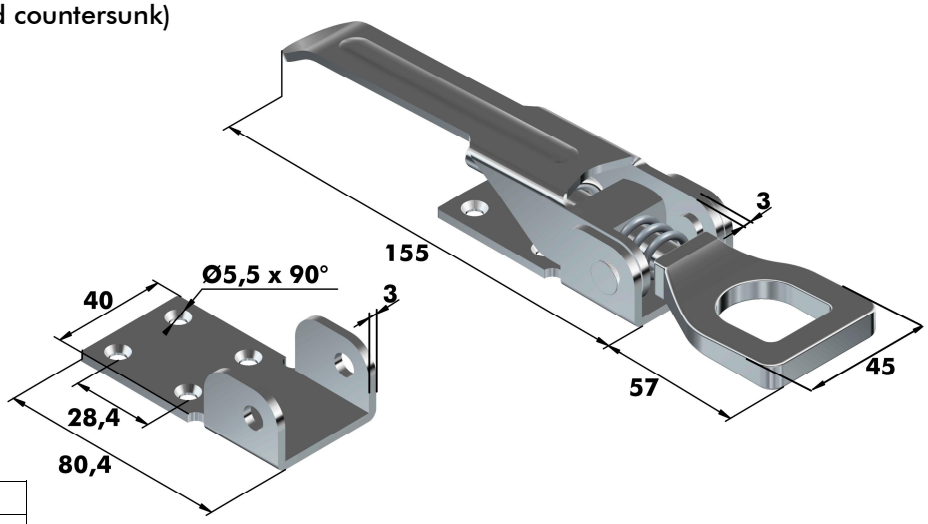

Article no.	
Series	Material
	Zinc plated
	Steel
6266	.04

Art.no. 99.3475-90°
(perforated, countersunk with welded reinforcement)
adjustable
with suitable strike

for heavy loads

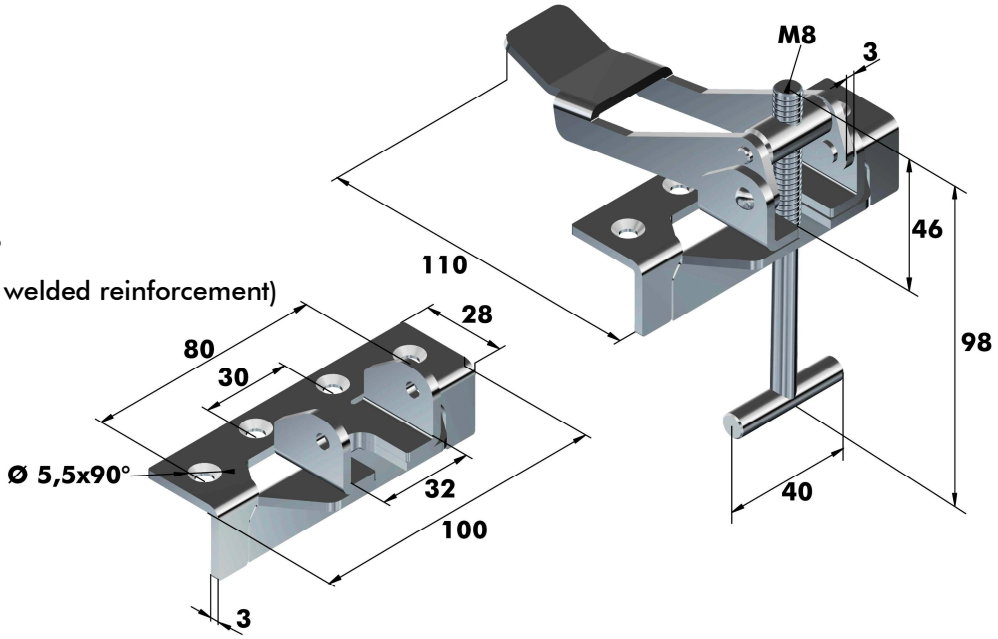

Article no.	
Series	Material
	Raw
	Stainless steel
99.3475	.30

Strike:

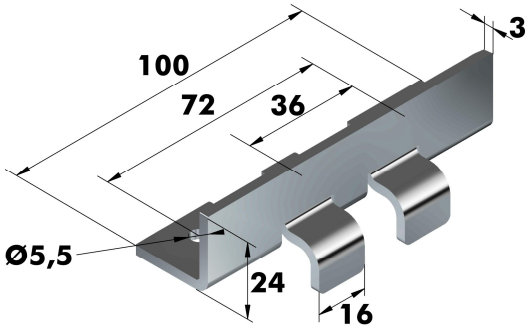

Heavy latches

Management System
ISO 9001:2015
ISO 14001:2015
TÜVRheinland ZERTIFIZIERT
www.tuv.com ID 9108624624

Further materials and surfaces finishes on demand. We will be pleased to give you advice.
Phone: +49 (0) 231 / 725 790 -0 eMail: info@hokon-verschlusstechnik.de
Fax: +49 (0) 231 / 725 790 -10 Homepage: www.hokon-verschlusstechnik.de

Spring latches

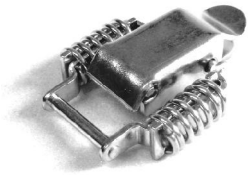

Art.: 1034



Art.: 6602



Art.: 6243



Art.: 1036



Art.: 6208



Art.: 3020



Art.: 6200



Art.: 6201



Art.: 6203



Art.:95L



Art.:V96L

Spring latches

Art. no.: 1034 (drilled)
with spring brackets

Permitted tractive force: 500 N
Breaking strength: 1500 N

Suitable Strikes: see chapter „B“
Art. no.: 1034._ _/5

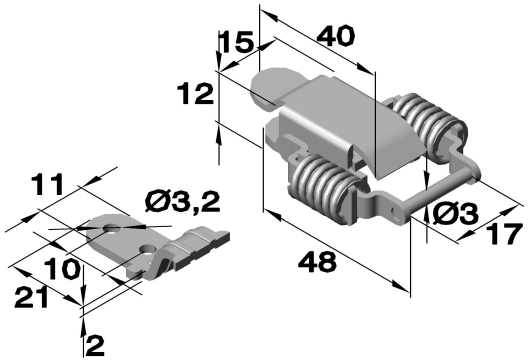

Article no.		
Series	Material	
	Zinc plated	Stainless steel
	Steel	1.4301
1034	.04/6	.30/6

Art. no.: 6255 (drilled)
with spring brackets and secondary loop lock

Suitable Strikes: see chapter „B“
Art. no.: 6605.__

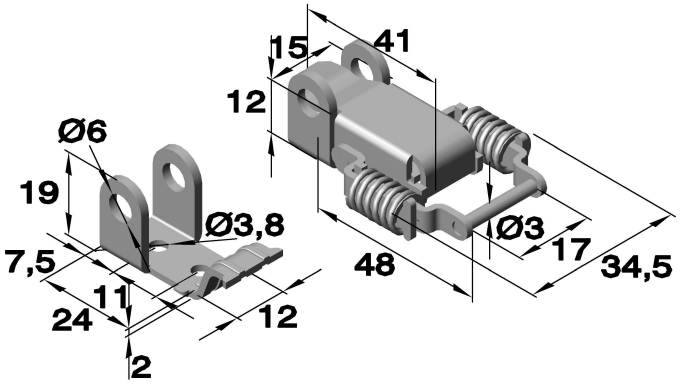

Article no.		
Series	Material	
	Zinc plated	Stainless steel
	Steel	1.4301
6255	.03.04/6	.04.30/6

Art. no.: 6602 (drilled)
with spring brackets

Suitable Strikes: see chapter „B“
Art. no.: 6603.__

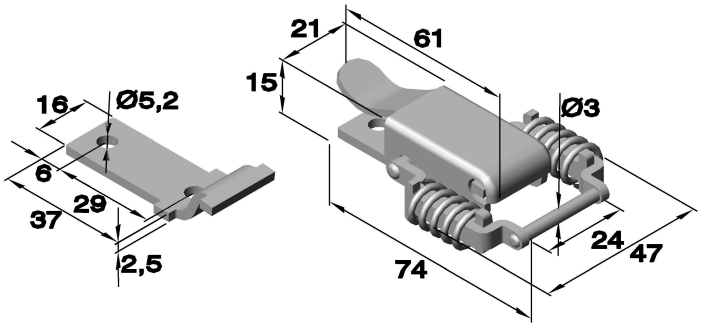

Article no.		
Series	Material	
	Zinc plated	Stainless steel
	Steel	1.4301
6602	.05.04	.06.30

TÜVRheinland ZERTIFIZIERT Management System ISO 9001:2015 ISO 14001:2015 www.tuv.com ID 9108624624

Further materials and surfaces finishes on demand. We will be pleased to give you advice.
Phone: +49 (0) 231 / 725 790 -0 eMail: info@hokon-verschlusstechnik.de
Fax: +49 (0) 231 / 725 790 -10 Homepage: www.hokon-verschlusstechnik.de

Spring latches

Art.no. 6610 (drilled)
with spring brackets

Suitable strikes: see chapter „B“
Art.no. 6603.__

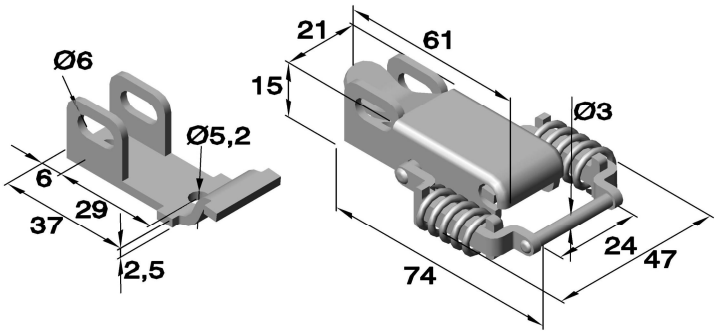

Article no.		
Series	Material	
	Zinc plated	Stainless steel
	Steel	1.4301
6610.05	.04	.30

Art. no.: 1036 (drilled)
with spring brackets

Permitted tractive force: 150 N
Breaking strength: 300 N

Suitable strikes: see chapter „B“
Art. no.: 1036._ _/5

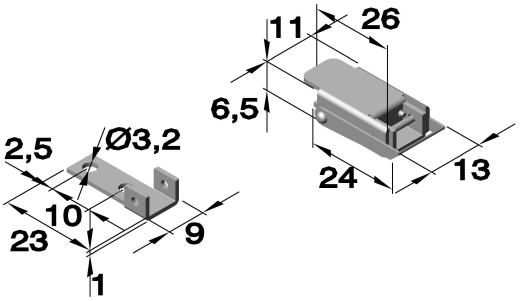

Article no.	
Series	Material
	Zinc plated
	Steel
1036	.04/6

Art.no. 6208.02(drilled)
with spring brackets

Suitable strikes: see chapter „B“
Art.no.6379.01.30

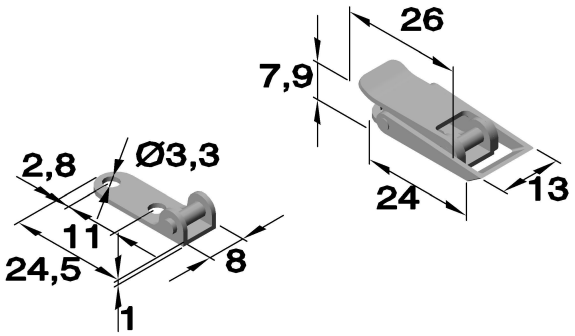

Article no.	
Series	Material
	Stainless steel
	1.4301
6208	.02.30

Art. no.: 6200.01 (drilled)
with spring brackets and secondary loop lock

Suitable Strikes: see chapter „B“
Art. no.: 6200.30

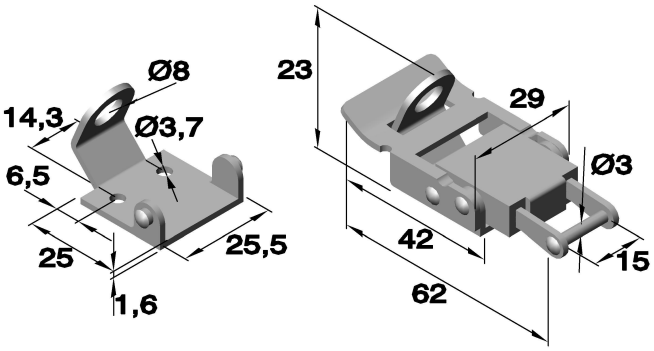

Article no.			
Series	Execution	Material	
		Zinc plated	Stainless steel
		Steel	1.4301
6200	.01	.04	.30

Spring latches

Art. no.: 6201.01 (drilled)
with spring brackets and safety spring

Suitable Strikes: see chapter „B“
Art. no.: 6200.30

Article no.		
Series	Execution	Material
		Stainless steel
		1.4301
6201	.01	.30

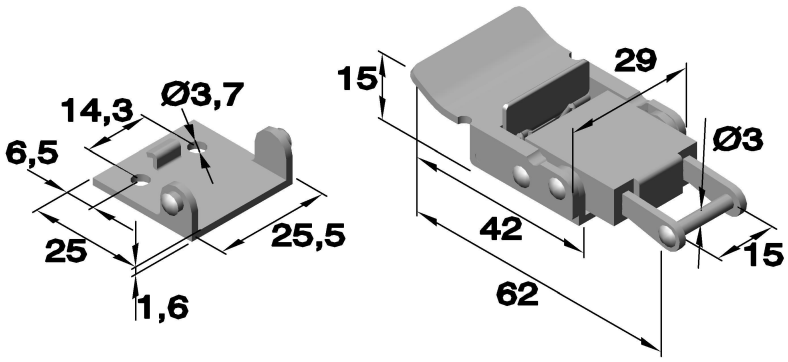

Art. no.: 6203.01 (drilled)
with spring brackets

Suitable Strikes: see chapter „B“
Art. no.: 6200.30

Article no.		
Series	Execution	Material
		Stainless steel
		1.4301
6203	.01	.30

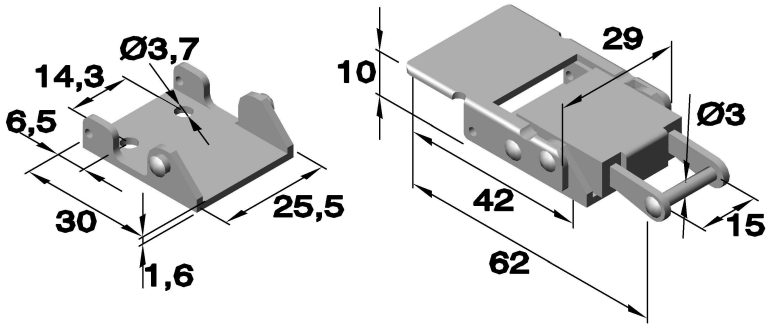

Art. no.: 3020 (drilled and countersunk)
with spring riveted triangle

Suitable Strikes: see chapter „B“
Art. no.: 3608._ _ Art. no.: 3622._ _
Art. no.: 3611._ _ Art. no.: 3625._ _
Art. no.: 3612._ _

Article no.	
Series	Material
	Zinc plated
	Steel
3020	.04

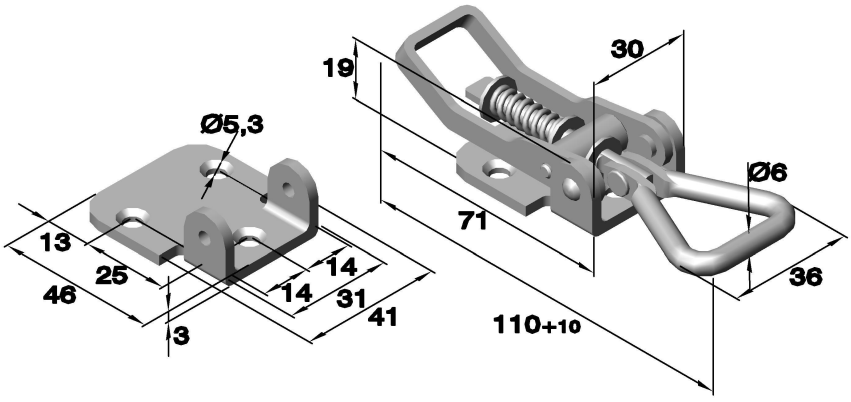

TÜVRheinland ZERTIFIZIERT
Management System ISO 9001:2015 ISO 14001:2015
www.tuv.com ID 9108624624

Further materials and surfaces finishes on demand. We will be pleased to give you advice.
Phone: +49 (0) 231 / 725 790 -0 eMail: info@hokon-verschlusstechnik.de
Fax: +49 (0) 231 / 725 790 -10 Homepage: www.hokon-verschlusstechnik.de

Spring latches

Art. no. 95L (drilled)

Tolerance compensation per spring clip
Tensile load max. 445 N
Operating load 220 N

Article no.	
Series	Material
	Raw
	Stainless steel
V95L07-1-1	BC

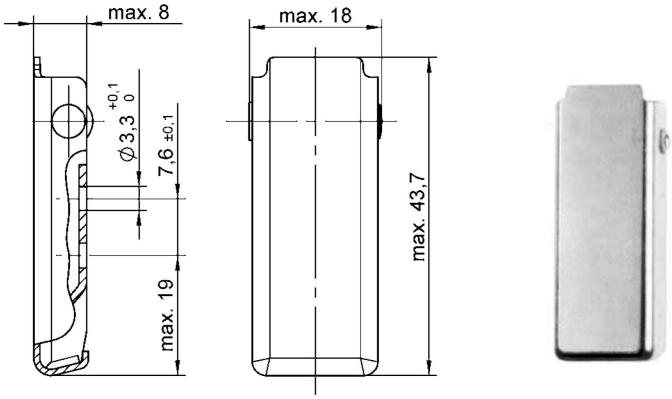

Art.No. 95L (drilled)

Tolerance compensation per spring clip
Tensile load max. 445 N
Operating load 220 N

Article no.	
Series	Material
	Chrome plated
	Steel
V95L15-1	BD

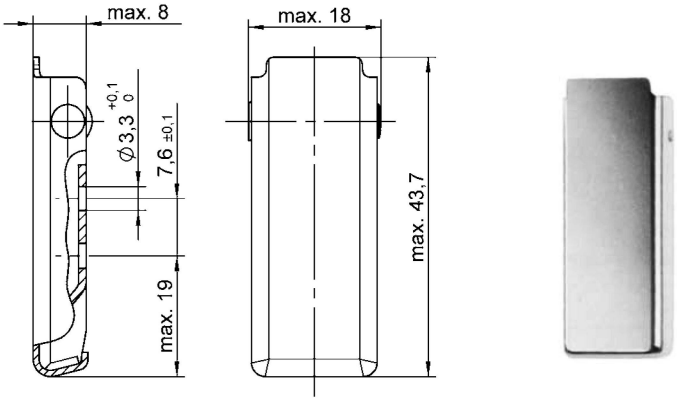

Suitable clamp

Article no.	
Series	Material
	Raw
	Stainless steel
V95H07-1-1	BC

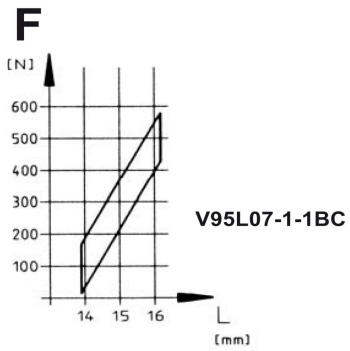

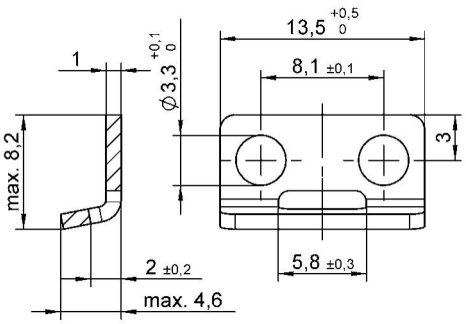

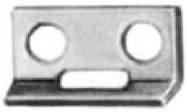

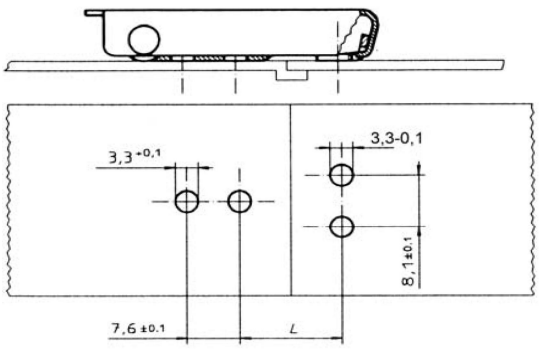

Spring latches

Art.No. V96L (drilled)

Tolerance compensation per spring clip
Tensile load max. 1000 N
Operating load 650 N

Article no.			hole Ø
Series	Material		
	Zinc plated	Chrome plated	
	Steel	Steel	
V96L01-1-	1AO	1AG	2,5
V96L01-1-	2AO	2AG	3,2

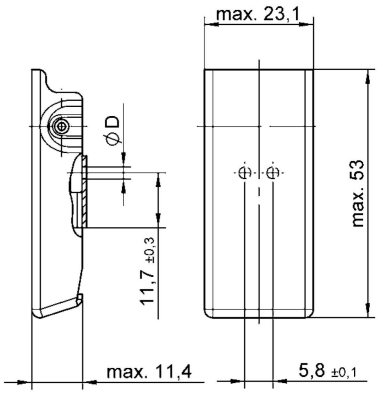



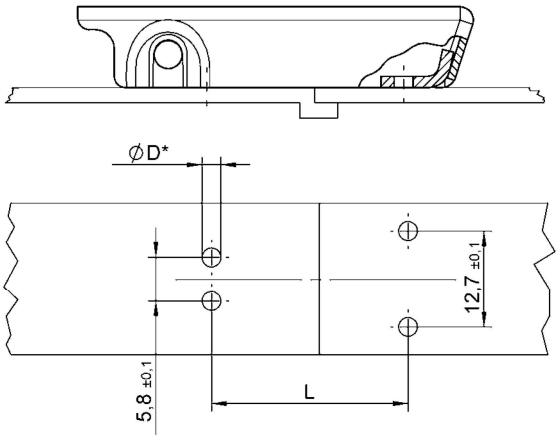

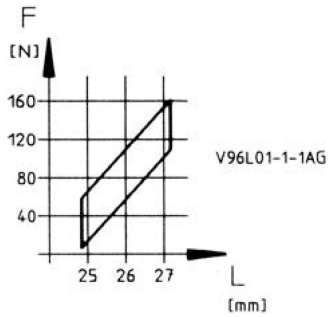

Hole diameter according to the selected design

Suitable clamp

Article no.		hole Ø
Series	Material	
	Zinc plated	
	Steel	
V96H01-1-	1AO	2,5
V96H01-1-	2AO	3,2

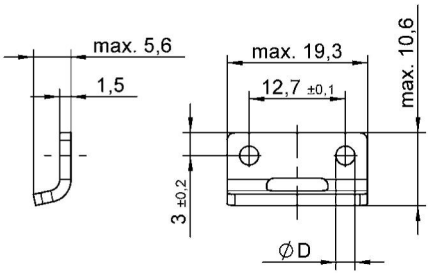

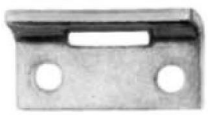

Management System ISO 9001:2015 ISO 14001:2015 TÜVRheinland ZERTIFIZIERT www.tuv.com ID 9108624624

Further materials and surfaces finishes on demand. We will be pleased to give you advice.
Phone: +49 (0) 231 / 725 790 -0 eMail: info@hokon-verschlusstechnik.de
Fax: +49 (0) 231 / 725 790 -10 Homepage: www.hokon-verschlusstechnik.de

„Butterfly“ latches

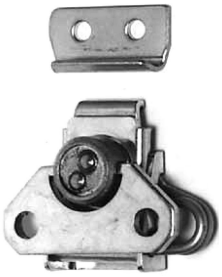

Art.:100.L0914

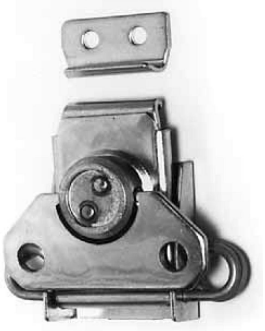

Art.:100.L0915



Art.:100.L0925

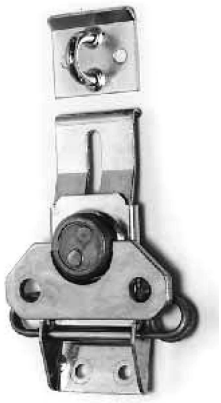

Art.:100.L0935

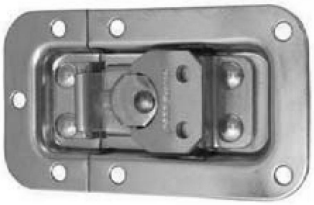

Art.:L903/7336

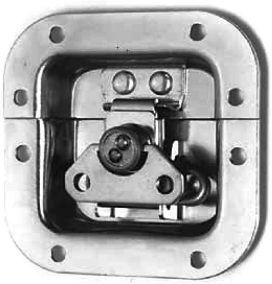

Art.:100.L904/914

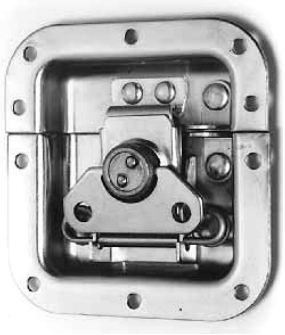

Art.:100.L905/915

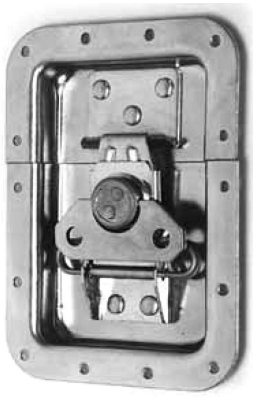

Art.:100.L925/530

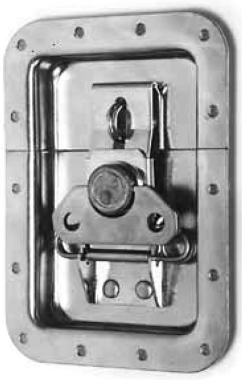

Art.:100.L935/530



Art.:L944/2525

latches
„Butterfly“

Art.no. 100.L 0914 (drilled)

Article no.		
Series	Material	
	Zinc plated	Coated black
	Steel	Steel
100.L 0914	.04	.07

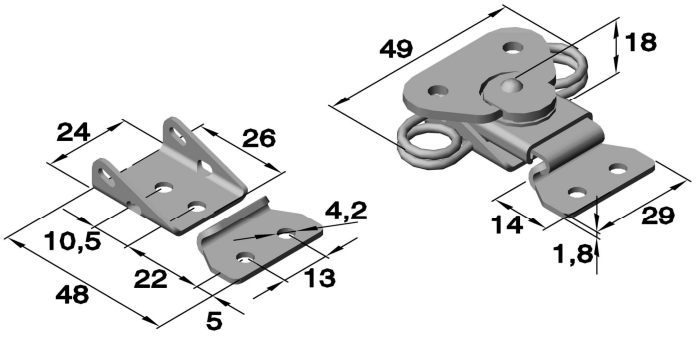

Art.no. 100.L 0915 (drilled)

Article no.		
Series	Material	
	Zinc plated	Coated black
	Steel	Steel
100.L 0915	.04	.07

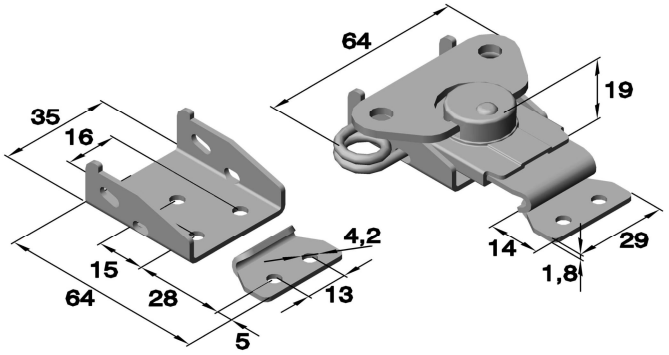

Art.no. 100.L 0925 (drilled)

Article no.			
Series	material		
	Zinc plated	Coated black	Polished
	Steel	Steel	Stainless steel
100.L 0925	.04	.07	.33

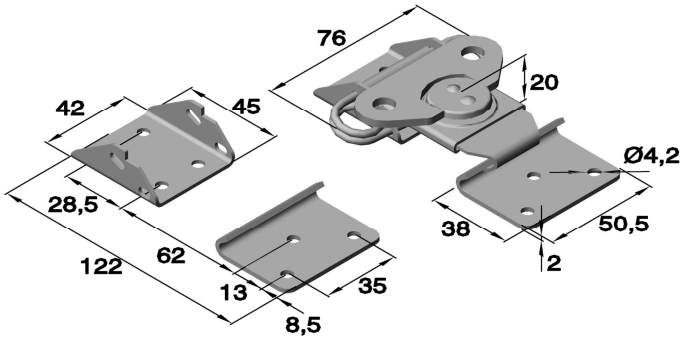

Art.no. 100.L 903/7336 (drilled)

Installation opening: 32 x 78
Depth 7mm

Article no.	
Series	Material
	Zinc plated
	Steel
100.L 903/7336	z.04

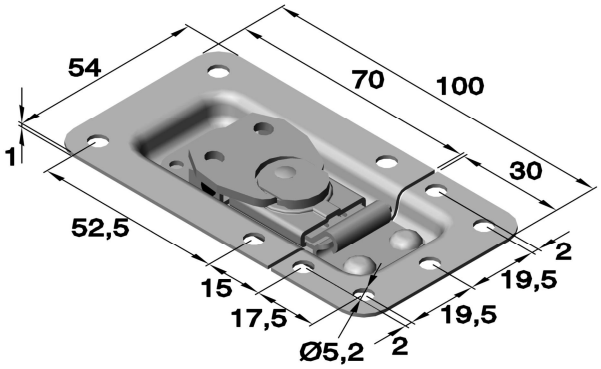

TÜVRheinland ZERTIFIZIERT
Management System ISO 9001:2015 ISO 14001:2015
www.tuv.com ID 9108624624

Further materials and surfaces finishes on demand. We will be pleased to give you advice.
Phone: +49 (0) 231 / 725 790 -0 eMail: info@hokon-verschlusstechnik.de
Fax: +49 (0) 231 / 725 790 -10 Homepage: www.hokon-verschlusstechnik.de

latches
„Butterfly“

Art.no. 100.L 904/914 (drilled)

Installation opening: 65 x 64
Depth 13mm

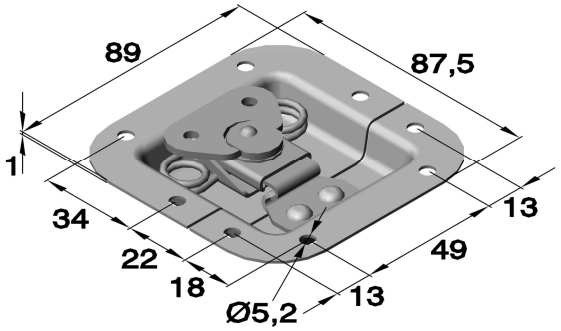

Article no.		
Series	Material	
	Zinc plated	
	Steel	
100.L 904/914	.04	

Art.no. 100.L 905/915 (drilled)

Installation opening: 78 x 82
Depth 13mm

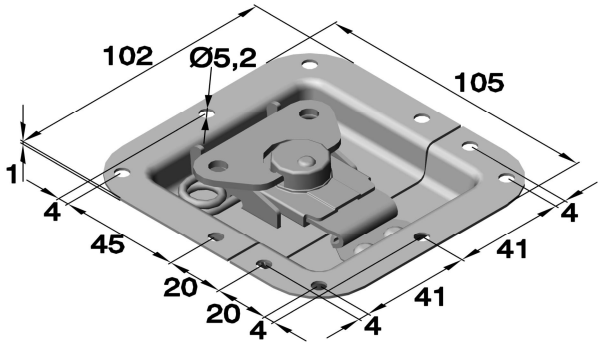

Article no.			
Series	Material		
	Zinc plated	Coated black	Polished
	Steel	Steel	Stainless steel
100.L 905/915	.04	.07	.33

Art.no. 100.L 925/530 (drilled)

Installation opening: 96 x 145
Depth 15,5mm

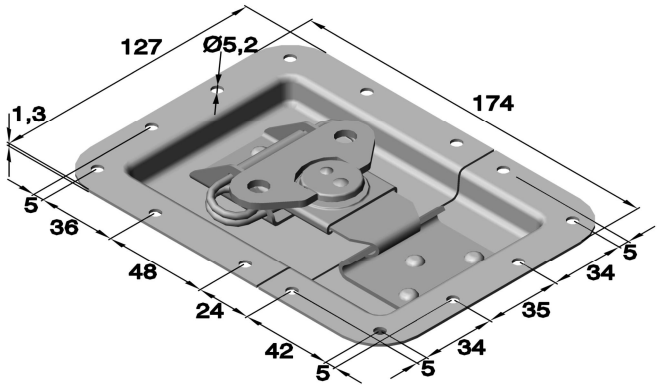

Article no.		
Series	Material	
	Zinc plated	Coated black
	Steel	Steel
100.L 925/530	.04	.07

latches
„Butterfly“

Art.no. 100.L 925/530 (drilled)

Installation opening: 96 x 145
Depth 15,5mm

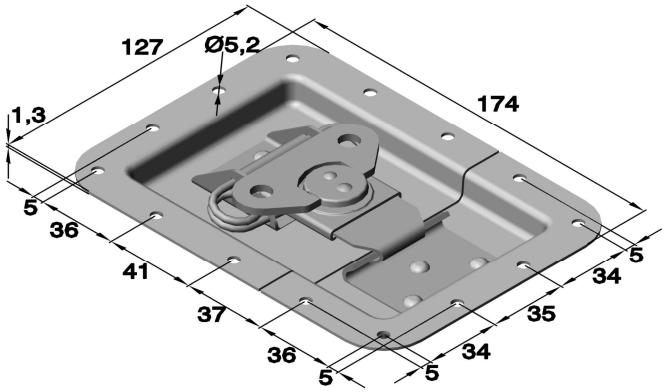

Article no.	
Series	Material
	Polished
	Stainless steel
100.L 925/530	.33

Art.no. 100.L 944/530 (drilled)

Installation opening: 96 x 145
Depth 15,5mm

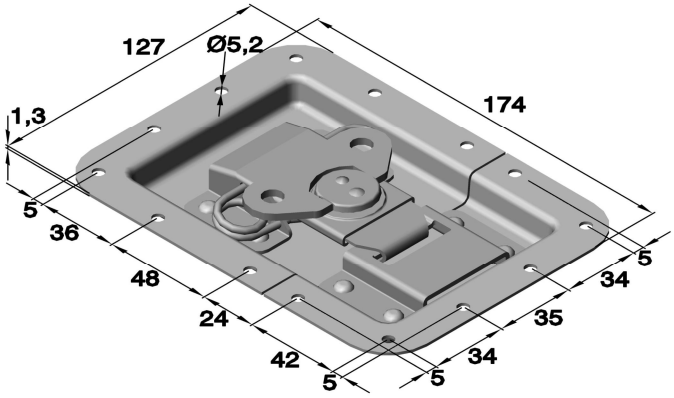

Article no.	
Series	Material
	Zinc plated
	Steel
100.L 944/530	.04

Art.no. 100.L 944/2525 (drilled)

Installation opening: 94 x 143
Depth 9mm

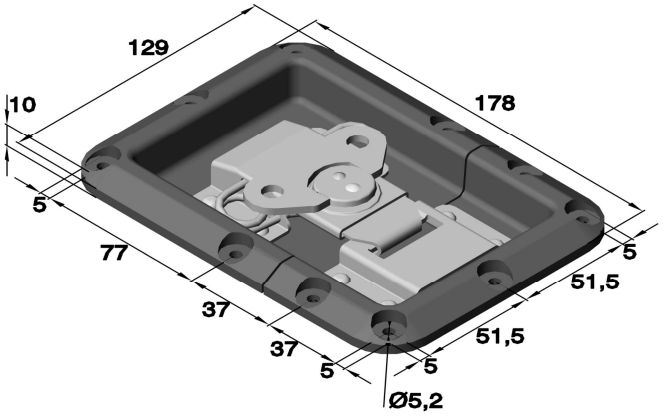

Article no.	
Series	Material
	Black
	ABS- plastic
100.L 944/2525	.87

TÜVRheinland ZERTIFIZIERT Management System ISO 9001:2015 ISO 14001:2015 www.tuv.com ID 9108624624

Further materials and surfaces finishes on demand. We will be pleased to give you advice.
Phone: +49 (0) 231 / 725 790 -0 eMail: info@hokon-verschlusstechnik.de
Fax: +49 (0) 231 / 725 790 -10 Homepage: www.hokon-verschlusstechnik.de

Strikes



Strikes

Art. no.: 1001 (drilled and countersunk)

Strike for latch: see chapter „A“
Art. no.: 1001._ _/6
Art. no.: 1002._ _/6
Art. no.: 1003._ _/6
Art. no.: 1004._ _/6
Art. no.: 1021._ _/6
Art. no.: 1070._ _/6

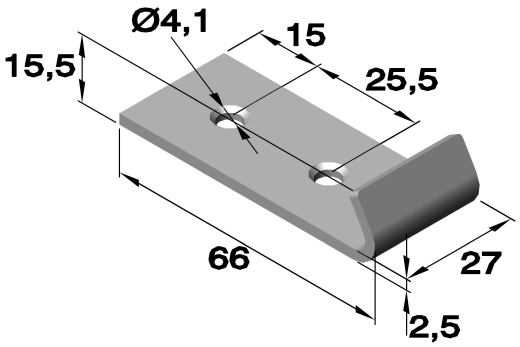

Article no.				
Series	Material			
	Raw	Nickel-plated	Zinc plated	Stainless steel
	Steel	Steel	Steel	1.4301
1001	.00/5	.01/5	.04/5	.30/5

Art. no.: 1006 (drilled)

Strike for latch: see chapter „A“
Art. no.: 1006._ _/6
Art. no.: 1007._ _/6

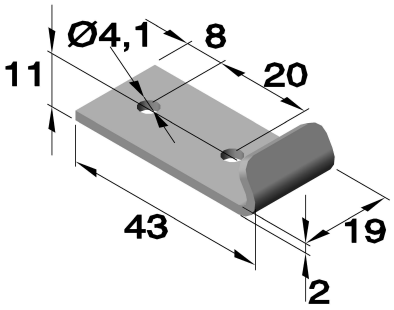

Article no.				
Series	Material			
	Raw	Nickel-plated	Zinc plated	Stainless steel
	Steel	Steel	Steel	1.4301
1006	.00/5	.01/5	.04/5	.30/5

Art. no.: 1008 (drilled and countersunk)

Strike for latch: see chapter „A“
Art. no.: 1008._ _/6

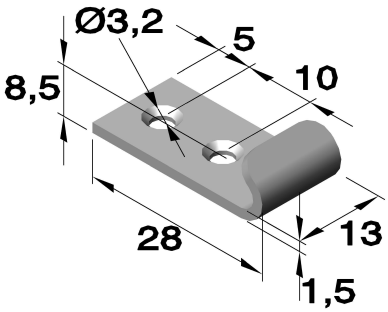

Article no.				
Series	Material			
	Raw	Nickel-plated	Zinc plated	Stainless steel
	Steel	Steel	Steel	1.4301
1008	.00/5	.01/5	.04/5	.30/5

Art. no.: 1009 (drilled and countersunk)

Strike for latch: see chapter „A“
Art. no.: 1009._ _/6
Art. no.: 1010._ _/6
Art. no.: 1012._ _/6

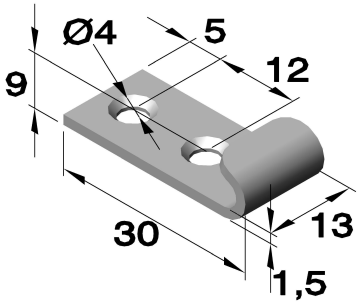

Article no.				
Series	Material			
	Raw	Nickel-plated	Zinc plated	Stainless steel
	Steel	Steel	Steel	1.4301
1009	.00/5	.01/5	.04/5	.30/5

TÜVRheinland ZERTIFIZIERT Management System ISO 9001:2015 ISO 14001:2015 www.tuv.com ID 9108624624

Further materials and surface finishes on demand. We will be pleased to give you advise.
Phone: +49 (0) 231 / 725 790 -0
Fax: +49 (0) 231 / 725 790 -10
EMail: info@hokon-verschlusstechnik.de
Homepage: www.hokon-verschlusstechnik.de

Strikes

Art. no.: 1013 (drilled)

Strike for latch: see chapter „A“
Art. no.: 1013._ _/6
Art. no.: 1014._ _/6

Article no.				
Series	Material			
	Raw	Nickel-plated	Zinc plated	Stainless steel
	Steel	Steel	Steel	1.4301
1013	.00/5	.01/5	.04/5	.30/5

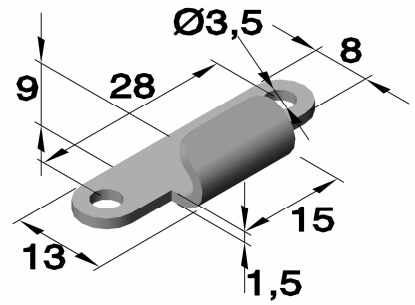

Art. no.: 1013

Strike for latch: see chapter „A“
Art. no.: 1013._ _/6
Art. no.: 1014._ _/6

Article no.	
Series	Material
	Raw
	Steel
1013	.00/5-10

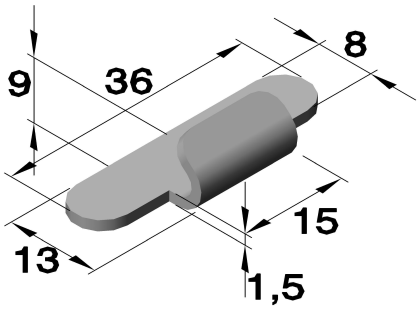

Art. no.: 1015 (drilled)

Strike for latch: see chapter „A“
Art. no.: 1015._ _/6 Art. no.: 1017._ _/6
Art. no.: 1016._ _/6 Art. no.: 1018._ _/6

Article no.				
Series	Material			
	Raw	Nickel-plated	Zinc plated	Stainless steel
	Steel	Steel	Steel	1.4301
1015	.00/5	.01/5	.04/5	.30/5

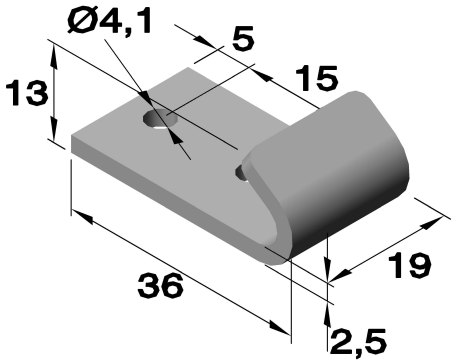

Art. no.: 1023 (drilled)

Strike for latch: see chapter „A“
Art. no.: 1023._ _/6

Article no.	
Series	Material
	Zinc plated
	Steel
1023	.04/5

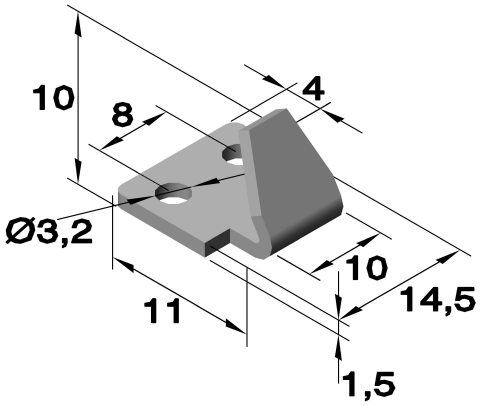

Strikes

Art. no.: 1024 (drilled)

Strike for latch: see chapter „A“
Art. no.: 1024._ _/6
Art. no.: 1025._ _/6

Article no.		
Series	Material	
	Zinc plated	Stainless steel
	Steel	1.4301
1024	.04/5	.30/5

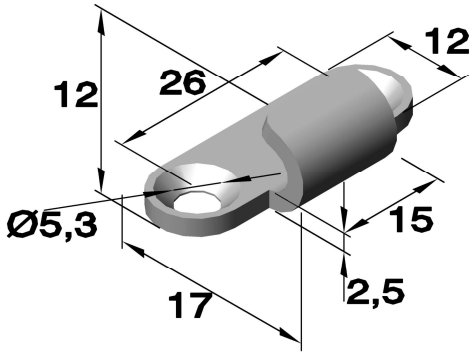

Art. no.: 1027 (drilled)

Strike for latch: see chapter „A“
Art. no.: 1027._ _/6
Art. no.: 1028._ _/6

Article no.		
Series	Material	
	Nickel-plated	Zinc plated
	Steel	Steel
1027	.01/5	.04/5

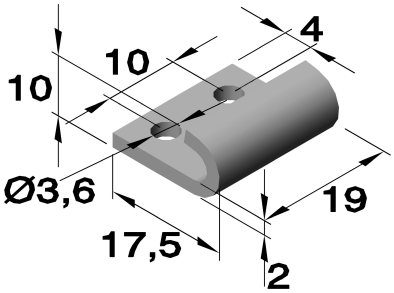

Art. no.: 1029 (drilled)

Strike for latch: see chapter „A“
Art. no.: 1029._ _/6
Art. no.: 1030._ _/6

Article no.	
Series	Material
	Zinc plated
	Steel
1029	.04/5

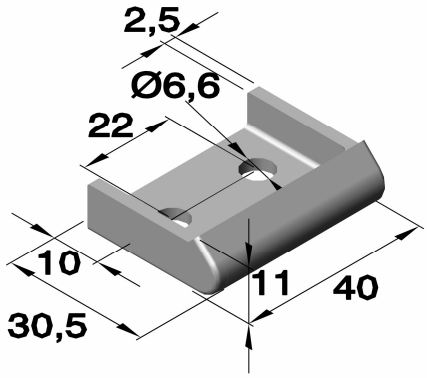

Art. no.: 1031 (drilled)

Strike for latch: see chapter „A“
Art. no.: 1031._ _/6 Art. no.: 1033._ _/6
Art. no.: 1032._ _/6

Article no.		
Series	Material	
	Zinc plated	Stainless steel
	Steel	1.4301
1031	.04/5	.30/5

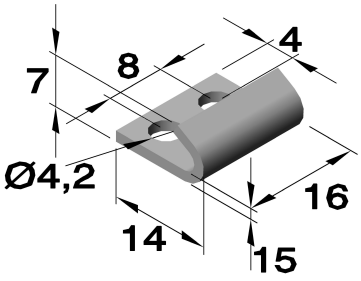

TÜVRheinland ZERTIFIZIERT
Management System ISO 9001:2015 ISO 14001:2015
www.tuv.com ID 9108624624

Further materials and surface finishes on demand. We will be pleased to give you advise.
Phone: +49 (0) 231 / 725 790 -0 EMail: info@hokon-verschlusstechnik.de
Fax: +49 (0) 231 / 725 790 -10 Homepage: www.hokon-verschlusstechnik.de

Strikes

Art. no.: 1034 (drilled)

Strike for latch: see chapter „A“
Art. no.: 1034._ _/6
Art. no.: 1035._ _/6

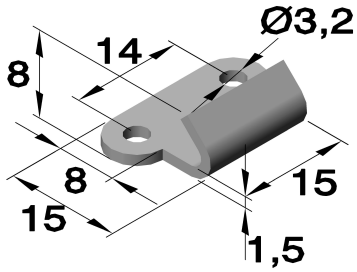

Article no.		
Series	Material	
	Zinc plated	Stainless steel
	Steel	1.4301
1034	.04/5	.30/5

Art. no.: 1036 (drilled)

Strike for latch: see chapter „A“
Art. no.: 1036._ _/6
Art. no.: 1037._ _/6

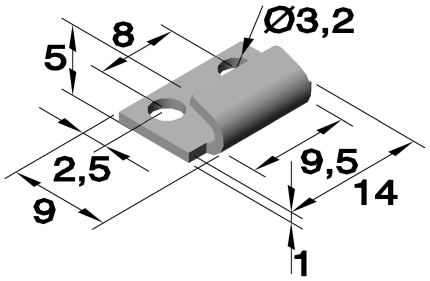

Article no.	
Series	Material
	Zinc plated
	Steel
1036	.04/5

Art. no.: 1038 (drilled)

Strike for latch: see chapter „A“
Art. no.: 1038._ _/6

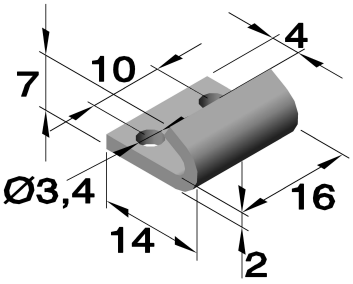

Article no.	
Series	Material
	Zinc plated
	Steel
1038	.04/5

Art. no.: 1039 (drilled)

Strike for latch: see chapter „A“
Art. no.: 1022._ _/6
Art. no.: 1039._ _/6

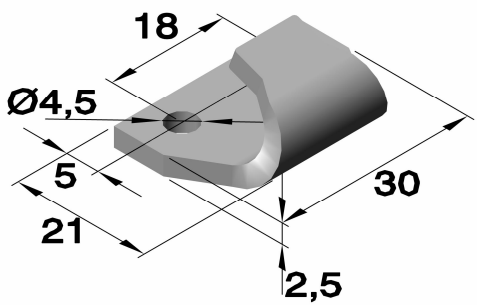

Article no.		
Series	Material	
	Zinc plated	Bronzed
	Steel	Steel
1039	.04/5	.05/5

Strikes

Art. no.: 3601 (drilled)

Strike for latch: see chapter „A“
Art. no.: 3001

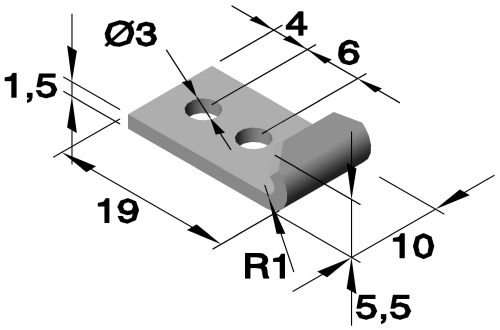

Article no.	
Series	Material
	Zinc plated
	Steel
3601	.04

Art. no.: 3602 (drilled)

Strike for latch: see chapter „A“
Strike for latch: see chapter „A“
Art. no.: 1008.__ Art. no.: 1010.__ Art. no.: 1013.__
Art. no.: 1009.__ Art. no.: 1012.__ Art. no.: 1014.__

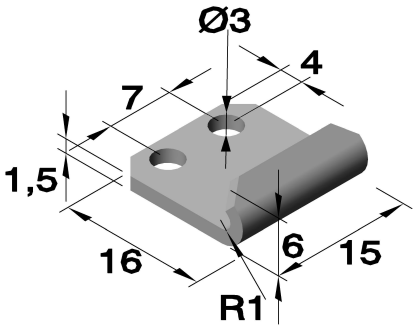

Article no.	
Series	Material
	Zinc plated
	Steel
3602	.04

Art. no.: 3603 (drilled)

Strike for latch: see chapter „A“
Art. no.: 3003

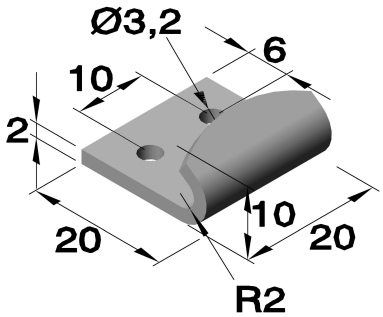

Article no.	
Series	Material
	Zinc plated
	Steel
3603	.04

Art. no.: 3604

Strike for latch: see chapter „A“
Art. no.: 3004.__ Art. no.: 3007.__
Art. no.: 3005.__ Art. no.: 3008.__
Art. no.: 3006.__ Art. no.: 3009.__

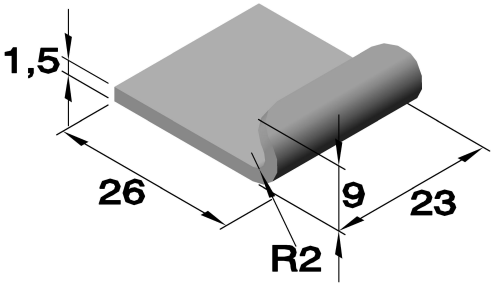

Article no.	
Series	Material
	Raw
	Steel
3604	.00-U1

TÜVRheinland ZERTIFIZIERT Management System ISO 9001:2015 ISO 14001:2015 www.tuv.com ID 9108624624

Further materials and surface finishes on demand. We will be pleased to give you advise.
Phone: +49 (0) 231 / 725 790 -0 EMail: info@hokon-verschlusstechnik.de
Fax: +49 (0) 231 / 725 790 -10 Homepage: www.hokon-verschlusstechnik.de

Strikes

Art. no.: 3604 (drilled)

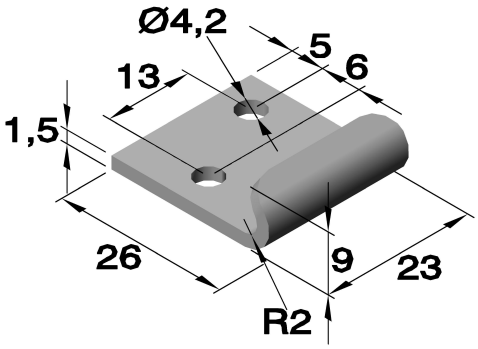

Strike for latch: see chapter „A“
Art. no.: 3004.__ Art. no.: 3007.__
Art. no.: 3005.__ Art. no.: 3008.__
Art. no.: 3006.__ Art. no.: 3009.__

Article no.	
Series	Material
	Zinc plated
	Steel
3604	.04

Art. no.: 3605 (drilled and countersunk)

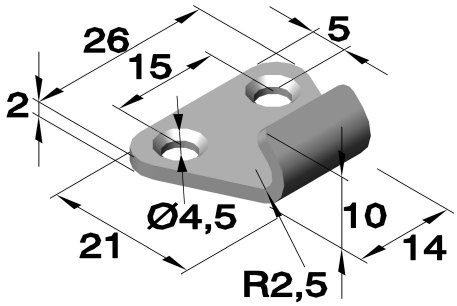

Strike for latch: see chapter „A“
Art. no.: 3012.__ Art. no.: 3014.__
Art. no.: 3013.__

Article no.		
Series	Material	
	Zinc plated	Stainless steel
	Steel	1.4301
3605	.04	.30

Art. no.: 3606 (drilled and countersunk)

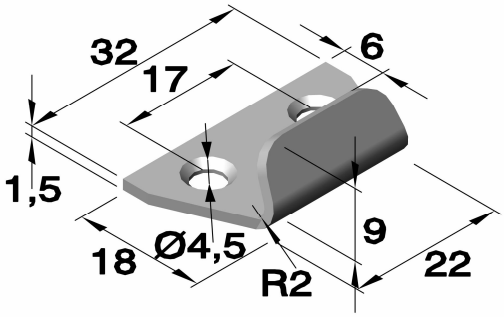

Strike for latch: see chapter „A“
Art. no.: 3007.__ Art. no.: 3009.__
Art. no.: 3008.__

Article no.	
Series	Material
	Zinc plated
	Steel
3606	.04

Art. no.: 3607 (drilled)

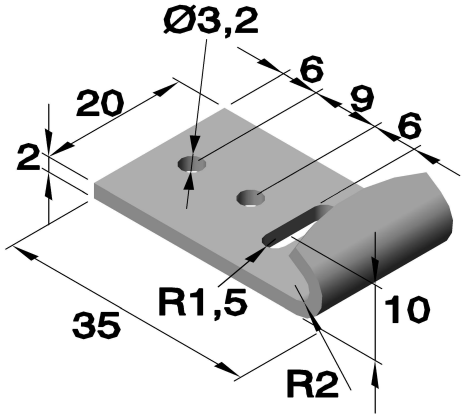

Strike for latch: see chapter „A“
Art. no.: 3003.__

Article no.		
Series	Material	
	Zinc plated	Stainless steel
	Steel	1.4301
3607	.04	.30

Strikes

Art. no.: 3608 (drilled and countersunk)

Strike for latch: see chapter „A“
Art. no.: 3010.__ Art. no.: 3018.__
Art. no.: 3011.__ Art. no.: 3019.__
Art. no.: 3015.__ Art. no.: 3020.__

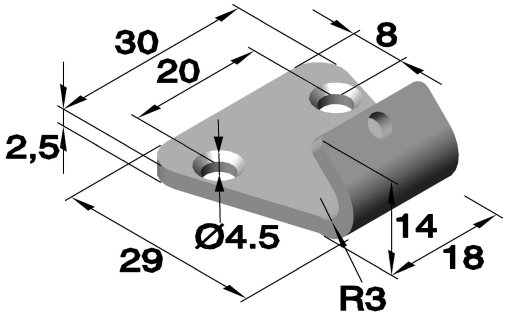

Article no.			
Series	Material		
	Zinc plated	Stainless steel	Polished stainless steel
	Steel	1.4301	1.4301
3608	.04	.30	.33

Art. no.: 3608

Strike for latch: see chapter „A“
Art. no.: 3010.__ Art. no.: 3018.__
Art. no.: 3011.__ Art. no.: 3019.__
Art. no.: 3015.__ Art. no.: 3020.__

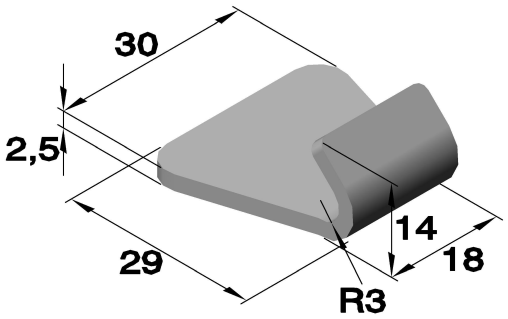

Article no.			
Series	Material		
	Raw	Zinc plated	Stainless steel
	Steel	Steel	1.4301
3608	.00-U1	.04-U1	.30-U1

Art. no.: 3609

Strike for latch: see chapter „A“
Art. no.: 3017.__

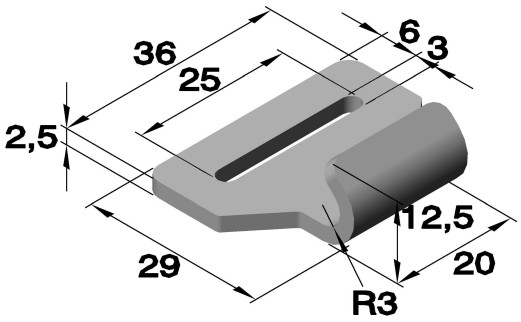

Article no.		
Series	Material	
	Zinc plated	Stainless steel
	Steel	1.4301
3609	.04	.30

Art. no.: 3610 (drilled)

Strike for latch: see chapter „A“
Art. no.: 3007.__ Art. no.: 3009.__
Art. no.: 3008.__

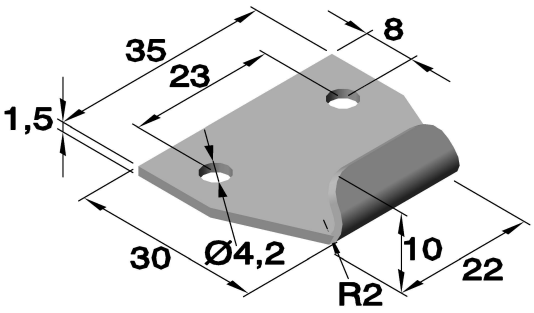

Article no.		
Series	Material	
	Zinc plated	Stainless steel
	Steel	1.4301
3610	.04	.30

TÜVRheinland ZERTIFIZIERT Management System ISO 9001:2015 ISO 14001:2015 www.tuv.com ID 9108624624

Further materials and surface finishes on demand. We will be pleased to give you advise.
Phone: +49 (0) 231 / 725 790 -0 EMail: info@hokon-verschlusstechnik.de
Fax: +49 (0) 231 / 725 790 -10 Homepage: www.hokon-verschlusstechnik.de

Strikes

Art. no.: 3611 (drilled and countersunk)

Strike for latch: see chapter „A“
Art. no.: 3010.__ Art. no.: 3018.__
Art. no.: 3011.__ Art. no.: 3019.__
Art. no.: 3015.__ Art. no.: 3020.__

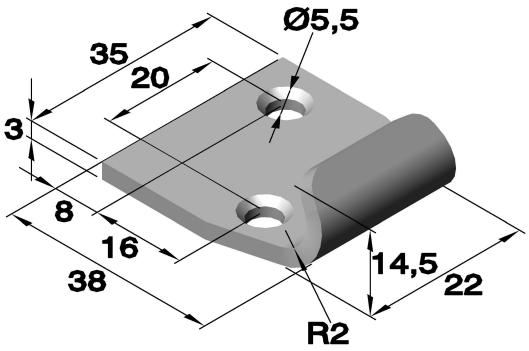

Article no.			
Series	Material		
	Zinc plated	Stainless steel	Polished stainless steel
	Steel	1.4301	1.4301
3611	.04	.30	.33

Art. no.: 3612 (drilled and countersunk)

Strike for latch: see chapter „A“
Art. no.: 3010.__ Art. no.: 3019.__
Art. no.: 3011.__ Art. no.: 3020.__
Art. no.: 3015.__ Art. no.: 3320.__
Art. no.: 3018.__ Art. no.: 3520.__

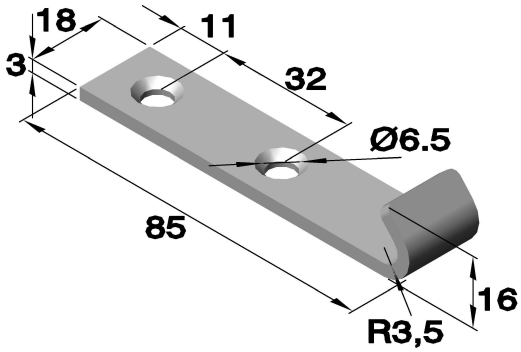

Article no.				
Series	Material			
	Raw	Zinc plated	Stainless steel	Polished stainless steel
	Steel	Steel	1.4301	1.4301
3612	.00	.04	.30	.33

Art. no.: 3615 (drilled and countersunk)

Strike for latch: see chapter „A“
Art. no.: 3320.__ Art. no.: 3520.__

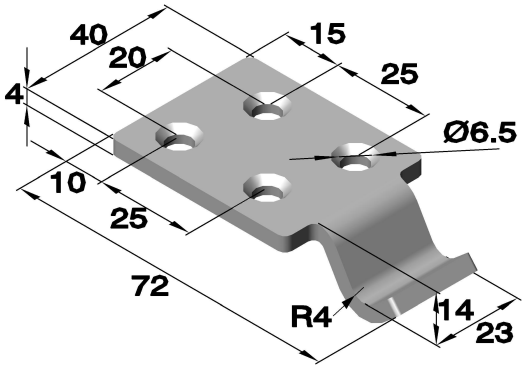

Article no.	
Series	Material
	Zinc plated
	Steel
3615	.04

Art. no.: 3616 (drilled and countersunk)

Strike for latch: see chapter „A“
Art. no.: 3012.__ Art. no.: 3014.__
Art. no.: 3013.__

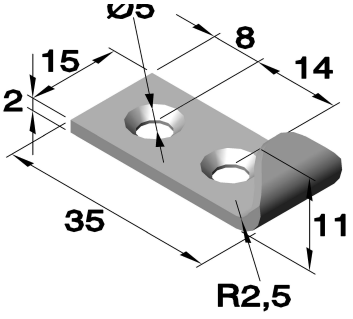

Article no.	
Series	Material
	Zinc plated
	Steel
3616	.04

Strikes

Art. no.: 3618 (drilled and countersunk)

Strike for latch: see chapter „A“
Art. no.: 3012.__ Art. no.: 3014.__
Art. no.: 3013.__

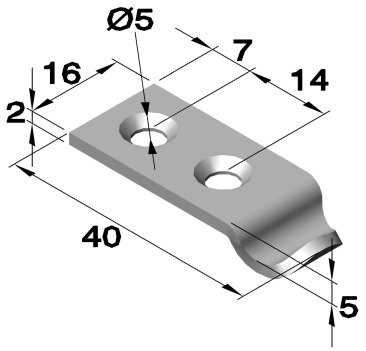

Article no.		
Series	Material	
	Zinc plated	Stainless steel
	Steel	1.4301
3618	.04	.30

Art. no.: 3619 (drilled and countersunk)

Strike for latch: see chapter „A“
Art. no.: 3004.__ Art. no.: 3007.__
Art. no.: 3005.__ Art. no.: 3008.__
Art. no.: 3006.__ Art. no.: 3009.__

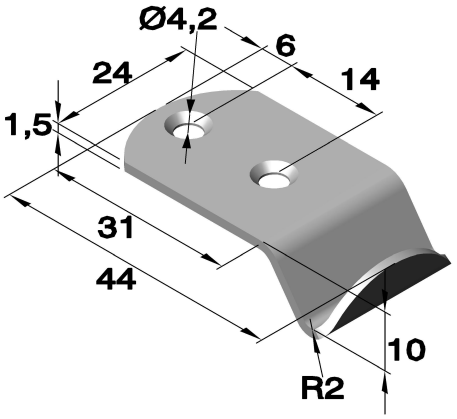

Article no.	
Series	Material
	Zinc plated
	Steel
3619	.04

Art. no.: 3620 (drilled and countersunk)

Strike for latch: see chapter „A“
Art. no.: 3320.__
Art. no.: 3520.__

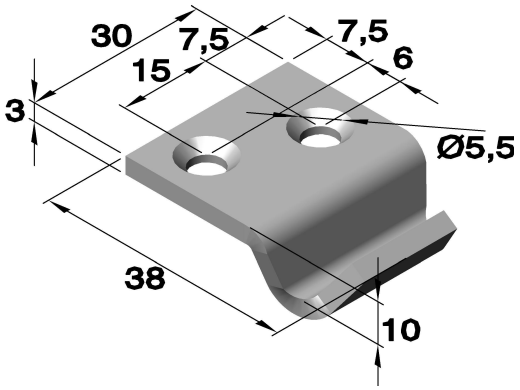

Article no.	
Series	Material
	Zinc plated
	Steel
3620	.04

Art.Nr. 3620 (drilled and countersunk)

Strike for latch: see chapter „A“
Art.no. 3320.__
Art.no. 3520.__

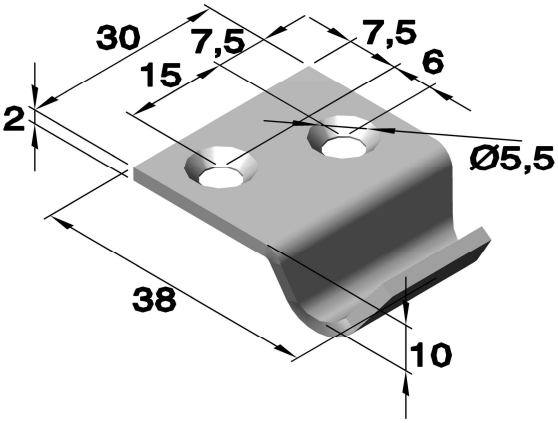

Article no.		
Series	Material	
	Raw	Polished
	Stainless steel	Stainless steel
3620	.30	.33

TÜVRheinland ZERTIFIZIERT Management System ISO 9001:2015 ISO 14001:2015 www.tuv.com ID 9108624624

Further materials and surface finishes on demand. We will be pleased to give you advise.
Phone: +49 (0) 231 / 725 790 -0 EMail: info@hokon-verschlusstechnik.de
Fax: +49 (0) 231 / 725 790 -10 Homepage: www.hokon-verschlusstechnik.de

Strikes

Art. no.: 3622 (drilled and countersunk)

Strike for latch: see chapter „A“
Art. no.: 3010.__ Art. no.: 3018.__ Art. no.: 3320.__
Art. no.: 3011.__ Art. no.: 3019.__ Art. no.: 3520.__
Art. no.: 3015.__ Art. no.: 3020.__

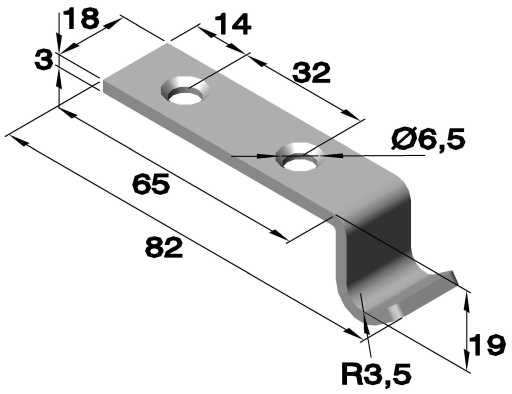

Article no.		
Series	Material	
	Zinc plated	Polished stainless steel
	Steel	1.4301
3622	.04	.33

Art. no.: 3623 (drilled and countersunk)

Strike for latch: see chapter „A“
Art. no.: 3320.__
Art. no.: 3520.__

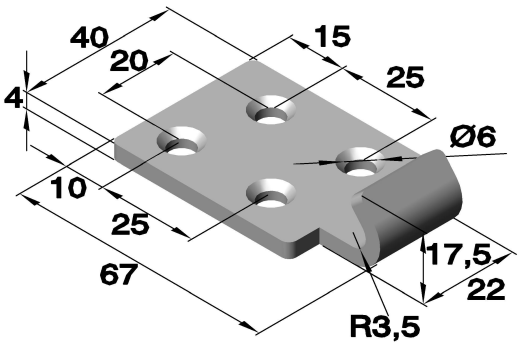

Article no.	
Series	Material
	Zinc plated
	Steel
3623	.04

Art. no.: 3624 (drilled and countersunk)

Strike for latch: see chapter „A“
Art. no.: 3320.__
Art. no.: 3520.__

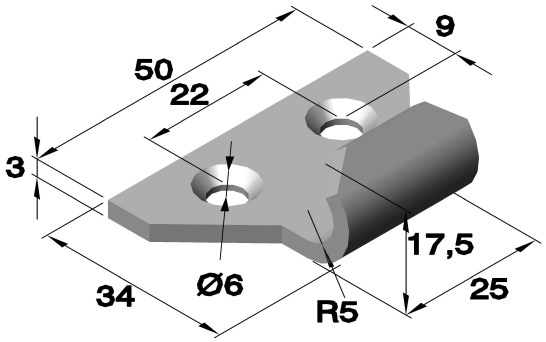

Article no.	
Series	Material
	Stainless steel
	1.4301
3624	.30

Art. no.: 3624.__RF-3 (drilled and countersunk)

Strike for latch: see chapter „A“
Art. no.: 3320.__
Art. no.: 3520.__

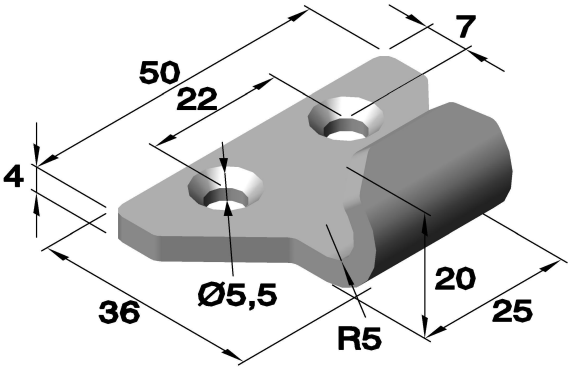

Article no.	
Series	Material
	Stainless steel
	1.4301
3624	.30RF-3

Strikes

Art. no.: 3625 (drilled and countersunk)

Strike for latch: see chapter „A“
Art. no.: 3010.__ Art. no.: 3018.__
Art. no.: 3011.__ Art. no.: 3019.__
Art. no.: 3015.__ Art. no.: 3020.__

Article no.		
Series	Material	
	Zinc plated	Stainless steel
	Steel	1.4301
3625	.04	.30

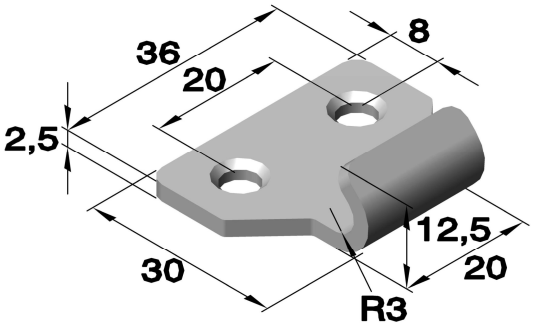

Art. no.: 3626 (drilled and countersunk)

Strike for latch: see chapter „A“
Art. no.: 3320.__
Art. no.: 3520.__

Article no.	
Series	Material
	Stainless steel
	1.4301
3626	.30

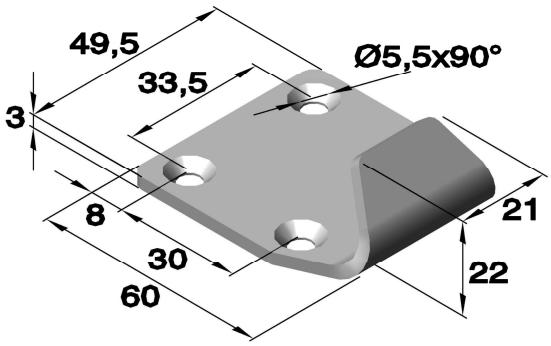

Art.no. 3626.__-U1

Strike for latch: see chapter „A“
Art.no. 3320.__
Art.no. 3520.__

Article no.	
Series	Material
	Raw
	Stainless steel
3626	.30-U1

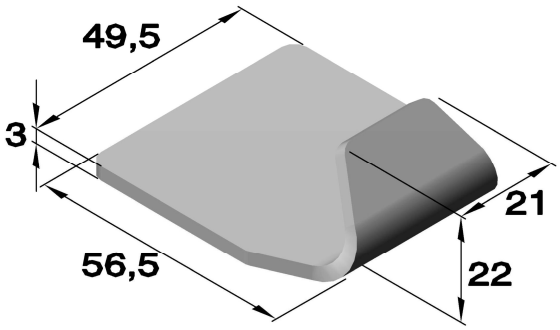

Art. no.: 3627 (drilled)

Strike for latch: see chapter „A“

Article no.	
Series	Material
	Nickel-plated
	Steel
3627	.01

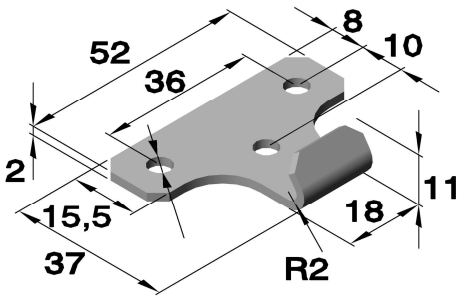

TÜVRheinland ZERTIFIZIERT Management System ISO 9001:2015 ISO 14001:2015 www.tuv.com ID 9108624624

Further materials and surface finishes on demand. We will be pleased to give you advise.
Phone: +49 (0) 231 / 725 790 -0 EMail: info@hokon-verschlusstechnik.de
Fax: +49 (0) 231 / 725 790 -10 Homepage: www.hokon-verschlusstechnik.de

Strikes

Art.no. 3633. (drilled)

Strike for latch: see chapter „A“

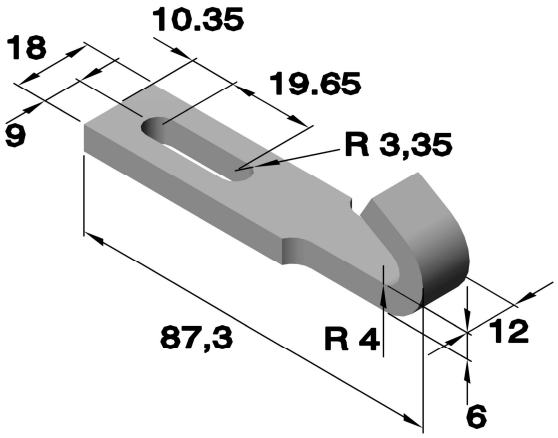

Article no.	
Series	Material
	Zinc plated
	Steel
3633	.04

Art. no.: 6200. (drilled)

Strike for latch: see chapter „A“
Art. no.: 6200.01.30
Art. no.: 6201.01.30
Art. no.: 6203.01.30

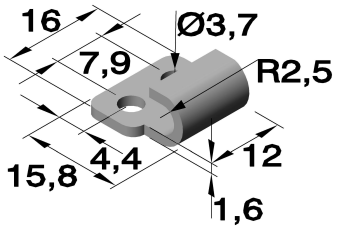

Article no.		
Series	Material	
	Zinc plated	Stainless steel
	Steel	1.4301
6200	.04	.30

Art. no.: 6375.02. (drilled)

Strike for latch: see chapter „A“
Art. no.: 6370.04

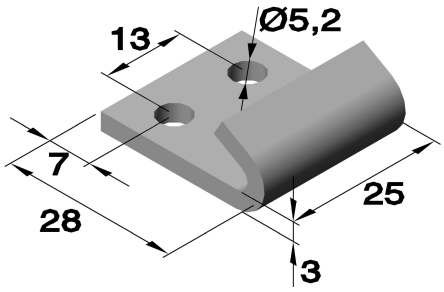

Article no.	
Series	Material
	Zinc plated
	Steel
6375.02	.04

Art. no.: 6379.01. (drilled)

Strike for latch: see chapter „A“
Art. no.: 6208.02.30

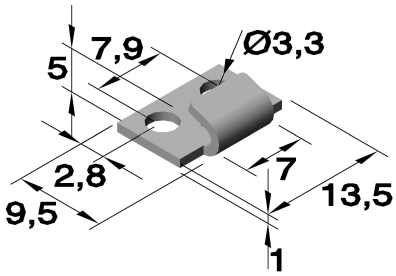

Article no.	
Series	Material
	Stainless steel
	1.4301
6379.01	.30

Strikes

Art. no.: 6603. (drilled)

Strike for latch: see chapter „A“
Art. no.: 6602.__.

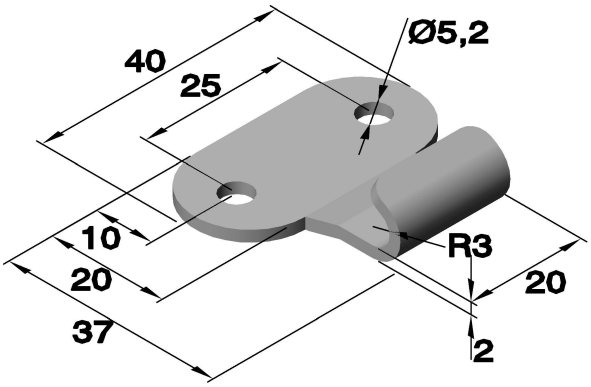

Article no.			
Series	Material		
	Stainless steel	Zinc plated	Stainless steel
	1.4301	Steel	1.4301
6603	Without holes .03.30	.05.04	.06.30

Art. no.: 6605. (drilled)

Strike for latch: see chapter „A“
Art. no.: 6255.__.
Art. no.: 6604.__.

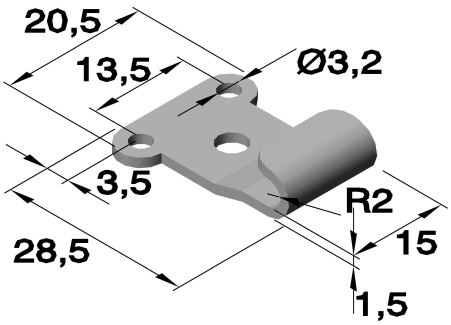

Article no.				
Series	Material			
	Zinc plated	Zinc plated	Stainless steel	Stainless steel
	Steel	Steel	1.4301	1.4301
6605	Without holes .01.04	.02.04	Without holes .03.30	.06.30

TÜVRheinland ZERTIFIZIERT Management System ISO 9001:2015 ISO 14001:2015 www.tuv.com ID 9108624624

Further materials and surface finishes on demand. We will be pleased to give you advise.
Phone: +49 (0) 231 / 725 790 -0 EMail: info@hokon-verschlusstechnik.de
Fax: +49 (0) 231 / 725 790 -10 Homepage: www.hokon-verschlusstechnik.de

HoKon

VERSCHLUSSTECHNIK &
SONDERKONSTRUKTIONEN

Zertifiziert nach DIN EN ISO 9001:2008



Tension bands
Hose clamps

Hose clips
Pipe clips

"Band-IT" tension bands and cable ties

TÜVRheinland
ZERTIFIZIERT

Management System
ISO 9001:2015
ISO 14001:2015

www.tuv.com
ID 9108624624



FOLDER 2

TENSION BANDS AND HOSE CLAMPS

FOLDER 1 LATCHES

FOLDER 2 TENSION BANDS

TENSION BANDS AND HOSE CLAMPS.....C

- TENSION BANDS AND HOSE CLAMPS C-1
- „BAND-IT“ TENSION BANDS AND CABLE TIES.....C-31
- HOSE CLIPS AND PIPE CLIPS.....C-51

FOLDER 3 HANDLES

FOLDER 4 HINGES

FOLDER 5 LOCKING DEVICES

FOLDER 6 THREADED INSERTS

FOLDER 7 SUNDRIES

GENERAL TERMS AND CONDITIONS.....

Tension bands and hose clamps



Tension bands and hose clamps

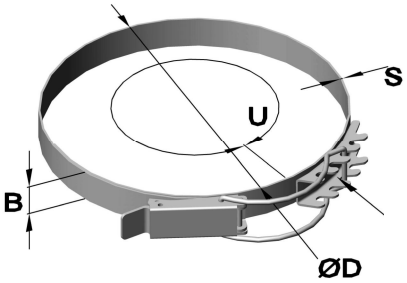

spot welded

Series1201
tension band
with and without
spring

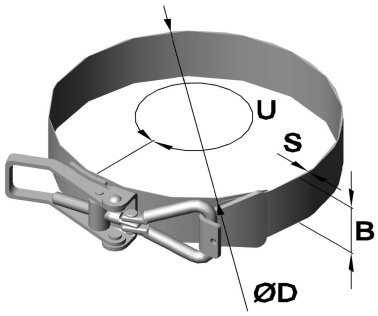

Series 1301
tension band

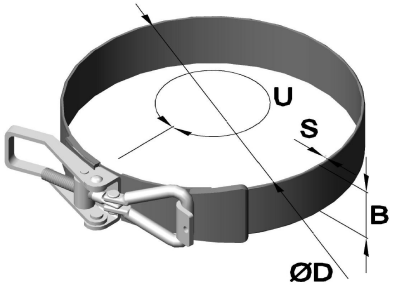

Series 1401
tension band with
plastic coating

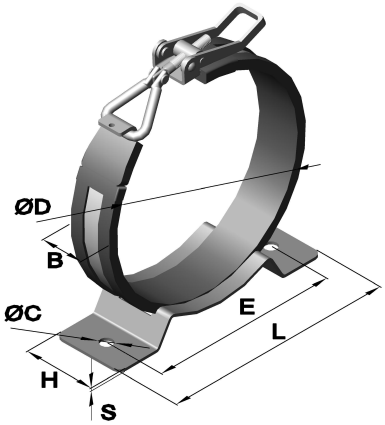

Series 1501
hose clamp
with console and
C-rubber profile

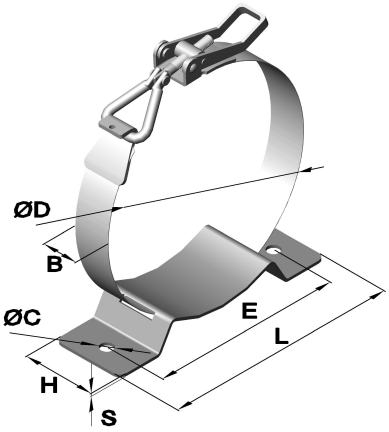

Series 1601
hose clamp
with console

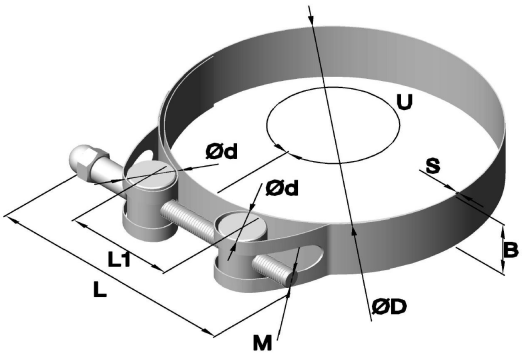

Series 1701
hinge bolt-tension band

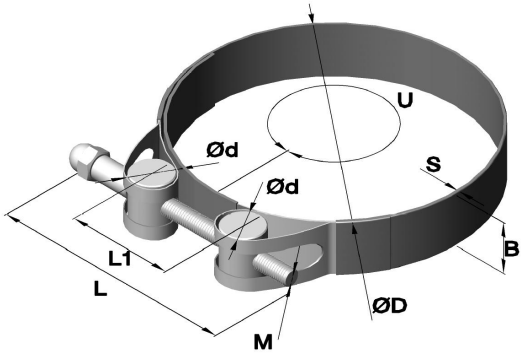

Series 1801
hinge bolt-tension band
with rubber profile

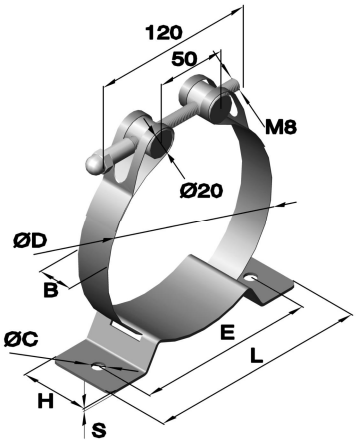

Series 1901 Type1
hose clamp with
console and hinge bolt

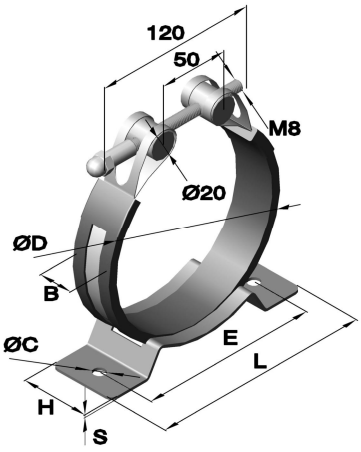

Series 1901 Type2
hose clamp with console, C-rubber
profile and hinge bolt

TÜVRheinland ZERTIFIZIERT
Management System
ISO 9001:2015
ISO 14001:2015
www.tuv.com ID 9108624624

Further materials and surface finishes on demand. We will be pleased to give you advice!
Phone: +49 (0) 231 / 725 790 -0 eMail: info@hokon-verschlusstechnik.de
Fax: +49 (0) 231 / 725 790 -10 Homepage: www.hokon-verschlusstechnik.de

Tension bands and hose clamps

Tension band „Series 1201.F“

Combination-example: with spring

- latch 1009.04
- strike C-1322-00 with spring
- band 10x0,4mm



Order example:
Art.no 12 10 F . 361 .04/30

- 12 — tension band series
- 10 — bandwidth
- F — with spring
- 361 — bandscope
- .04/30 — zinc plated/st. steel (closure)

Article no.					Dimensions in mm	
Series	B Bandwidth	U Scope in mm	Material		Ø D	S Thickness
			Zinc plated	Raw		
			Steel	Stainless steel		
12	08F.	from 315-untill ∞	.04	.30	from Ø100-∞	0,4/1,0
12	10F.	from 315-untill ∞	.04	.30	from Ø100-∞	0,4/1,0

Standard dimensions in accordance with DN (Diameter Nominal)

Article no.					Dimensions in mm		
Series	B Bandwidth	DN	Material		Ø D	U Scope	S Thickness
			Zinc plated	Raw			
			Steel	Stainless steel			
1210F. DN 100			.04	.30	Ø 114,3	359	0,4/1,0
1210F. DN 125			.04	.30	Ø 139,7	439	0,4/1,0
1210F. DN 150			.04	.30	Ø 168,3	529	0,4/1,0
1210F. DN 200			.04	.30	Ø 219,1	688	0,4/1,0
1210F. DN 250			.04	.30	Ø 273,0	858	0,4/1,0
1210F. DN 300			.04	.30	Ø 323,9	1018	0,4/1,0

Further combinations are possible

Tension bands and hose clamps

Tension band with latch „Series 1201“

Combination-example: without spring

- latch 1009.30/6
- strike C-1322-202NB.30
- band 15x1,0mm

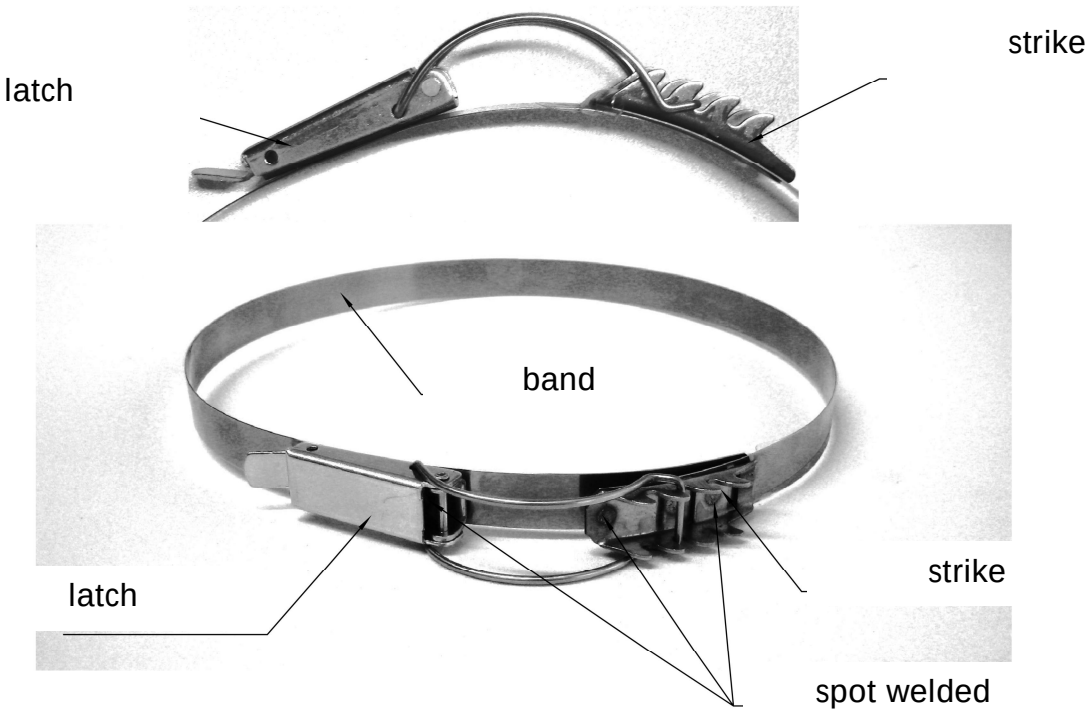

Standard dimensions in accordance with DN (Diameter Nominal)

Article no.					Dimensions in mm		
Series	B Bandwidth	DN	Material		Ø D	U Scope	S Thickness
			Zinc plated	Raw			
			Steel	Stainless steel			
1215. DN 100			.04	.30	Ø 114,3	359	0,4/1,0
1215. DN 125			.04	.30	Ø 139,7	439	0,4/1,0
1215. DN 150			.04	.30	Ø 168,3	529	0,4/1,0
1215. DN 200			.04	.30	Ø 219,1	688	0,4/1,0
1215. DN 250			.04	.30	Ø 273,0	858	0,4/1,0
1215. DN 300			.04	.30	Ø 323,9	1018	0,4/1,0

Further combinations are possible

TÜVRheinland ZERTIFIZIERT Management System ISO 9001:2015 ISO 14001:2015 www.tuv.com ID 9108624624

Further materials and surface finishes on demand. We will be pleased to give you advice!
Phone: +49 (0) 231 / 725 790 -0 eMail: info@hokon-verschlusstechnik.de
Fax: +49 (0) 231 / 725 790 -10 Homepage: www.hokon-verschlusstechnik.de

Tension bands and hose clamps

Tension band with latch „Series 1201“

Combination-example: without spring

- latch 1201.33/6
- strike C-1322-202NB.30
- band 15x1,0mm

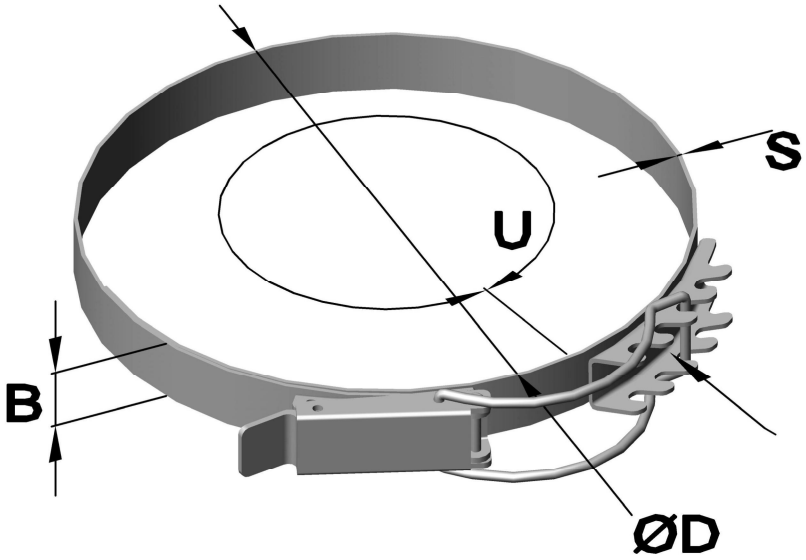

spot welded

Order example:
Art.no 12 15.361.04/30

- zinc plated/st. steel (closure)
- scope
- bandwidth
- tension band series

Article no.					Dimensions in mm	
Series	B Bandwidth	U Scope in mm	Material		Ø D	S Thickness
			Zinc plated Steel	Raw Stainless steel		
12	10.	from 315-untill ∞	.04	.30	ab Ø100-∞	0,4/1,0
12	15.	from 315-untill ∞	.04	.30	ab Ø100-∞	0,4/1,0
12	20.	from 315-untill ∞	.04	.30	ab Ø100-∞	0,4/1,0
12	25.	from 315-untill ∞	.04	.30	ab Ø100-∞	0,4/1,0
12	30.	from 315-untill ∞	.04	.30	ab Ø100-∞	0,4/1,0
12	35.	from 315-untill ∞	.04	.30	ab Ø100-∞	0,4/1,0

Further combinations are possible

Further materials and surface finishes on demand. We will be pleased to give you advice!
Phone: +49 (0) 231 / 725 790 -0 eMail: info@hokon-verschlusstechnik.de
Fax: +49 (0) 231 / 725 790 -10 Homepage: www.hokon-verschlusstechnik.de

Tension bands and hose clamps

Tension band with latch „Series 1301“

Combination-example:

- latch 3015.33RF-1/MOD
- strike 1301.GEGENHAKEN.33
- band 25x0,4mm
- triangel 120/4.33MOD

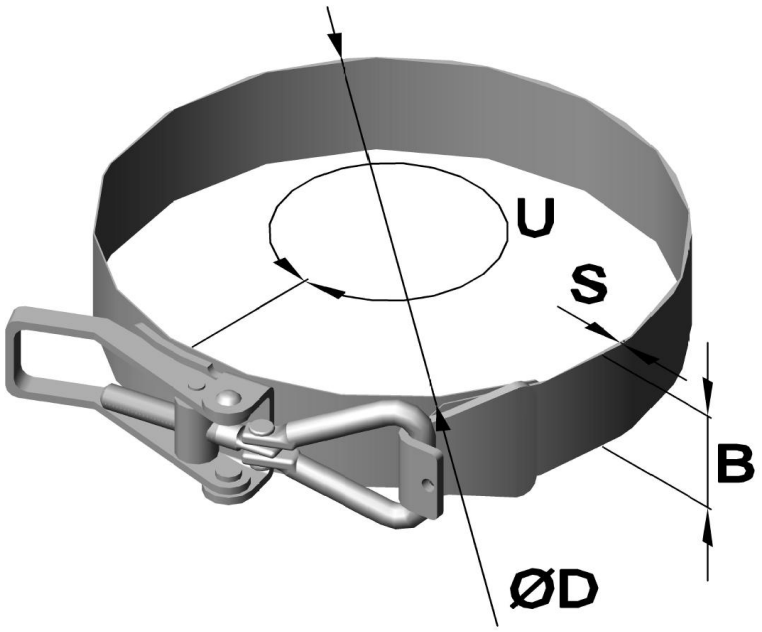

Standard dimensions in accordance with DN (Diameter Nominal)

Article no.				Dimensions in mm		
Series	B Bandwidth	DN	Material Raw Stainless steel	Ø D	U Scope	S Thickness
1325.	DN 100		.30	Ø 114,3	359	0,4
1325.	DN 125		.30	Ø 139,7	439	0,4
1325.	DN 150		.30	Ø 168,3	529	0,4
1325.	DN 200		.30	Ø 219,1	688	0,4
1325.	DN 250		.30	Ø 273,0	858	0,4
1325.	DN 300		.30	Ø 323,9	1018	0,4

TÜVRheinland ZERTIFIZIERT Management System ISO 9001:2015 ISO 14001:2015 www.tuv.com ID 9108624624

Further materials and surface finishes on demand. We will be pleased to give you advice!
Phone: +49 (0) 231 / 725 790 -0 eMail: info@hokon-verschlusstechnik.de
Fax: +49 (0) 231 / 725 790 -10 Homepage: www.hokon-verschlusstechnik.de

Tension bands and hose clamps

Further combinations are possible

Tension band with latch „Series 1301“

Combination-example:

- latch 3015.04
- strike 3608.04
- band 25x0,4mm



Order example:

Art.no 13 25.361.04/30

- 04/30 – zinc plated/st. steel (closure)
- 361 – scope
- 25 – bandwidth
- 13 – tension band series

Article no.					Dimensions in mm	
Series	B Bandwidth	U Scope in mm	Material: Zinc plated Steel	Material: Raw Stainless steel	Ø D	S Thickness
13	15.	from 315-untill ∞	.04	.30	from Ø100-∞	0,4/1,0
13	20.	from 315-untill ∞	.04	.30	from Ø100-∞	0,4/1,0
13	25.	from 315-untill ∞	.04	.30	from Ø100-∞	0,4/1,0
13	30.	from 315-untill ∞	.04	.30	from Ø100-∞	0,4/1,0
13	35.	from 315-untill ∞	.04	.30	from Ø100-∞	0,4/1,0
13	40.	from 315-untill ∞	.04	.30	from Ø100-∞	0,4/1,0
13	50.	from 315-untill ∞	.04	.30	from Ø100-∞	0,4/1,0

Tension bands and hose clamps

Further combinations are possible

Tension band with latch „Series 1401“ with plastic coating

Combination-example:

- latch 3015.33RF-1/MOD
- strike 1301.GEG.33
- band 25x0,4mm
- triangel 120/4.33MOD

with plastic coating

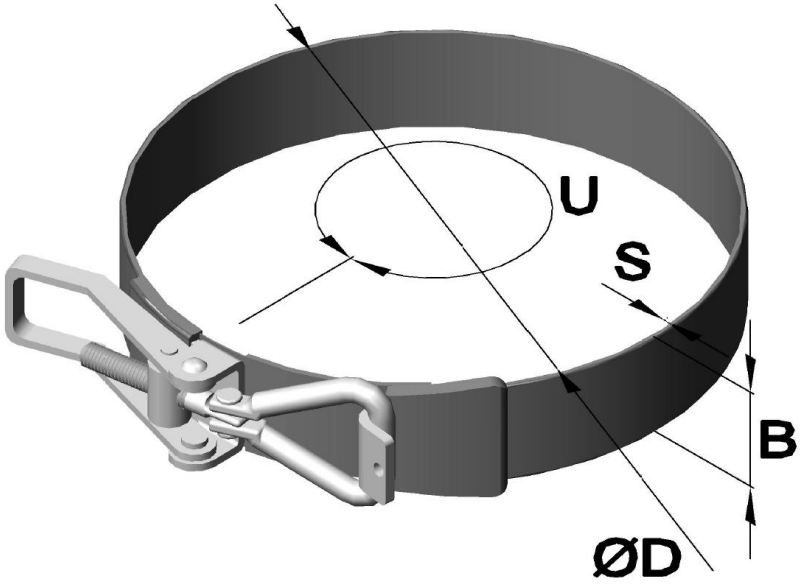

Standard dimensions in accordance with DN (Diameter Nominal)

Article no.				Dimensions in mm		
Series	B Bandwidth	DN	Material Raw Stainless steel	Ø D	U	S Thickness
1425.		DN 100	.30	Ø 114,3	359	0,4
1425.		DN 125	.30	Ø 139,7	439	0,4
1425.		DN 150	.30	Ø 168,3	529	0,4
1425.		DN 200	.30	Ø 219,1	688	0,4
1425.		DN 250	.30	Ø 273,0	858	0,4
1425.		DN 300	.30	Ø 323,9	1018	0,4

TÜVRheinland ZERTIFIZIERT Management System ISO 9001:2015 ISO 14001:2015 www.tuv.com ID 9108624624

Further materials and surface finishes on demand. We will be pleased to give you advice!
Phone: +49 (0) 231 / 725 790 -0 eMail: info@hokon-verschlusstechnik.de
Fax: +49 (0) 231 / 725 790 -10 Homepage: www.hokon-verschlusstechnik.de

Tension bands and hose clamps

Further combinations are possible

Tension band with latch „Series 1401“ with plastic coating



Combination-example:

- latch 3015.04
- strike 3608.04
- band 25x0,4mm
- with plastic coating

Order example:
Art.no 14 25.361.04/30

- 14 – Tension band series
- 25 – bandwidth
- 361 – scope
- 04 – zinc plated/st. steel (closure)
- 30 – with plastic coating

Article no.					Dimensions in mm	
Series	B Bandwidth	U Scope in mm	Material		Ø D	S Thickness
			Zinc plated Steel	Raw Stainless steel		
14	15.	from 315-untill∞ (stepplesly)	.04	.30	from Ø100-∞	0,4/1,0
14	20.	from 315-untill∞ (stepplesly)	.04	.30	from Ø100-∞	0,4/1,0
14	25.	from 315-untill∞ (stepplesly)	.04	.30	from Ø100-∞	0,4/1,0
14	30.	from 315-untill∞ (stepplesly)	.04	.30	from Ø100-∞	0,4/1,0
14	35.	from 315-untill∞ (stepplesly)	.04	.30	from Ø100-∞	0,4/1,0
14	40.	from 315-untill∞ (stepplesly)	.04	.30	from Ø100-∞	0,4/1,0
14	50.	from 315-untill∞ (stepplesly)	.04	.03	from Ø100-∞	0,4/1,0

Phone: +49 (0) 231 / 725 790 -0 eMail: info@hokon-verschlusstechnik.de
Fax: +49 (0) 231 / 725 790 -10 Homepage: www.hokon-verschlusstechnik.de

Tension bands and hose clamps

Further combinations are possible

Hose clamps „Series 1501“ with console and C-rubber profile

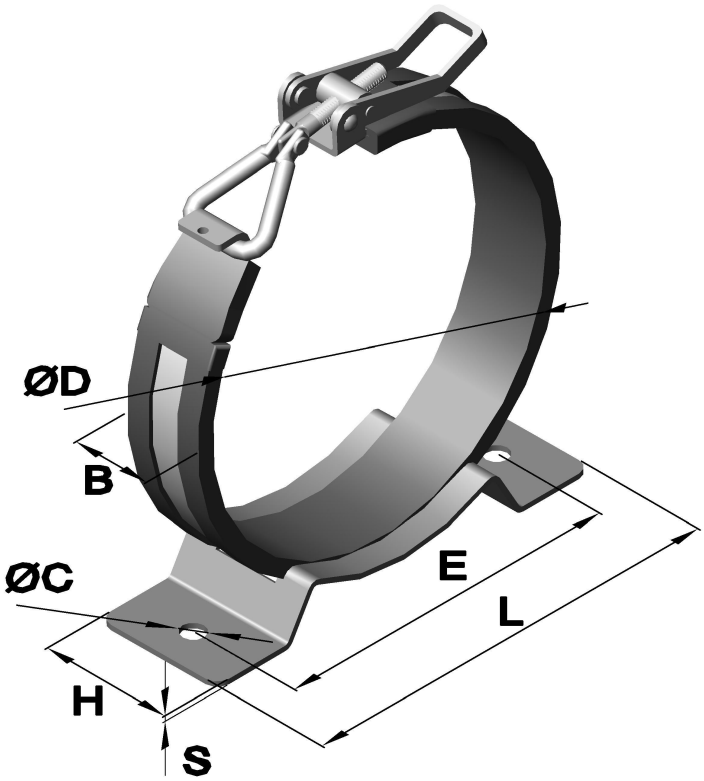

Standard dimensions in accordance with DN (Diameter Nominal)

Article no.				Dimensions in mm					
Series	B Bandwidth	DN	Material Raw Stainless steel	Ø D	H	E	L	ØC	Band
1525. DN 100			.30	Ø 114,3	50	130	160	9	25x0,4
1525. DN 125			.30	Ø 139,7	50	130	160	9	25x0,4
1525. DN 150			.30	Ø 168,3	50	170	200	9	25x0,4
1525. DN 200			.30	Ø 219,1	50	170	250	9	25x0,4
1525. DN 250			.30	Ø 273,0	50	220	250	9	25x0,4
1525. DN 300			.30	Ø 323,9	50	220	250	9	25x0,4

TÜVRheinland ZERTIFIZIERT Management System ISO 9001:2015 ISO 14001:2015 www.tuv.com ID 9108624624

Further materials and surface finishes on demand. We will be pleased to give you advice!
Phone: +49 (0) 231 / 725 790 -0 eMail: info@hokon-verschlusstechnik.de
Fax: +49 (0) 231 / 725 790 -10 Homepage: www.hokon-verschlusstechnik.de

Tension bands and hose clamps

Further combinations are possible

Hose clamps „Series 1501“ with console and C-rubber profile

Combination-example:

- latch V951L50-3BP
- strike V951L04x2BP
- band 25x0,4mm
- with C-rubber profile
- with console K130

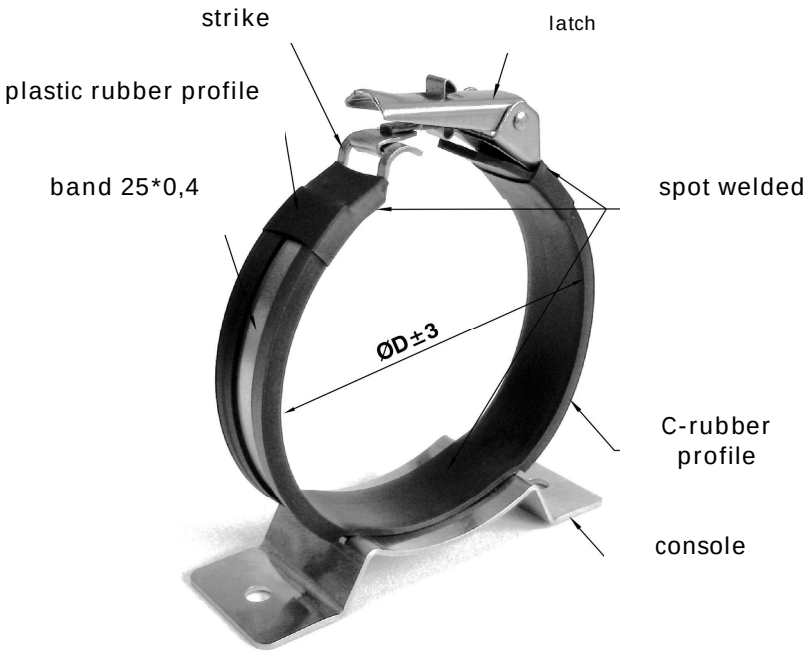

Order example:

Art.no 15 25.100.04/30 /K130

- 15 – tension band series
- 25 – bandwidth
- 100 – scope
- 04 – zinc plated/st. steel (closure)
- 30 – console (hole spacing E)

Article no.						Dimensions in mm					
Series	B Bandwidth	Ø D	Material			Ø C	E	H	L	S	Band
			Zinc plated	Stainless steel	Console						
15	15.	from Ø60-untill Ø120(stepplesly)	.04	.30	/K46	5	46	25	56	1,5	15x0,4
15	15.	from Ø100-untill ∞ (stepplesly)	.04	.30	/K130	9	130	50	160	2	15x0,4
15	25.	from Ø100-untill ∞ (stepplesly)	.04	.30	/K130	9	130	50	160	2	25x0,4
15	15.	from Ø150-untill ∞ (stepplesly)	.04	.30	/K170	9	170	50	200	2	15x0,4
15	25.	from Ø150-untill ∞ (stepplesly)	.04	.30	/K170	9	170	50	200	2	25x0,4
15	15.	from Ø200-untill ∞ (stepplesly)	.04	.30	/K220	9	220	50	250	2	15x0,4
15	25.	from Ø200-untill ∞ (stepplesly)	.04	.30	/K220	9	220	50	250	2	25x0,4

Phone: +49 (0) 231 / 725 790 -0 eMail: info@hokon-verschlusstechnik.de
Fax: +49 (0) 231 / 725 790 -10 Homepage: www.hokon-verschlusstechnik.de

Tension bands and hose clamps

Further combinations are possible

Hose clamps „Series 1601“ with console

Combination-example:

- latch 3015.33RF-1/MOD
- strike 1301.GEGENHAKEN.33
- band 25x0,4mm
- tension band with console
- triangle 120/4.33MOD

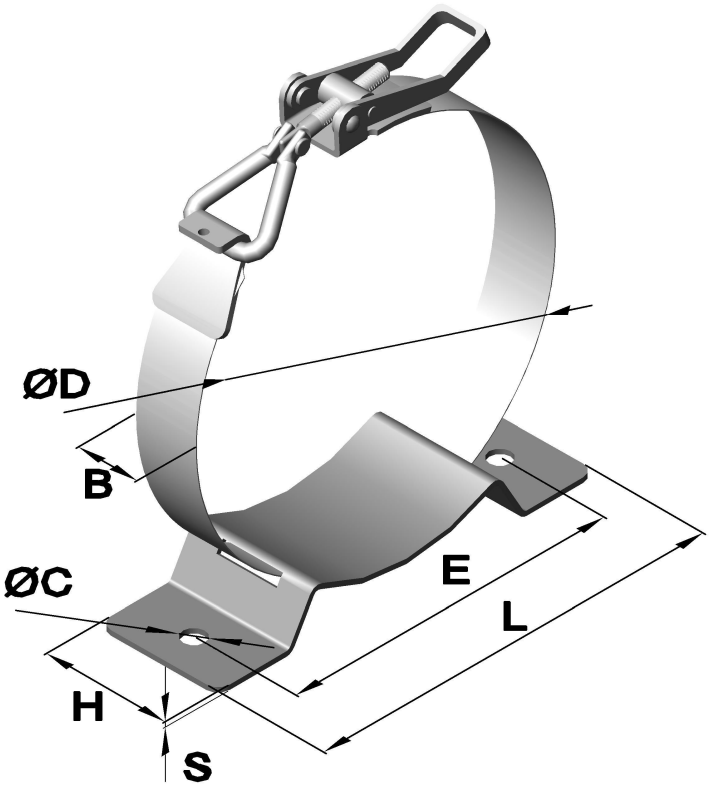

Standard dimensions in accordance with DN (Diameter Nominal)

Article no.					Dimensions in mm							
Series	B Bandwidth	DN	Material Raw Stainless steel	Console	Ø D	U	E	H	L	Ø C	S	Band
1625.		DN 100.	.30	K130	Ø 114,3	359	130	50	160	9	2	25x0,4
1625.		DN 125.	.30	K130	Ø 139,7	439	130	50	160	9	2	25x0,4
1625.		DN 150.	.30	K130	Ø 168,3	529	130	50	160	9	2	25x0,4
1625.		DN 200.	.30	K170	Ø 219,1	688	170	50	200	9	2	25x0,4
1625.		DN 250.	.30	K170	Ø 273,0	858	170	50	200	9	2	25x0,4
1625.		DN 300.	.30	K170	Ø 323,9	1018	170	50	200	9	2	25x0,4

Management System ISO 9001:2015 ISO 14001:2015 TÜVRheinland ZERTIFIZIERT www.tuv.com ID 9108624624

Further materials and surface finishes on demand. We will be pleased to give you advice!
Phone: +49 (0) 231 / 725 790 -0 eMail: info@hokon-verschlusstechnik.de
Fax: +49 (0) 231 / 725 790 -10 Homepage: www.hokon-verschlusstechnik.de

Tension bands and hose clamps

Further combinations are possible

Hose clamps „Series 1601“ with console



Combination-example:

- latch 3015.04
- strike 3608.04
- band 25x0,4mm
- tension band with console K130

Order example:
Art.no 16 25.100.04/30 /K130

- console (hole space E)
- zinc plated/st. steel (closure)
- scope
- bandwidth
- Tension band series

Article no.						Dimensions in mm					
Series	B Bandwidth	Ø D	Material			Ø C	E	H	L	S	Band
			Zinc plated	Stainless steel	Console						
16	15.	from Ø60-untill Ø120 (stepplesly)	.04	.30	/K46	5	46	25	56	1,5	15x0,4
16	15.	from Ø100-untill ∞ (stepplesly)	.04	.30	/K130	9	130	50	160	2	15x0,4
16	20.	from Ø100-untill ∞ (stepplesly)	.04	.30	/K130	9	130	50	160	2	20x0,4
16	25.	from Ø100-untill ∞ (stepplesly)	.04	.30	/K130	9	130	50	160	2	25x0,4
16	15.	from Ø150-untill ∞ (stepplesly)	.04	.30	/K170	9	170	50	200	2	15x0,4
16	20.	from Ø150-untill ∞ (stepplesly)	.04	.30	/K170	9	170	50	200	2	20x0,4
16	25.	from Ø150-untill ∞ (stepplesly)	.04	.30	/K170	9	170	50	200	2	25x0,4
16	15.	from Ø200-untill ∞ (stepplesly)	.04	.30	/K220	9	220	50	250	2	15x0,4
16	20.	from Ø200-untill ∞ (stepplesly)	.04	.30	/K220	9	220	50	250	2	20x0,4
16	25.	from Ø200-untill ∞ (stepplesly)	.04	.30	/K220	9	220	50	250	2	25x0,4

Tension bands and hose clamps

Further combinations are possible

Hinge bolt tension band „Series 1701“

Combination-example:

- band 30x0,4mm
- bolt Ø20x30mm
- threaded rod M8x120mm

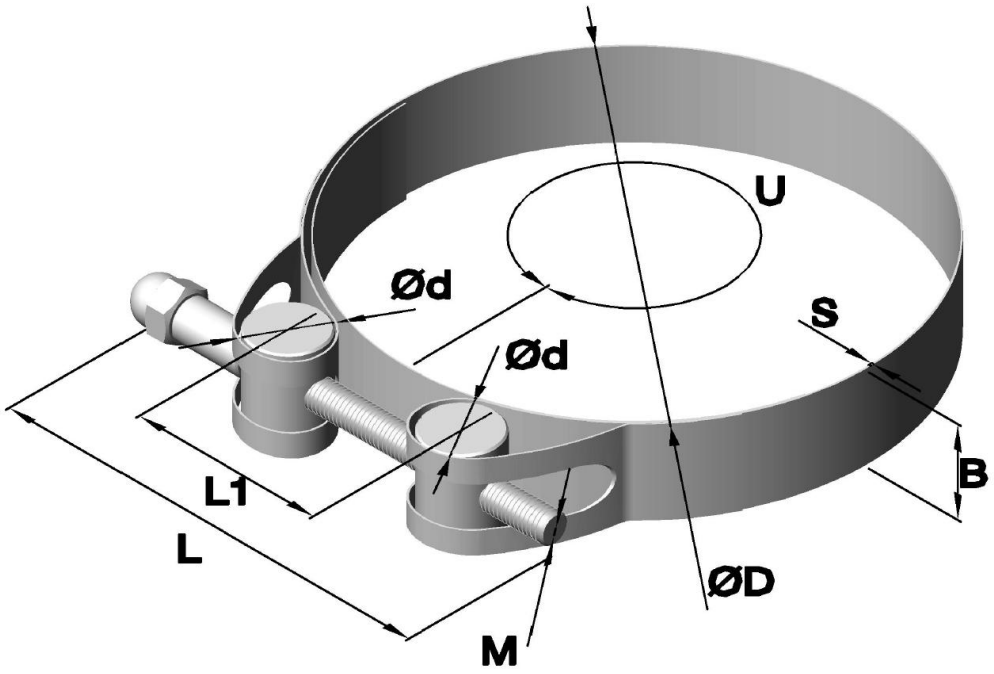

Standard dimensions in accordance with DN (Diameter Nominal)

Article no.				Dimensions in mm						
Series	B Bandwidth	DN	Material Raw / Stainless steel	Ø D	U	d	L	L1	M	S Thickness
1730.	DN 100.	30		Ø 114,3	359	20	120	50	M8	0,4
1730.	DN 125.	30		Ø 139,7	439	20	120	50	M8	0,4
1730.	DN 150.	30		Ø 168,3	529	20	120	50	M8	0,4
1730.	DN 200.	30		Ø 219,1	688	20	120	50	M8	0,4
1730.	DN 250.	30		Ø 273,0	858	20	120	50	M8	0,4
1730.	DN 300.	30		Ø 323,9	1018	20	120	50	M8	0,4

TÜVRheinland ZERTIFIZIERT Management System ISO 9001:2015 ISO 14001:2015 www.tuv.com ID 9108624624

Further materials and surface finishes on demand. We will be pleased to give you advice!
Phone: +49 (0) 231 / 725 790 -0 eMail: info@hokon-verschlusstechnik.de
Fax: +49 (0) 231 / 725 790 -10 Homepage: www.hokon-verschlusstechnik.de

Tension bands and hose clamps

Further combinations are possible

Hinge bolt tension band „Series 1701“

Combination-example:

- band 25x0,4mm
- bolt Ø20x25mm
- threaded rod M8x120mm



Order example:
Art.no 17 30.315.30

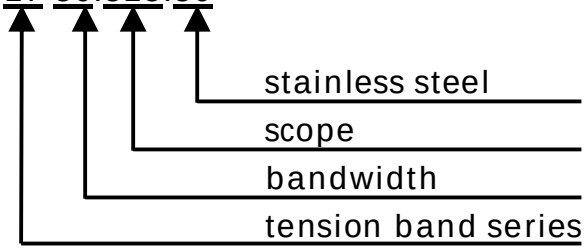

Article no.				Dimensions in mm					
Series	B Band-width	U Scope in mm	Material Raw Stainless steel	Ø D	d	L	L1	M	S Thickness
17	20.	from 315-untill ∞(stepplesly)	.30	from Ø100- ∞	20	100-160	30-50	M8/M10	0,4/1,0
17	25.	from 315-untill ∞ (stepplesly)	.30	from Ø100- ∞	20	120-160	30-50	M8/M10	0,4/1,0
17	30.	from 315-untill ∞ (stepplesly)	.30	from Ø100- ∞	20	160	30-50	M8/M10	0,4/1,0
17	35.	from 315-untill ∞ (stepplesly)	.30	from Ø100- ∞	20	160	30-50	M8/M10	0,4/1,0
17	40.	from 315-untill ∞ (stepplesly)	.30	from Ø100- ∞	20	160	30-50	M8/M10	0,4/1,0
17	50.	from 315-untill ∞ (stepplesly)	.30	from Ø100- ∞	20	160	30-50	M8/M10	0,4/1,0

Tension bands and hose clamps

Further combinations are possible

Hinge bolt tension band „Series 1801“ with plastic rubber profile

Combination-example:

- band 30x0,4mm with rubber profile
- bolt Ø20x30mm 1730.QB.30/M8
- threaded rod M8x120mm

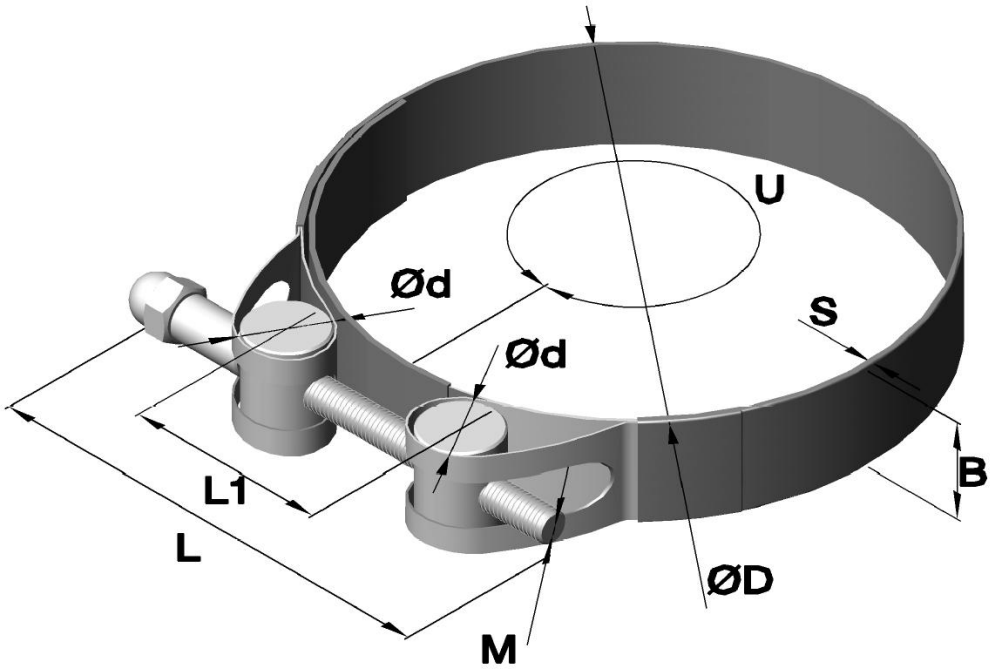

Standard dimensions in accordance with DN (Diameter Nominal)

Article no.				Dimensions in mm						
Series	B Bandwidth	DN	Material Raw / Stainless steel	Ø D	U	d	L	L1	M	S Thickness
1830.	DN 100.	30		Ø 114,3	359	20	120	50	M8	0,4
1830.	DN 125.	30		Ø 139,7	439	20	120	50	M8	0,4
1830.	DN 150.	30		Ø 168,3	529	20	120	50	M8	0,4
1830.	DN 200.	30		Ø 219,1	688	20	120	50	M8	0,4
1830.	DN 250.	30		Ø 273,0	858	20	120	50	M8	0,4
1830.	DN 300.	30		Ø 323,9	1018	20	120	50	M8	0,4

Further combinations are possible

TÜVRheinland ZERTIFIZIERT Management System ISO 9001:2015 ISO 14001:2015 www.tuv.com ID 9108624624

Further materials and surface finishes on demand. We will be pleased to give you advice!
Phone: +49 (0) 231 / 725 790 -0 eMail: info@hokon-verschlusstechnik.de
Fax: +49 (0) 231 / 725 790 -10 Homepage: www.hokon-verschlusstechnik.de

Tension bands and hose clamps

Hinge bolt tension band „Series 1801“ with rubber profile



Order example:
Art.no. 18 30.361.30

- 18 — tension band series
- 30 — bandwidth
- 361 — scope
- 30 — stainless steel

Article no.				Dimensions in mm					
Series	B Band-width	U Scope in mm	Material Raw Stainless steel	Ø D	d	L	L1	M	S Thickness
18	20.	from 315-untill ∞ (stepplesly)	.30	from Ø100- ∞	20	100-160	30-50	M8/M10	0,4/1,0
18	25.	from 315-untill ∞ (stepplesly)	.30	from Ø100- ∞	20	120-160	30-50	M8/M10	0,4/1,0
18	30.	from 315-untill ∞ (stepplesly)	.30	from Ø100- ∞	20	160	30-50	M8/M10	0,4/1,0
18	35.	from 315-untill ∞ (stepplesly)	.30	from Ø100- ∞	20	160	30-50	M8/M10	0,4/1,0
18	40.	from 315-untill ∞ (stepplesly)	.30	from Ø100- ∞	20	160	30-50	M8/M10	0,4/1,0
18	50.	from 315-untill ∞ (stepplesly)	.30	from Ø100- ∞	20	160	30-50	M8/M10	0,4/1,0

Tension bands and hose clamps

Hinge bolt tension band „Series 1901“ type1 with console

Combination-example:

- band 25x0,4mm
- bolt Ø20x25mm
- threaded rod M8x120mm

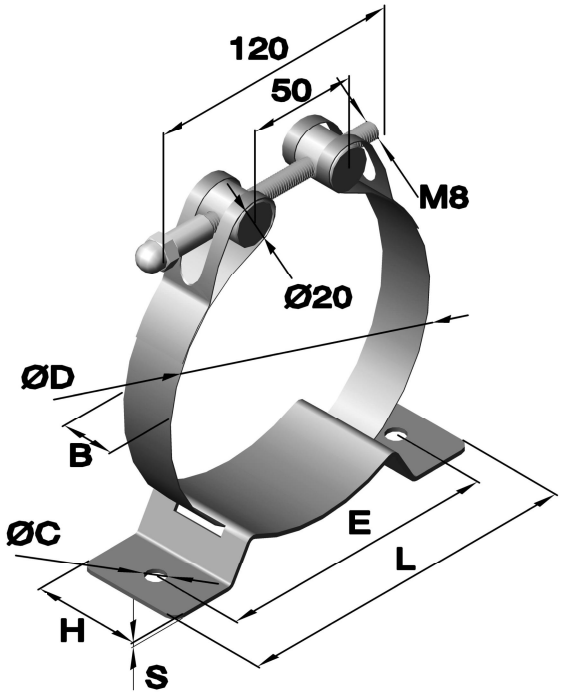

Order example:
Art.no 19 25 100.30 / K130

- 19 – tension band series
- 25 – bandwidth
- 100 – scope
- 30 – stainless steel
- K130 – console (hole space “E”)

Article no.					Dimensions in mm					
Series	B Bandwidth	Ø D	Material Stainless steel	Material Console/ Type	Ø C	E	H	L	S	Band
19	20.	from Ø100-untill ∞ (stepplesly)	.30	/K130/1	9	130	50	160	2	20x0,4
19	25.	from Ø100-untill ∞ (stepplesly)	.30	/K130/1	9	130	50	160	2	25x0,4
19	20.	from Ø150-untill ∞ (stepplesly)	.30	/K170/1	9	170	50	200	2	20x0,4
19	25.	from Ø150-untill ∞ (stepplesly)	.30	/K170/1	9	170	50	200	2	25x0,4
19	20.	from Ø200-untill ∞ (stepplesly)	.30	/K220/1	9	220	50	250	2	20x0,4
19	25.	from Ø200-untill ∞ (stepplesly)	.30	/K220/1	9	220	50	250	2	25x0,4

Standard dimensions in accordance with DN (Diameter Nominal)

Article no.				Dimensions in mm							
Series	B Bandwidth	DN	Material Raw / Stainless steel	Ø D	U	E Console	d	L	L1	M	Band
1925.	DN 100.	30/01		Ø 114,3	359	130	20	120	50	M8	25x0,4
1925.	DN 125.	30/01		Ø 139,7	439	130	20	120	50	M8	25x0,4
1925.	DN 150.	30/01		Ø 168,3	529	170	20	120	50	M8	25x0,4
1925.	DN 200.	30/01		Ø 219,1	688	170	20	120	50	M8	25x0,4
1925.	DN 250.	30/01		Ø 273,0	858	220	20	120	50	M8	25x0,4
1925.	DN 300.	30/01		Ø 323,9	1018	220	20	120	50	M8	25x0,4

Further combinations are possible

TÜVRheinland ZERTIFIZIERT Management System ISO 9001:2015 ISO 14001:2015 www.tuv.com ID 9108624624

Further materials and surface finishes on demand. We will be pleased to give you advice!
Phone: +49 (0) 231 / 725 790 -0 eMail: info@hokon-verschlusstechnik.de
Fax: +49 (0) 231 / 725 790 -10 Homepage: www.hokon-verschlusstechnik.de

Tension bands and hose clamps

Hinge bolt tension band „Series 1901“ type 2
with console and C-rubber profile

Combination-example:

- band 25x0,4mm
- bolt Ø20x25mm 1725.QB.30/M8
- threaded rod M8x120mm

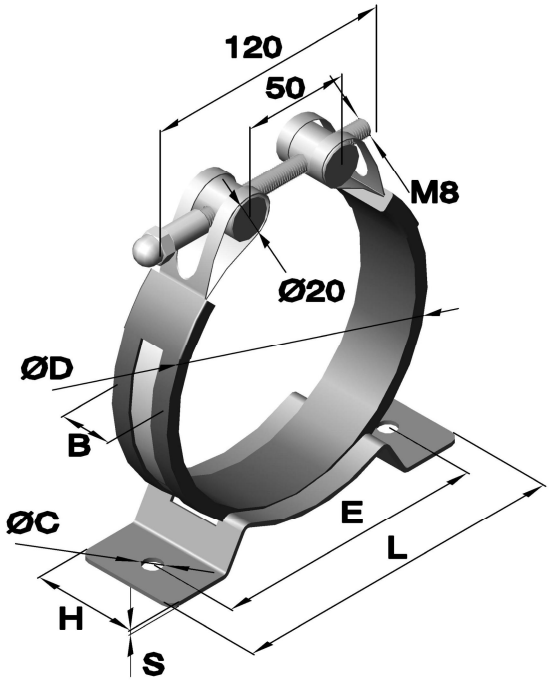

Order example:
Art.no 19 25 100.30 / K130 / 2

- 19 – Tension band series
- 25 – bandwidth
- 100 – scope
- 30 – stainless steel
- K130 – console (hole space “E”)

Article no.					Dimensions in mm					
Series	B Bandwidth	Ø D	Material		Ø C	E	H	L	S	Band
			Stainless steel	Console/Type						
19	25.	from Ø100-untill ∞ (stepplesly)	.30	/K130/2	9	130	50	160	2	25x0,4
19	25.	from Ø150-untill ∞ (stepplesly)	.30	/K170/2	9	170	50	200	2	25x0,4
19	25.	from Ø200-untill ∞ (stepplesly)	.30	/K220/2	9	220	50	250	2	25x0,4

Standard dimensions in accordance with DN (Diameter Nominal)

Article no.				Dimensions in mm							
Series	B Bandwidth	DN	Material Raw / Stainless steel	Ø D	U	E Console	d	L	L1	M	Band
1925.	DN 100.	30/02		Ø 114,3	359	130	20	120	50	M8	25x0,4
1925.	DN 125.	30/02		Ø 139,7	439	130	20	120	50	M8	25x0,4
1925.	DN 150.	30/02		Ø 168,3	529	170	20	120	50	M8	25x0,4
1925.	DN 200.	30/02		Ø 219,1	688	170	20	120	50	M8	25x0,4
1925.	DN 250.	30/02		Ø 273,0	858	220	20	120	50	M8	25x0,4
1925.	DN 300.	30/02		Ø 323,9	1018	220	20	120	50	M8	25x0,4

Further combinations are possible

Tension bands and hose clamps

Tension band „Special construction“

Tension band „Series 1301“









TÜVRheinland ZERTIFIZIERT Management System ISO 9001:2015 ISO 14001:2015 www.tuv.com ID 9108624624

Further materials and surface finishes on demand. We will be pleased to give you advice!
Phone: +49 (0) 231 / 725 790 -0 eMail: info@hokon-verschlusstechnik.de
Fax: +49 (0) 231 / 725 790 -10 Homepage: www.hokon-verschlusstechnik.de

Tension bands and hose clamps

Tension band „Series 1201“ with spring
with offset for spiral hose



Tension band „Series 1201“
without spring





Hose clamps „Series 1501“
with console and C-rubber profile e.g. for hose clamps according to customer requirements







Further combinations are possible

Tension bands and hose clamps



Webbings

Webbing cross
with clasp

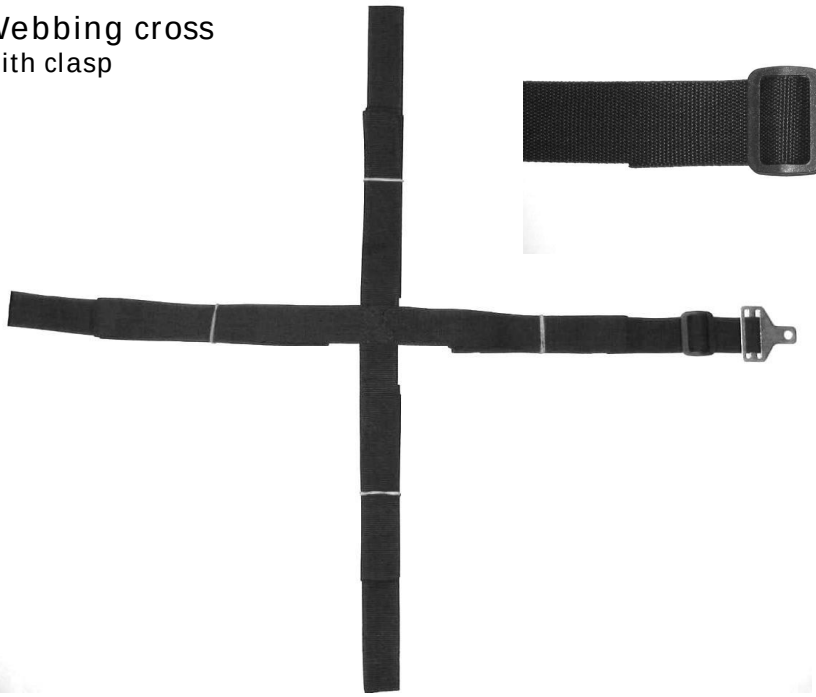



Webbing
with latch with R-Pin



Webbing
with clasp



Further combinations are possible

TÜVRheinland ZERTIFIZIERT Management System ISO 9001:2015 ISO 14001:2015 www.tuv.com ID 9108624624

Further materials and surface finishes on demand. We will be pleased to give you advice!
Phone: +49 (0) 231 / 725 790 -0 eMail: info@hokon-verschlusstechnik.de
Fax: +49 (0) 231 / 725 790 -10 Homepage: www.hokon-verschlusstechnik.de

„BAND-IT“

Tension bands and Cable ties



„BAND-IT“
Tension bands and Cable ties

Tension band „Series 1101“
„BAND-FAST“ pre-cut and assembled
with „VALU-CLIP“

Material and surface finish:
Raw, stainless steel (V2A)



Article no.			Dimensions in mm					Package quantity
Series	Execution	Material Stainless steel V2A	Width	Thickness	Length	Maximum Diameter Single Wrap	Maximum Diameter Double Wrap	
1101	.L 20499	.30	6.4	0.51	400	88	38	100/St.
1101	.L 20799	.30	6.4	0.51	480	127	63	100/St.
1101	.L 20899	.30	6.4	0.51	680	177	88	100/St.
1101	.L 21099	.30	6.4	0.51	860	228	114	100/St.
1101	.L 22199	.30	9.6	0.64	400	88	38	100/St.
1101	.L 22999	.30	9.6	0.64	1120	305	152	25/St.
1101	.L 24299	.30	12.7	0.76	450	102	50	100/St.
1101	.L 24699	.30	12.7	0.76	780	203	101	25/St.
1101	.L 26399	.30	15.9	0.76	530	127	63	100/St.
1101	.L 27199	.30	15.9	0.76	1420	406	203	25/St.
1101	.L 27399	.30	15.9	0.76	1930	508	175	25/St.
1101	.L 28499	.30	19.1	0.76	600	152	76	50/St.
1101	.L 28899	.30	19.1	0.76	930	254	127	25/St.
1101	.L 29099	.30	19.1	0.76	1270	355	177	25/St.
1101	.L 29299	.30	19.1	0.76	1570	457	228	25/St.

By greater dimensions we recommend our endless belt with loose catches.

Situation as of delivery	Single Wrap for lubricated surfaces	Double Wrap for non-lubricated surfaces
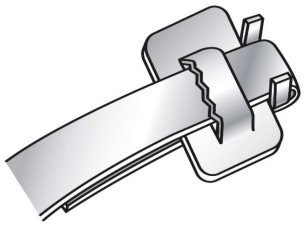	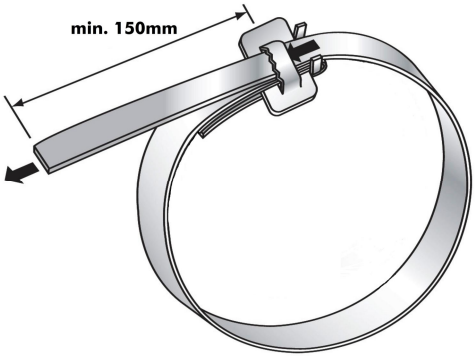	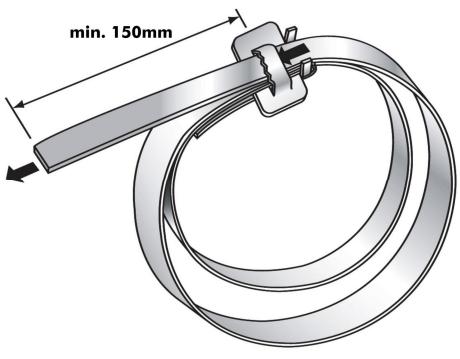

TÜVRheinland ZERTIFIZIERT
Management System
ISO 9001:2015
ISO 14001:2015
www.tuv.com ID 9108624624

Further materials and surface finishes on demand. We will be pleased to give you advice.
Phone: +49 (0) 231 / 725 790 -0 eMail: info@hokon-verschlusstechnik.de
Fax: +49 (0) 231 / 725 790 -10 Homepage: www.hokon-verschlusstechnik.de

„BAND-IT“
Spannbänder und Kabelbinder

Clamping tools for „Series 1101“		
Art. no.: C 00189	Art. no.: C 00369	Art. no.: C 07569 „Bantam“
		
Art. no.: C 40099 „ratchet“	Art. no.: C 08599 „Bantam-ratchet“	Art. no.: J 02069 max. width up to 9.6 mm
		

How to use it Art. no.: C 07569 „Bantam“		
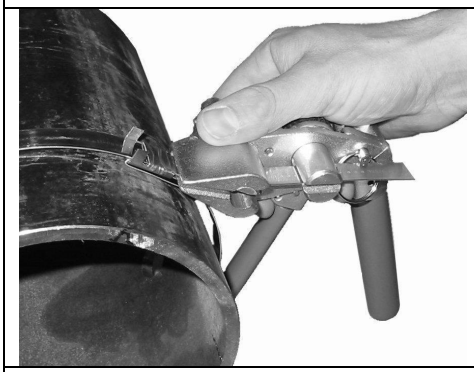	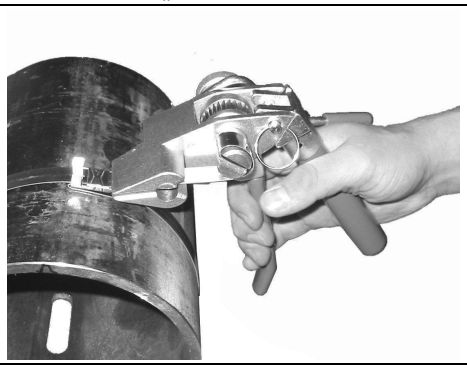	
1. Pull the band through the catch 2. Insert in the tool	3. Tense it with the ratchet	4. Nod it in the opposite direction 5. Cut off 6. Clamp

„BAND-IT“
Tension bands and Cable ties

Endless belt „Series 1101“
„VALUSTRAP“ for loose „VALU-CLIPS“



Material and surface finish:
Raw stainless steel (V2A)

Article no.		Dimensions in mm			Package quantity in m/roll
Series	Execution	Material Raw V2A	Width	Thickness	
1101	.C 13199	.30	4.8	0.38	30.5 m
1101	.C 13399	.30	9.6	0.38	30.5 m
1101	.C 13499	.30	12.7	0.38	30.5 m
1101	.C 13599	.30	15.9	0.38	30.5 m
1101	.C 13699	.30	19.1	0.38	30.5 m
1101	.C 19199	.30	9.6	0.51	30.5 m
1101	.C 18189	.30	12.7	0.51	30.5 m
1101	.C 17199	.30	15.9	0.51	30.5 m
1101	.C 16189	.30	19.1	0.51	30.5 m
1101	.C 19399	.30	9.6	0.51	61 m
1101	.C 18389	.30	12.7	0.51	61 m
1101	.C 17399	.30	15.9	0.51	61 m
1101	.C 16389	.30	19.1	0.51	61 m
1101	.C 14499	.30	12.7	0.64	30.5 m
1101	.C 14599	.30	15.9	0.64	30.5 m
1101	.C 14699	.30	19.1	0.64	30.5 m
1101	.C 14899	.30	12.7	0.64	61 m
1101	.C 14999	.30	15.9	0.64	61 m
1101	.C 15099	.30	19.1	0.64	61 m
1101	.C 92399	.30	9.6	0.63	30.5 m
1101	.C 92499	.30	12.7	0.76	30.5 m
1101	.C 92599	.30	15.9	0.76	30.5 m
1101	.C 92699	.30	19.1	0.76	30.5 m



Loose Lock-Clips „Series 1101“
„VALU-CLIPS“ for endless belts

Material and surface finish:
Raw stainless steel (1.4301)

Article no.			Dimensions in mm		Package quantity
Series	Execution	Material Raw V2A	Width	Thickness	
1101	.C 15199	.30	4.8	0.8	100/St.
1101	.C 15399	.30	9.6	0.8	100/St.
1101	.C 15499	.30	12.7	0.8	100/St.
1101	.C 15599	.30	15.9	0.8	100/St.
1101	.C 15699	.30	19.1	0.8	100/St.
1101	.C 25299	.30	6.4	1.0	100/St.
1101	.L 15399	.30	9.6	1.0	100/St.
1101	.L 15499	.30	12.7	1.0	100/St.
1101	.L 15599	.30	15.9	1.0	100/St.
1101	.L 15699	.30	19.1	1.0	100/St.



TÜVRheinland ZERTIFIZIERT
Management System
ISO 9001:2015
ISO 14001:2015
www.tuv.com ID 9108624624

Further materials and surface finishes on demand. We will be pleased to give you advice.
Phone: +49 (0) 231 / 725 790 -0 eMail: info@hokon-verschlusstechnik.de
Fax: +49 (0) 231 / 725 790 -10 Homepage: www.hokon-verschlusstechnik.de

„BAND-IT“
Spannbänder und Kabelbinder



Endless belt „Series 1101“
„VALUSTRAP“ for loose „VALU-CLIPS“

Material and surface finish:
Raw stainless steel (V4A)

Article no.			Dimensions in mm		Package quantity in m/roll
Series	Execution	Material Raw V4A	Width	Thickness	
1101	.C 40299	.35	6,4	0,51	30,5m
1101	.C 40399	.35	9,6	0,64	30,5m
1101	.C 403 Y 9	.35	9,6	0,64	30,5m with yellow bracket
1101	.C 40499	.35	12,7	0,76	30,5m
1101	.C 404 B 9	.35	12,7	0,76	30,5m with blue bracket
1101	.C 40599	.35	15,9	0,76	30,5m
1101	.C 405 G 9	.35	15,9	0,76	30,5m with green bracket
1101	.C 40699	.35	19,1	0,76	30,5m
1101	.C 406 R 9	.35	19,1	0,76	30,5m with red bracket
1101	.C 44499	.35	12,7	0,38	61m
1101	.C 444 B 9	.35	12,7	0,38	61m with blue bracket
1101	.C 44599	.35	15,9	0,38	61m
1101	.C 445 G 9	.35	15,9	0,38	61m with green bracket
1101	.C 44699	.35	19,1	0,38	61m
1101	.C 446 R 9	.35	19,1	0,38	61m with red bracket





Loose Lock-Clips „Series 1101“
„VALU-CLIPS“ for endless belts

Material and surface finish:
Raw stainless steel (V4A)

Article no.			Dimensions in mm		Package quantity
Series	Execution	Material raw V4A	Width	Thickness	
1101	.AE4529	.35	6,4	1,0	100/St.
1101	.AE4539	.35	9,6	1,0	100/St.
1101	.AE4549	.35	12,7	1,0	100/St.
1101	.AE4559	.35	15,9	1,0	100/St.
1101	.AE4569	.35	19,1	1,0	100/St.



„BAND-IT“
Tension bands and Cable ties

Push the band through the catch	Bend it down	Push the band through the catch Single wrap
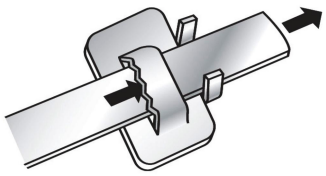	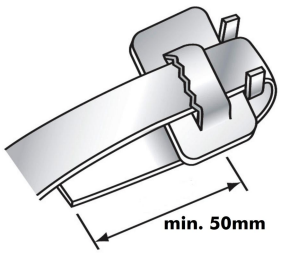	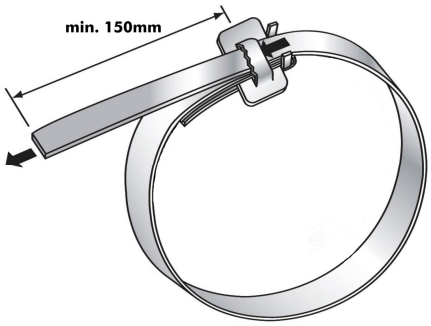

Clamping tools for „Series 1101“		
Art. no.: C 00189	Art. no.: C 00369	Art. no.: C 07569 „Bantam“
		
Art. no.: C 40099 „Ratchet“	Art. no.: C 08599 „Bantam-Ratchet“	Art. no.: J 02069 max. width bis 9.6 mm
		

How to use it Art. no.: C 07569 „Bantam“		
	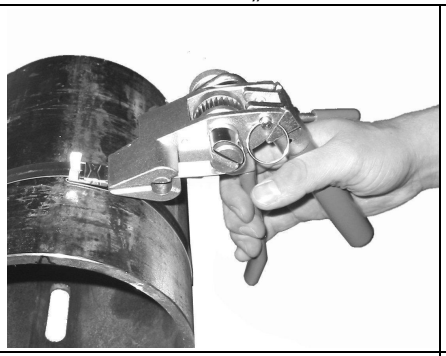	
1. Pull the band through the catch 2. Insert in the tool	3. Tense it with the ratchet	4. Nod it in the opposite direction 5. Cut it off 6. Clamp it

TÜVRheinland ZERTIFIZIERT
Management System
ISO 9001:2015
ISO 14001:2015
www.tuv.com ID 9108624624

Further materials and surface finishes on demand. We will be pleased to give you advice.
Phone: +49 (0) 231 / 725 790 -0 eMail: info@hokon-verschlusstechnik.de
Fax: +49 (0) 231 / 725 790 -10 Homepage: www.hokon-verschlusstechnik.de

„BAND-IT“
Spannbänder und Kabelbinder

Tension band „Series 1102“
„BAND-FAST“ pre-cut with
assembled „EAR-LOK loop“

Material and surface finish:
Raw stainless steel (V2A)



Article no.			Dimensions in mm					Package quantity
Series	Execution	Material Raw V2A	Width	Thickness	Length	Maximum Diameter Single Wrap	Maximum Diameter Double Wrap	
1102	.A 0830-020	.30	12.7	0.76	510	102	51	25/St
1102	.A 0830-024	.30	12.7	0.76	610	127	64	25/St
1102	.A 0830-027	.30	12.7	0.76	690	152	76	25/St
1102	.A 0830-034	.30	12.7	0.76	860	203	102	25/St
1102	.A 0830-041	.30	12.7	0.76	1040	254	127	25/St
1102	.A 0830-048	.30	12.7	0.76	1220	305	152	25/St
1102	.A 0830-055	.30	12.7	0.76	1400	356	178	25/St
1102	.A 0830-069	.30	12.7	0.76	1750	457	229	25/St
1102	.A 0830-076	.30	12.7	0.76	1930	508	254	15/St
1102	.A 0830-090	.30	12.7	0.76	2290	610	305	15/St
1102	.A 1230-020	.30	19.1	0.76	510	102	51	25/St
1102	.A 1230-024	.30	19.1	0.76	610	127	64	25/St
1102	.A 1230-027	.30	19.1	0.76	690	152	76	25/St
1102	.A 1230-034	.30	19.1	0.76	860	203	102	25/St
1102	.A 1230-041	.30	19.1	0.76	1040	254	127	25/St
1102	.A 1230-048	.30	19.1	0.76	1220	305	152	25/St
1102	.A 1230-055	.30	19.1	0.76	1400	356	178	25/St
1102	.A 1230-069	.30	19.1	0.76	1750	457	229	25/St
1102	.A 1230-076	.30	19.1	0.76	1930	508	254	15/St
1102	.A 1230-090	.30	19.1	0.76	2290	610	305	15/St

By greater dimensions we recommend our endless belts with loose catches.

Situation as of delivery	Single Wrap for lubricated surfaces	Double Wrap for non-lubricated surfaces
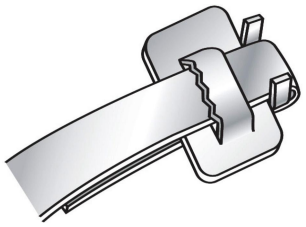	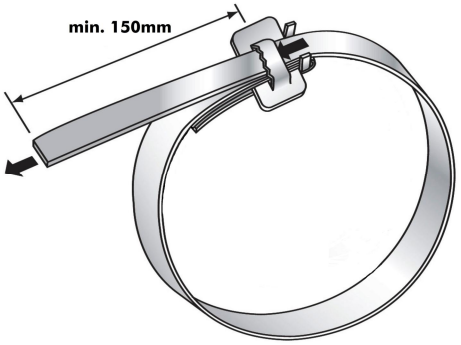	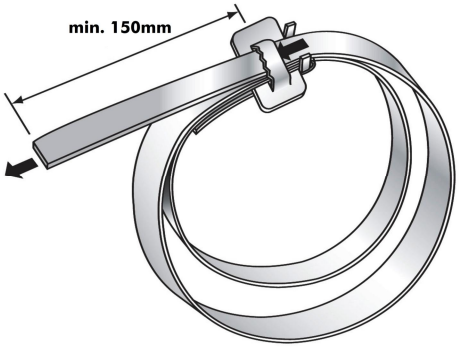

„BAND-IT“
Tension bands and Cable ties

Clamping tools for „Series 1102“	
Art. no.: C 00189	Art. no.: C 00369
	
Art. no.: C 40099	Art. no.: C 08599 „Bantam-Ratchet“
	

How to use it Art. no.: C 00189	
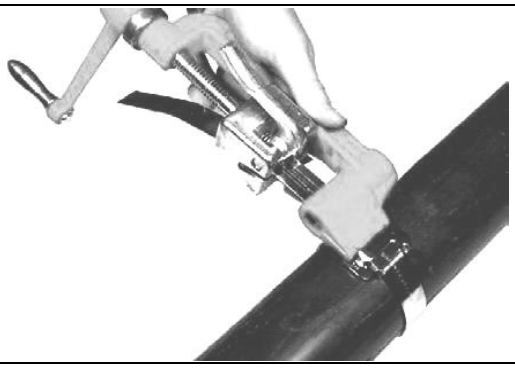	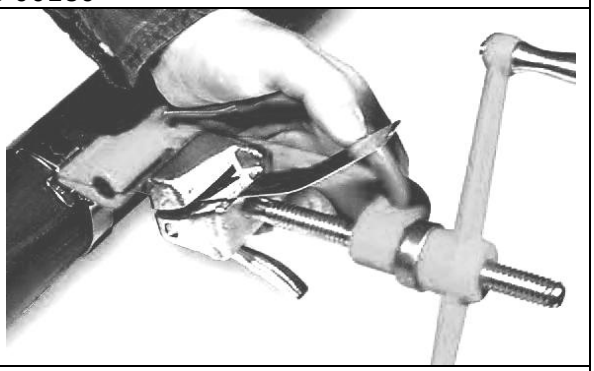
1. Pull the band through the catch 2. Insert in the tool	3. Tense it with the ratchet
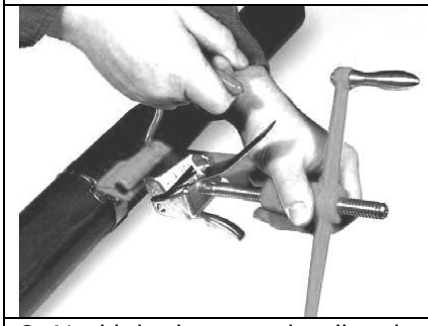	
3. Nod it in the opposite direction 4. Cut it off	5. Clamp it

Management System ISO 9001:2015 ISO 14001:2015 TÜVRheinland ZERTIFIZIERT www.tuv.com ID 9108624624

Further materials and surface finishes on demand. We will be pleased to give you advice.
Phone: +49 (0) 231 / 725 790 -0 eMail: info@hokon-verschlusstechnik.de
Fax: +49 (0) 231 / 725 790 -10 Homepage: www.hokon-verschlusstechnik.de

„BAND-IT“
Spannbänder und Kabelbinder



Endless belt „Series 1102“
„BAND-IT Band“ for loose „EAR-LOK loop“

Material and surface finish:
Raw stainless steel (V2A)

Article no.			Dimensions in mm		Package quantity in m/roll
Series	Execution	Material Raw V2A	Width	Thickness	
1102	.C 20229	.30	6.4	0.51	30.5 m
1102	.C 20399	.30	9.6	0.64	30.5 m
1102	.C 203Y9	.30	9.6	0.64	30.5 m with yellow bracket
1102	.C 20499	.30	12.7	0.76	30.5 m
1102	.C 204B9	.30	12.7	0.76	30.5 m with blue bracket
1102	.C 20599	.30	15.9	0.76	30.5 m
1102	.C 205G9	.30	15.9	0.76	30.5 m with green bracket
1102	.C 20699	.30	19.1	0.76	30.5 m
1102	.C 206R9	.30	19.1	0.76	30.5 m with red bracket
1102	.G 43099	.30	19.1	1.1	30.5 m
1102	.G 43199	.30	25.4	1.1	30.5 m
1102	.G 43299	.30	31.8	1.1	30.5 m





Loose catching-loop „Series 1102“
„EAR-LOK loop“ for endless belts

Material and surface finish:
Raw stainless steel (V2A)

Article no.			Dimensions in mm		Package quantity
Series	Execution	Material Raw V2A	Width	Thickness	
1102	.C 25299	.30	6.4	1.3	100/St.
1102	.C 25399	.30	9.6	1.3	100/St.
1102	.C 25499	.30	12.7	1.3	100/St.
1102	.C 25599	.30	15.9	1.3	100/St.
1102	.C 25699	.30	19.1	1.3	100/St.
1102	.G 44099	.30	19.1	2.3	25/St.
1102	.G 44199	.30	25.4	2.3	25/St.
1102	.G 44299	.30	31.8	2.3	25/St.





Push the band through the catch	Bend it down	Push the band through the catch Single wrap
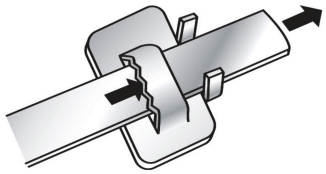	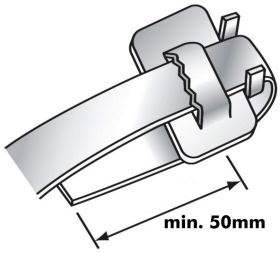	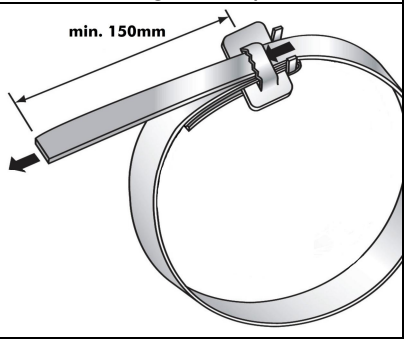

„BAND-IT“
Tension bands and Cable ties



Endless belt „Series 1102“
„BAND-IT Band“ for loose „EAR-LOK loop“

Material and surface finish:
Raw stainless steel (V4A)

Article no.		Dimensions in mm			Package quantity in m/roll
Series	Execution	Material Raw V4A	Width	Thickness	
1102	.C 40299	.35	6,4	0,51	30,5m
1102	.C 40399	.35	9,6	0,64	30,5m
1102	.C 403 Y 9	.35	9,6	0,64	30,5m with yellow bracket
1102	.C 40499	.35	12,7	0,76	30,5m
1102	.C 404 B 9	.35	12,7	0,76	30,5m with blue bracket
1102	.C 40599	.35	15,9	0,76	30,5m
1102	.C 405 G 9	.35	15,9	0,76	30,5m with green bracket
1102	.C 40699	.35	19,1	0,76	30,5m
1102	.C 406 R 9	.35	19,1	0,76	30,5m with red bracket
1102	.C 44499	.35	12,7	0,38	61m
1102	.C 444 B 9	.35	12,7	0,38	61m with blue bracket
1102	.C 44599	.35	15,9	0,38	61m
1102	.C 445 G 9	.35	15,9	0,38	61m with green bracket
1102	.C 44699	.35	19,1	0,38	61m
1102	.C 446 R 9	.35	19,1	0,38	61m with red bracket





Loose catching-loop „Series 1102“
„EAR-LOK loop“ for endless belts

Material and surface finish:
Raw stainless steel (V4A)

Article no..			Dimensions in mm		Package quantity
Series	Execution	Material Raw V4A	Width	Thickness	
1102	.C 45299	.35	6,4	1,3	100/St.
1102	.C 45399	.35	9,6	1,3	100/St.
1102	.C 45499	.35	12,7	1,3	100/St.
1102	.C 45599	.35	15,9	1,3	100/St.
1102	.C 55699	.35	19,1	1,3	100/St.





Push the band through the catch	Bend it down	Push the band through the catch Single wrap
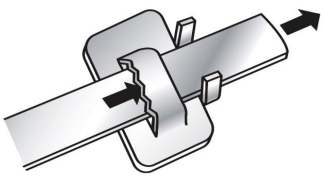	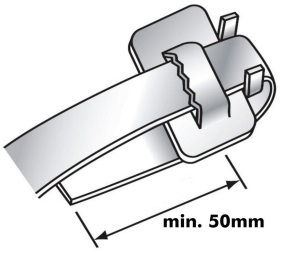	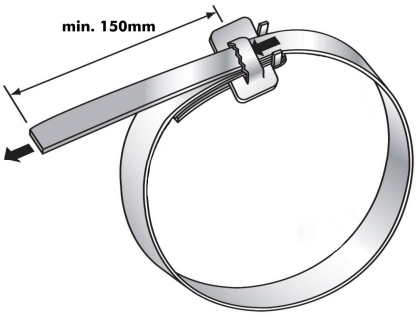

TÜVRheinland ZERTIFIZIERT
Management System ISO 9001:2015 ISO 14001:2015
www.tuv.com ID 9108624624

Further materials and surface finishes on demand. We will be pleased to give you advice.
Phone: +49 (0) 231 / 725 790 -0 eMail: info@hokon-verschlusstechnik.de
Fax: +49 (0) 231 / 725 790 -10 Homepage: www.hokon-verschlusstechnik.de

„BAND-IT“
Spannbänder und Kabelbinder

Clamping tools for „Series 1102“		
Art. no.: C 00189 up to 19.1 mm width	Art. no.: C 00369 up to 19.1 mm width	Art. no.: C 40099 up to 19.1 mm width
		
Art. no.: C08599 „Bantam-Ratchet“ up to 19.1 mm width		Art. no.: G40299 from 19.1mm width
		

How to use it Art. no.: C 00189		
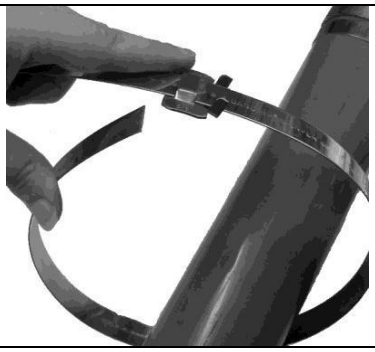		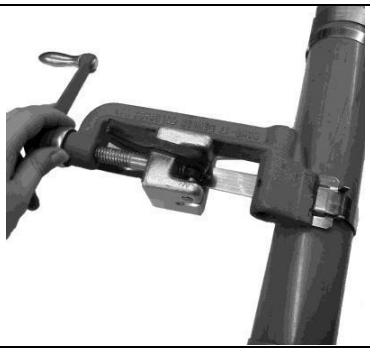
1. Pull the band through the catch	2. Nod it ca. 50 mm down	3. Insert it in the tool, turn it with a pivot lever
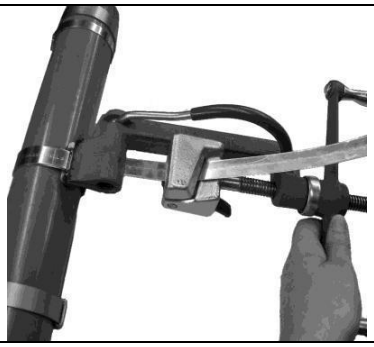	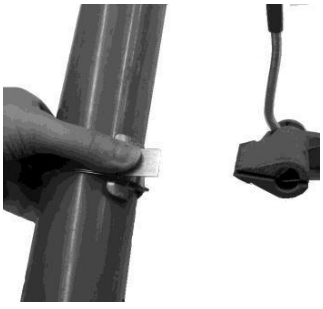	
4. Nod it in the opposite direction and cut it	5. Hold it	6. Jam it

„BAND-IT“
Tension bands and Cable ties

Self-closing band „Series 1103“
„BALL-LOK“ stainless steel cable ties
cut according to length

Material and surface finish:
Raw stainless steel (V2A)
Raw Stainless steel (V4A)



Article no.				Dimensions in mm				Package quantity
Series	Execution	Material Raw V2A	Material Raw V4A	Width	Thickness	Length	Max. diameter	
1103	.KE 1128	.30	-	4.6	0.25	201	50	100/St.
1103	.KE 1138	.30	-	4.6	0.25	259	69	100/St.
1103	.KE 1148	.30	-	4.6	0.25	360	102	100/St.
1103	.KE 1158	.30	-	4.6	0.25	520	152	100/St.
1103	.KE 1168	.30	-	4.6	0.25	679	203	100/St.
1103	.KE 1178	.30	-	4.6	0.25	838	254	100/St.
1103	.KE 1188	.30	-	4.6	0.25	1067	305	100/St.
1103	.KE 0128	-	.35	4.6	0.25	201	50	100/St.
1103	.KE 0138	-	.35	4.6	0.25	259	69	100/St.
1103	.KE 0148	-	.35	4.6	0.25	360	102	100/St.
1103	.KE 0158	-	.35	4.6	0.25	520	152	100/St.
1103	.KE 0168	-	.35	4.6	0.25	679	203	100/St.
1103	.KE 0178	-	.35	4.6	0.25	838	254	100/St.
1103	.KE 0188	-	.35	4.6	0.25	1067	305	100/St.
1103	.KE 1328	.30	-	7.9	0.25	201	50	100/St.
1103	.KE 1338	.30	-	7.9	0.25	259	69	100/St.
1103	.KE 1348	.30	-	7.9	0.25	360	102	100/St.
1103	.KE 1358	.30	-	7.9	0.25	520	152	100/St.
1103	.KE 1368	.30	-	7.9	0.25	679	203	100/St.
1103	.KE 1378	.30	-	7.9	0.25	838	254	100/St.
1103	.KE 1388	.30	-	7.9	0.25	1067	305	100/St.
1103	.KE 0328	-	.35	7.9	0.25	201	50	100/St.
1103	.KE 0338	-	.35	7.9	0.25	259	69	100/St.
1103	.KE 0348	-	.35	7.9	0.25	360	102	100/St.
1103	.KE 0358	-	.35	7.9	0.25	520	152	100/St.
1103	.KE 0368	-	.35	7.9	0.25	679	203	100/St.
1103	.KE 0378	-	.35	7.9	0.25	838	254	100/St.
1103	.KE 0388	-	.35	7.9	0.25	1067	305	100/St.

By greater dimensions we recommend our endless belts with loose catches.

Tension band „Series 1103“ may be used without a tool.

TÜVRheinland ZERTIFIZIERT Management System ISO 9001:2015 ISO 14001:2015 www.tuv.com ID 9108624624

Further materials and surface finishes on demand. We will be pleased to give you advice.
Phone: +49 (0) 231 / 725 790 -0 eMail: info@hokon-verschlusstechnik.de
Fax: +49 (0) 231 / 725 790 -10 Homepage: www.hokon-verschlusstechnik.de

„BAND-IT“
Spannbänder und Kabelbinder

Self closing band „Series 1103“
„BALL-LOK“ stainless steel cable ties
cut according to length, coated

Material and surface finish:
Plastic coated stainless steel (V2A)

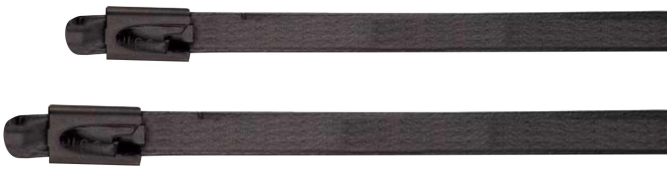

Article no.			Dimensions in mm				Package quantity
Series	Execution	Material Coating V2A	Width	Thickness	Length	Max. diameter	
1103	.KE 0228	.37	4.6	0.25	201	50	100/St.
1103	.KE 0238	.37	4.6	0.25	259	69	100/St.
1103	.KE 0248	.37	4.6	0.25	360	102	100/St.
1103	.KE 0258	.37	4.6	0.25	520	152	100/St.
1103	.KE 0268	.37	4.6	0.25	679	203	100/St.
1103	.KE 0278	.37	4.6	0.25	838	254	100/St.
1103	.KE 0428	.37	7.9	0.25	201	50	100/St.
1103	.KE 0438	.37	7.9	0.25	259	69	100/St.
1103	.KE 0448	.37	7.9	0.25	360	102	100/St.
1103	.KE 0458	.37	7.9	0.25	520	152	100/St.
1103	.KE 0468	.37	7.9	0.25	679	203	100/St.
1103	.KE 0478	.37	7.9	0.25	838	254	100/St.

By greater dimensions we recommend our endless belts with loose catches.

Tension band „Series 1103“ may be used without a tool.

Clamping tools for „Series 1103“		
Art. no.: K 50289 Adjustable tensile strength, tenses and cuts automatically	Art. no.: KE 9229 Tension tool with pivot lever	Art. no.: AE 2009
		

„BAND-IT“
Tension bands and Cable ties

Endless belt „Series 1103“
for loose „BALL-LOK“ catches

Material and surface finish:
Raw stainless steel (V2A)
Raw Stainless steel (V4A)



Article no.				Dimensions in mm		Package quantity in m/roll
Series	Execution	Material		Width	Thickness	
		Raw				
		V2A	V4A			
1103	.CE 3569	.30	-	4.6	0.25	100m
1103	.CE 2569	-	.35	4.6	0.25	100m
1103	.CE 1569	.30	-	7.9	0.25	100m
1103	.CE 4569	-	.35	7.9	0.25	100m

Loose catch „Series 1103“
„BALL-LOK“ catch for endless belts

Material and surface finish:
Raw stainless steel (V2A)
Raw Stainless steel (V4A)



Article no.			Dimensions in mm	Package quantity
Series	Execution	Material	Width	
		Raw		
		V4A		
1103	.CB 2569	.35	4.6	100/St.
1103	.CB 1569	.35	7.9	100/St.

Tension band „Series 1103“ may be used without a tool.

TÜVRheinland ZERTIFIZIERT Management System ISO 9001:2015 ISO 14001:2015 www.tuv.com ID 9108624624

Further materials and surface finishes on demand. We will be pleased to give you advice.
Phone: +49 (0) 231 / 725 790 -0 eMail: info@hokon-verschlusstechnik.de
Fax: +49 (0) 231 / 725 790 -10 Homepage: www.hokon-verschlusstechnik.de

„BAND-IT“
Spannbänder und Kabelbinder

Clamping tools for „Series 1103“		
Art. no.: C 00189 Adjustable tensile strength, tenses and cuts automatically	Art. no.: KE 9229 Tension tool with pivot lever	Art. no.: AE 2009
		

How to use it with trimming lever Art. no.: KE 9229	
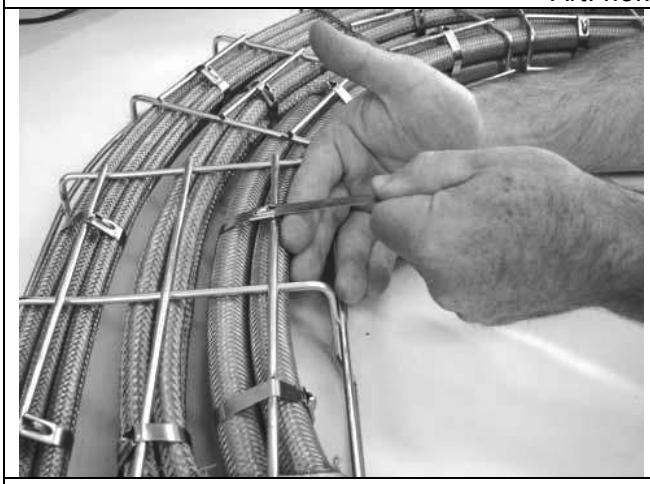	
1. Pull the band through the catch	2. Insert in tool
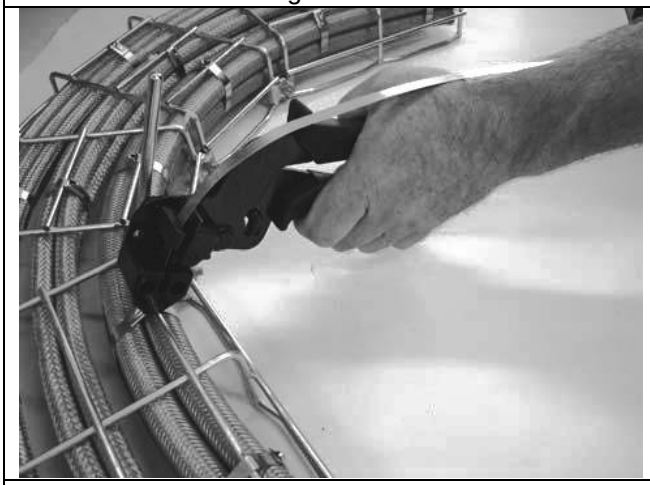	
3. Clamp it	4. Cut it

„BAND-IT“
Tension bands and Cable ties

Tension band „Series 1104“
„TIE-LOK“ stainless steel cable ties

Material and surface finish:
Raw stainless steel (V2A)
Raw Stainless steel (V4A)



Article no.				Dimensions in mm				Package quantity
Series	Execution	Material Raw V2A	Material Raw V4A	Width	Thickness	Length	Max. diameter	
1104	.AS 2219	.30	-	4.5	0.38			100/St.
1104	.AS 2229	.30	-	4.5	0.38			100/St.
1104	.AS 2239	.30	-	4.5	0.38			100/St.
1104	.AS 2249	.30	-	4.5	0.38			100/St.
1104	.AS 2259	.30	-	4.5	0.38			100/St.
1104	.AS 4219	-	35	4.5	0.38			100/St.
1104	.AS 4229	-	35	4.5	0.38			100/St.
1104	.AS 4239	-	35	4.5	0.38			100/St.
1104	.AS 4249	-	35	4.5	0.38			100/St.
1104	.AS 4259	-	35	4.5	0.38			100/St.
1104	.AS 2119	.30	-	6.4	0.38			100/St.
1104	.AS 2129	.30	-	6.4	0.38			100/St.
1104	.AS 2139	.30	-	6.4	0.38			100/St.
1104	.AS 2149	.30	-	6.4	0.38			100/St.
1104	.AS 2159	.30	-	6.4	0.38			100/St.
1104	.AS 4119	-	35	6.4	0.38			100/St.
1104	.AS 4129	-	35	6.4	0.38			100/St.
1104	.AS 4139	-	35	6.4	0.38			100/St.
1104	.AS 4149	-	35	6.4	0.38			100/St.
1104	.AS 4159	-	35	6.4	0.38			100/St.
1104	.AS 6219	.30	-	9.6	0.51			100/St.
1104	.AS 6229	.30	-	9.6	0.51			100/St.
1104	.AS 6239	.30	-	9.6	0.51			100/St.
1104	.AS 6249	.30	-	9.6	0.51			100/St.
1104	.AS 6259	.30	-	9.6	0.51			100/St.

TÜVRheinland ZERTIFIZIERT Management System ISO 9001:2015 ISO 14001:2015 www.tuv.com ID 9108624624

Further materials and surface finishes on demand. We will be pleased to give you advice.
Phone: +49 (0) 231 / 725 790 -0 eMail: info@hokon-verschlusstechnik.de
Fax: +49 (0) 231 / 725 790 -10 Homepage: www.hokon-verschlusstechnik.de

„BAND-IT“
Spannbänder und Kabelbinder

Clamping tools for „Series 1104“		
Art. no.: TL 3800 for 9.6 mm width	Art. no.: A 92079 for 6.4 mm width Adjustable tensile strength, tenses and cuts automatically	Art. no.: A 91079 Mini for 4. 5 mm width Adjustable tensile strength, tenses and cuts automatically
		

How to use it Art. no.: TL3800		
	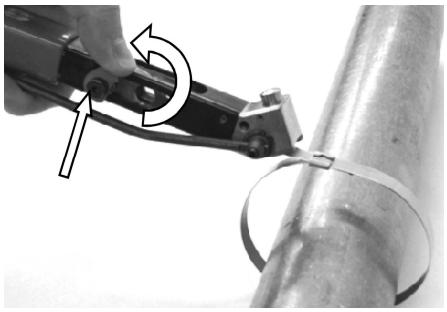	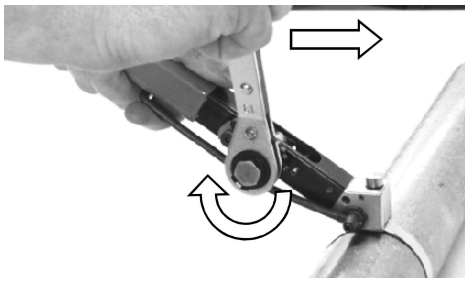
1. Pull the band at least 75 mm through the catch	2. Insert in the tool	3. Clamp it with a pivot lever
	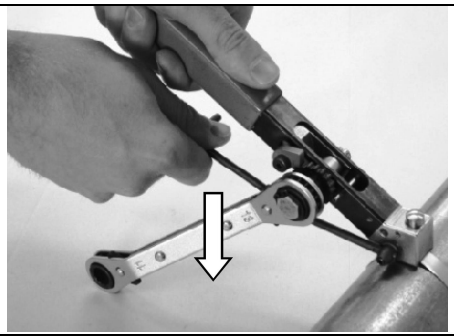	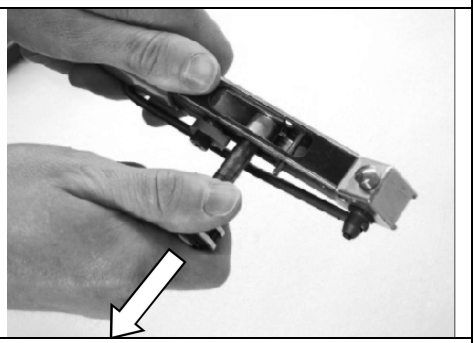
4. Jam the band with a hammer	5. Cut it	6. Take the rest off

„BAND-IT“
Tension bands and Cable ties



Endless belt „Series 1105“
„BAND-IT Band“ for loose „SCRU-LOKT loop“

Material and surface finish:
Raw Stainless steel (V4A)

Article no.			Dimensions in mm		Package quantity in m/roll
Series	Execution	Material: Raw V4A	Width	Thickness	
1105	.C 40299	.35	6.4	0.51	30.5 m
1105	.C 40399	.35	9.6	0.64	30.5 m
1105	.C 403 Y 9	.35	9.6	0.64	30.5 m with yellow bracket
1105	.C 40499	.35	12.7	0.76	30.5 m
1105	.C 404 B 9	.35	12.7	0.76	30.5 m with blue bracket
1105	.C 40599	.35	15.9	0.76	30.5 m
1105	.C 405 G 9	.35	15.9	0.76	30.5 m with green bracket
1105	.C 40699	.35	19.1	0.76	30.5 m
1105	.C 406 R 9	.35	19.1	0.76	30.5 m with red bracket
1105	.C 44499	.35	12.7	0.38	61 m
1105	.C 444 B 9	.35	12.7	0.38	61 m with blue bracket
1105	.C 44599	.35	15.9	0.38	61 m
1105	.C 445 G 9	.35	15.9	0.38	61 m with green bracket
1105	.C 44699	.35	19.1	0.38	61 m
1105	.C 446 R 9	.35	19.1	0.38	61 m with red bracket





Loose catches „Series 1105“
„SCRU-LOKT loop“ for endless belts

Material and surface finish:
Raw stainless steel (V2A)

Article no.			Dimensions in mm	Package quantity
Series	Execution	Material: Raw V2A	Width	
1105	.C 72099	.30	6.4	50/St.
1105	.C 72299	.30	9.6	50/St.
1105	.C 72499	.30	12.7	25/St.
1105	.C 72599	.30	15.9	25/St.
1105	.C 72699	.30	19.1	25/St.



Push the band through the catch	Bend it down	Push the band through the catch Single wrap
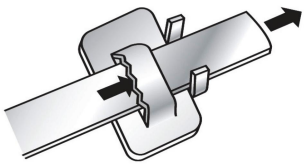	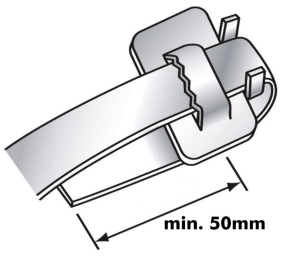	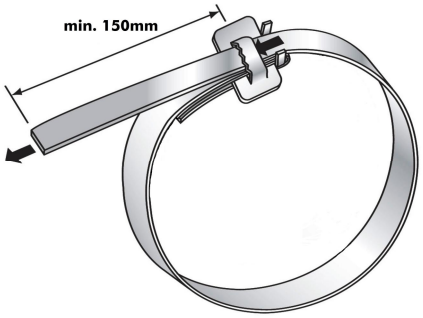

TÜVRheinland ZERTIFIZIERT
Management System ISO 9001:2015 ISO 14001:2015
www.tuv.com ID 9108624624

Further materials and surface finishes on demand. We will be pleased to give you advice.
Phone: +49 (0) 231 / 725 790 -0 eMail: info@hokon-verschlusstechnik.de
Fax: +49 (0) 231 / 725 790 -10 Homepage: www.hokon-verschlusstechnik.de

„BAND-IT“
Spannbänder und Kabelbinder

Clamping tools for „Series 1105“	
Art. no.: C 00189	Art. no.: C 00369
	
Art. no.: C 40099	Art. no.: C 08599 „Bantam-Ratchet“
	

How to use it Art. no.: C 00189		
		
1. Pull the band through the catch	2. Nod it ca.50mm down	3. Insert it in the tool, turn it with a pivot lever
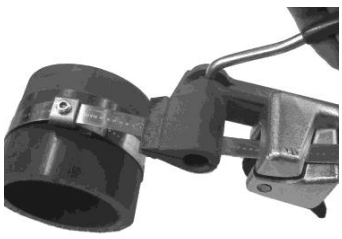		
4. Cut it off		5. Clamp it

„BAND-IT“
Tension bands and Cable ties

Self-closing band „Series 1106“
„MULTI-LOK“ stainless steel cable ties

Material and surface finish:
Raw Stainless steel (V4A)
Coated stainless steel (V4A)

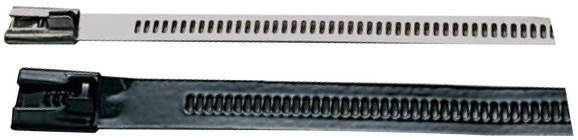

Article no.				Dimensions in mm				Package quantity
Series	Execution	Material		Width	Thickness	Length	Max. diameter	
		Raw	Coating					
		V4A	V4A					
1106	.AE 6019	.35	-	6.9	0.28	150	33	100/St.
1106	.AE 6029	.35	-	6.9	0.28	225	57	100/St.
1106	.AE 6039	.35	-	6.9	0.28	300	81	100/St.
1106	.AE 6049	.35	-	6.9	0.28	450	129	100/St.
1106	.AE 6059	.35	-	6.9	0.28	610	180	100/St.
1106	.AE 7019	.35	-	11.9	0.46	150	33	100/St.
1106	.AE 7029	.35	-	11.9	0.46	225	57	100/St.
1106	.AE 7039	.35	-	11.9	0.46	300	81	100/St.
1106	.AE 7049	.35	-	11.9	0.46	450	129	100/St.
1106	.AE 7059	.35	-	11.9	0.46	610	180	100/St.
1106	.AE 6119	-	.37	6.9	0.28	150	33	100/St.
1106	.AE 6129	-	.37	6.9	0.28	225	57	100/St.
1106	.AE 6139	-	.37	6.9	0.28	300	81	100/St.
1106	.AE 6149	-	.37	6.9	0.28	450	129	100/St.
1106	.AE 6159	-	.37	6.9	0.28	610	180	100/St.
1106	.AE 7119	-	.37	11.9	0.46	150	33	100/St.
1106	.AE 7129	-	.37	11.9	0.46	225	57	100/St.
1106	.AE 7139	-	.37	11.9	0.46	300	81	100/St.
1106	.AE 7149	-	.37	11.9	0.46	450	129	100/St.
1106	.AE 7159	-	.37	11.9	0.46	610	180	100/St.

Tension band „Series 1106“ may be used without a tool.

Clamping tools for „Series 1106“		
Art. no.: M 50389 Adjustable tensile strength, tenses and cuts automatically	Art. no.: AE 2009	Art. no.: AE 2018
	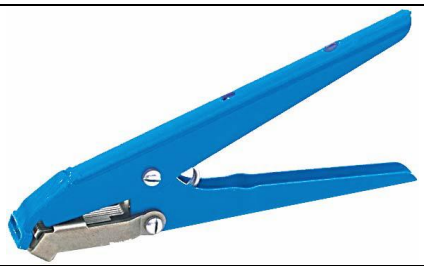	

TÜVRheinland ZERTIFIZIERT
Management System
ISO 9001:2015
ISO 14001:2015
www.tuv.com ID 9108624624

Further materials and surface finishes on demand. We will be pleased to give you advice.
Phone: +49 (0) 231 / 725 790 -0 eMail: info@hokon-verschlusstechnik.de
Fax: +49 (0) 231 / 725 790 -10 Homepage: www.hokon-verschlusstechnik.de

Hose clips and Pipe clips



Hose clips and Pipe clips

Materials and surface finishes:

W1 **Zinc plated** - completely made of coated steel, small requirement from the corrosion resistance.

W2 **STAINLESS STEEL** - band and housing (chrome-steel 1.4016), GALVANIZED screw. From small up to middle requirement from the corrosion resistance, but with warranty of solvability of corrosive connections.

W4 **STAINLESS STEEL** – complete chrome-nickel-steel 1.4301 (or similar steel). Also known as V2A. Great requirements from the corrosion resistance and design.

W5 **completely** made of chrome-nickel-molybdenum-steel 1.4571 (1.4401). Also known as V4A. W5 is seawater-resistant and heavily magnetizable. Great requirements from the corrosion resistance.

Art. no.	Designation	Function	Package content
7200000002	mounting plier	for front and side assembly of ear clamps	1



Art. no.	Designation	Function	Package content
1200070000	flexible screw driver SW 7	fixing of worm-drive clamps	1



Assortment boxes

Worm-drive clamps TI 9/TI 12

1-ear clamp or 2-ear clamp

Available on enquiry.

TÜVRheinland ZERTIFIZIERT Management System ISO 9001:2015 ISO 14001:2015 www.tuv.com ID 9108624624

Further materials and surface finishes on demand. We will be pleased to give you advice.
Phone: +49 (0) 231 / 725 790 -0 eMail: info@hokon-verschlusstechnik.de
Fax: +49 (0) 231 / 725 790 -10 Homepage: www.hokon-verschlusstechnik.de

Hose clips and pipe clips

Worm-drive clamps „TI 9“
with embossed band

Art. no.	Material				Ø in mm	Width in mm	Package content
	W1	W2	W4	W5			
100801209/	**1**	**2**	**3**	**4**	8-12	9	50
101001609/	**1**	**2**	**4**	**5**	10-16	9	50
101202009/	**1**	**2**	**4**	**5**	12-20	9	50
101202209/	**1**	**2**	**4**	**5**	12-22	9	50
101602709/	**1**	**2**	**4**	**5**	16-27	9	50
102003209/	**1**	**2**	**4**	**5**	20-32	9	50
102303509/	**1**	**2**	**4**	**5**	23-35	9	50
102504009/	**1**	**2**	**4**	**5**	25-40	9	50
103004509/	**1**	**2**	**4**	**5**	30-45	9	25
103205009/	**1**	**2**	**4**	**5**	32-50	9	25
104006009/	**1**	**2**	**4**	**5**	40-60	9	25
105007009/	**1**	**2**	**4**	**5**	50-70	9	25
106008009/	**1**	**2**	**4**	**5**	60-80	9	25
107009009/	**1**	**2**	**4**	**5**	70-90	9	25
108010009/	**1**	**2**	**4**	**5**	80-100	9	25
109011009/	**1**	**2**	**4**	**5**	90-110	9	25
110012009/	**1**	**2**	**4**	**5**	100-120	9	25
111013009/	**1**	**2**	**4**	**5**	110-130	9	25
112014009/	**1**	**2**	**4**	**5**	120-140	9	25
113015009/	**1**	**2**	**4**	**5**	130-150	9	25
114016009/	**1**	**2**	**4**	**5**	140-160	9	25
115017009/	**1**	**2**	**4**	**5**	150-170	9	25
116018009/	**1**	**2**	**4**	**5**	160-180	9	25
117019009/	**1**	**2**	**4**	**5**	170-190	9	25
118020009/	**1**	**2**	**4**	**5**	180-200	9	25
119021009/	**1**	**2**	**4**	**5**	190-210	9	25
120022009/	**1**	**2**	**4**	**5**	200-220	9	25
121023009/	**1**	**2**	**4**	**5**	210-230	9	25
122024009/	**1**	**2**	**4**	**5**	220-240	9	25
123025009/	**1**	**2**	**4**	**5**	230-250	9	25
124026009/	**1**	**2**	**4**	**5**	240-260	9	25
125027009/	**1**	**2**	**4**	**5**	250-270	9	25
126028009/	**1**	**2**	**4**	**5**	260-280	9	25
127029009/	**1**	**2**	**4**	**5**	270-290	9	25
128030009/	**1**	**2**	**4**	**5**	280-300	9	25
129031009/	**1**	**2**	**4**	**5**	290-310	9	25
130032009/	**1**	**2**	**4**	**5**	300-320	9	25

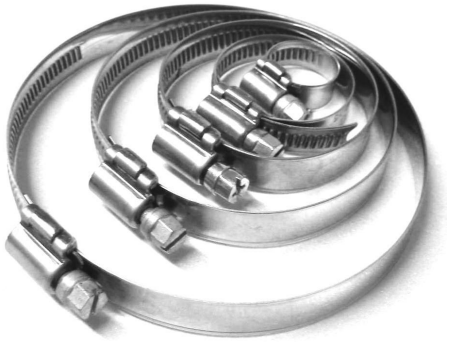



Order example:

Art.no. 1 008012 09 1/2"/4/5

- **Material W1; W2; W4; W5**
- **Bandwidth in mm**
- **Band clambing range Ø in mm**
- **Worm drive hose clip**

By greater dimensions, we recommend our endless band (EB) with loose headers or our fastening clamp with folding housing (VF).

hose clips
and pipe clips

Worm-drive clamps „TI 12“
with embossed band

Art. no.	Material				Ø in mm	Width in mm	Package content
	W1	W2	W4	W5			
101602712/	**1**	**2**	**4**	**5**	16-27	12	50
102003212/	**1**	**2**	**4**	**5**	20-32	12	50
102303512/	**1**	**2**	**4**	**5**	23-35	12	50
102504012/	**1**	**2**	**4**	**5**	25-40	12	50
103004512/	**1**	**2**	**4**	**5**	30-45	12	50
103205012/	**1**	**2**	**4**	**5**	32-50	12	50
104006012/	**1**	**2**	**4**	**5**	40-60	12	25
105007012/	**1**	**2**	**4**	**5**	50-70	12	25
106008012/	**1**	**2**	**4**	**5**	60-80	12	25
107009012/	**1**	**2**	**4**	**5**	70-90	12	25
108010012/	**1**	**2**	**4**	**5**	80-100	12	25
109011012/	**1**	**2**	**4**	**5**	90-110	12	25
110012012/	**1**	**2**	**4**	**5**	100-120	12	25
111013012/	**1**	**2**	**4**	**5**	110-130	12	15
112014012/	**1**	**2**	**4**	**5**	120-140	12	15
113015012/	**1**	**2**	**4**	**5**	130-150	12	15
114016012/	**1**	**2**	**4**	**5**	140-160	12	15
115017012/	**1**	**2**	**4**	**5**	150-170	12	15
116018012/	**1**	**2**	**4**	**5**	160-180	12	15
117019012/	**1**	**2**	**4**	**5**	170-190	12	15
118020012/	**1**	**2**	**4**	**5**	180-200	12	15
119021012/	**1**	**2**	**4**	**5**	190-210	12	15
120022012/	**1**	**2**	**4**	**5**	200-220	12	15
121023012/	**1**	**2**	**4**	**5**	210-230	12	15
122024012/	**1**	**2**	**4**	**5**	220-240	12	15
123025012/	**1**	**2**	**4**	**5**	230-250	12	15
124026012/	**1**	**2**	**4**	**5**	240-260	12	15
125027012/	**1**	**2**	**4**	**5**	250-270	12	15
126028012/	**1**	**2**	**4**	**5**	260-280	12	15
127029012/	**1**	**2**	**4**	**5**	270-290	12	15
128030012/	**1**	**2**	**4**	**5**	280-300	12	15
129031012/	**1**	**2**	**4**	**5**	290-310	12	15
130032012/	**1**	**2**	**4**	**5**	300-320	12	15

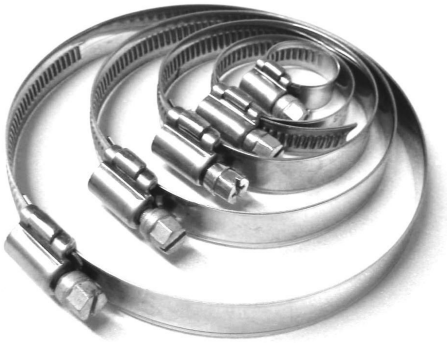



Order example:
Art.no. 1 008012 09 1/2"/4/5

- **Material W1; W2; W4; W5**
- **Bandwidth in mm**
- **Band clambing range Ø in mm**
- **Worm drive hose clip**

By greater dimensions, we recommend our endless band (EB) with loose headers or our fastening clamp with folding housing (VF).

TÜVRheinland ZERTIFIZIERT Management System ISO 9001:2015 ISO 14001:2015 www.tuv.com ID 9108624624

Further materials and surface finishes on demand. We will be pleased to give you advice.
Phone: +49 (0) 231 / 725 790 -0 eMail: info@hokon-verschlusstechnik.de
Fax: +49 (0) 231 / 725 790 -10 Homepage: www.hokon-verschlusstechnik.de

Hose clips and pipe clips

Worm-drive clamps „TI 8“

with punched-through band

Art. no.	Material				Ø in mm	Width in mm	Package content
	W1	W2	W4	W5			
100601608/	**-**	**2**	**4**	**-**	6-16	8	100
100701708/	**-**	**2**	**4**	**-**	7-17	8	100
100802208/	**-**	**2**	**4**	**-**	8-22	8	100
101002708/	**-**	**2**	**4**	**-**	10-27	8	100
101303808/	**-**	**2**	**4**	**-**	13-38	8	100
101904408/	**-**	**2**	**4**	**-**	19-44	8	100
102605108/	**-**	**2**	**4**	**-**	26-51	8	100
103205708/	**-**	**2**	**4**	**-**	32-57	8	100
103806308/	**-**	**2**	**4**	**-**	38-63	8	100
104507008/	**-**	**2**	**4**	**-**	45-70	8	100
105708208/	**-**	**2**	**4**	**-**	57-82	8	100
106408908/	**-**	**2**	**4**	**-**	64-89	8	100
117610208/	**-**	**2**	**4**	**-**	76-102	8	100



Worm-drive clamps „LF 5“

with punched-through band

Art. no.	Material				Ø in mm	Width in mm	Package content
	W1	W2	W4	W5			
100701105/	**-**	**2**	**4**	**-**	7-11	5	100
101001905/	**-**	**2**	**4**	**-**	10-19	5	100



Endless band with loose headers „EB 13“

with punched-through band

Art. no.	Material				Width in mm	Package content
	W1	W2	W4	W5		
121300003B	**-**	**yes**	**-**	**-**	13	Band 3 m / 6 heads
121300030B	**-**	**yes**	**-**	**-**	13	30 m
121300050K	**-**	**yes**	**-**	**-**	13	50 heads
141300003B	**-**	**-**	**yes**	**-**	13	Band 3 m / 6 heads
141300030B	**-**	**-**	**yes**	**-**	13	30 m
141300050K	**-**	**-**	**yes**	**-**	13	50 heads



Order example:

Art.no. 1 008012 09 1/2"/4/5

1 – **Worm drive hose clip**

008012 – **Band clambing range Ø in mm**

09 – **Bandwidth in mm**

1/2"/4/5 – **Material W1; W2; W4; W5**

By greater dimensions, we recommend our endless band (EB) with loose headers or our fastening clamp with folding housing (VF).

hose clips
and pipe clips

Fastening clamps „VF 9“
with embossed band

Art. no.	Material				Ø in mm	Width in mm	Package content
	W1	W2	W4	W5			
160080VF09/	**-**	**2**	**4**	**-**	60-80	9	100
160090VF09/	**-**	**2**	**4**	**-**	60-90	9	100
160110VF09/	**-**	**2**	**4**	**-**	60-110	9	100
160135VF09/	**-**	**2**	**4**	**-**	60-135	9	100
160145VF09/	**-**	**2**	**4**	**-**	60-145	9	100
160170VF09/	**-**	**2**	**4**	**-**	60-170	9	100
160215VF09/	**-**	**2**	**4**	**-**	60-215	9	100
160270VF09/	**-**	**2**	**4**	**-**	60-270	9	100
160325VF09/	**-**	**2**	**4**	**-**	60-325	9	100
160380VF09/	**-**	**2**	**4**	**-**	60-380	9	100
160425VF09/	**-**	**2**	**4**	**-**	60-425	9	100
160525VF09/	**-**	**2**	**4**	**-**	60-525	9	100
160660VF09/	**-**	**2**	**4**	**-**	60-660	9	100



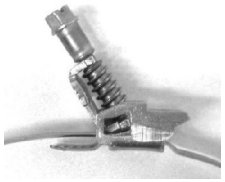

Fastening clamps „VF 12“
with embossed band

Art. no.	Material				Ø in mm	Width in mm	Package content
	W1	W2	W4	W5			
160080VF12/	**-**	**2**	**-**	**-**	60-80	12	100
160090VF12/	**-**	**2**	**-**	**-**	60-90	12	100
160110VF12/	**-**	**2**	**-**	**-**	60-110	12	100
160135VF12/	**-**	**2**	**-**	**-**	60-135	12	100
160145VF12/	**-**	**2**	**-**	**-**	60-145	12	100
160170VF12/	**-**	**2**	**-**	**-**	60-170	12	100
160215VF12/	**-**	**2**	**-**	**-**	60-215	12	100
160270VF12/	**-**	**2**	**-**	**-**	60-270	12	100
160325VF12/	**-**	**2**	**-**	**-**	60-325	12	100
160380VF12/	**-**	**2**	**-**	**-**	60-380	12	100
160425VF12/	**-**	**2**	**-**	**-**	60-425	12	100
160525VF12/	**-**	**2**	**-**	**-**	60-525	12	100
160660VF12/	**-**	**2**	**-**	**-**	60-660	12	100



Endless band „EB 9“ with loose foldable headers „VF“
with embossed band

Art. no.	Material				Width in mm	Package content
	W1	W2	W4	W5		
110900003B	**yes**	**-**	**-**	**-**	9	3 m / 6 heads
120900030B	**-**	**yes**	**-**	**-**	9	30 m
110900050K	**yes**	**-**	**-**	**-**	9	50 heads
140900003B	**-**	**-**	**yes**	**-**	9	Band 3 m / 6 heads
140900030B	**-**	**-**	**yes**	**-**	9	30 m
140900050K	**-**	**-**	**yes**	**-**	9	50 heads





TÜVRheinland ZERTIFIZIERT
Management System
ISO 9001:2015
ISO 14001:2015
www.tuv.com
ID 9108624624

Further materials and surface finishes on demand. We will be pleased to give you advice.
Phone: +49 (0) 231 / 725 790 -0
Fax: +49 (0) 231 / 725 790 -10
eMail: info@hokon-verschlusstechnik.de
Homepage: www.hokon-verschlusstechnik.de

Hose clips and pipe clips

Hinge bolt clamps „GBS“

1-part

Art. no.	Material				Ø in mm	Width in mm	Package content
	W1	W2	W4	W5			
2_18101719	1	-	-	5	17-19	18	50
2_18102022	1	-	-	5	20-22	18	50
2_18102325	1	-	-	5	23-25	18	50
2_18102628	1	-	-	5	26-28	18	50
2_18102931	1	-	-	5	29-31	18	50
2_20103235	1	-	-	5	32-35	20	50
2_20103639	1	-	-	5	36-39	20	50
2_20104043	1	-	-	5	40-43	20	50
2_20104447	1	-	-	5	44-47	20	50
2_20104851	1	-	-	5	48-51	20	50
2_20105255	1	-	-	5	52-55	20	25
2_20105659	1	-	-	5	56-59	20	25
2_20106063	1	-	-	5	60-63	20	25
2_25106467	1	-	-	5	64-67	25	25
2_25106873	1	-	-	5	68-73	25	25
2_25107479	1	-	-	5	74-79	25	25
2_25108085	1	-	-	5	80-85	25	25
2_25108691	1	-	-	5	86-91	25	25
2_25109297	1	-	-	5	92-97	25	25
2_251098103	1	-	-	5	98-103	25	24
2_251104112	1	-	-	5	104-112	25	24
2_251113121	1	-	-	5	113-121	25	20
2_251122130	1	-	-	5	122-130	25	16
2_251131139	1	-	-	5	131-139	25	16
2_251140148	1	-	-	5	140-148	25	12
2_251149161	1	-	-	5	149-161	25	8
2_251162174	1	-	-	5	162-174	25	8
2_251175187	1	-	-	5	175-187	25	8
2_251188200	1	-	-	5	188-200	25	5
2_251201213	1	-	-	5	201-213	25	5
2_251214226	1	-	-	5	214-226	25	5
2_251227239	1	-	-	5	227-239	25	5
2_251240252	1	-	-	5	240-252	25	5



Further sizes and materials are available on enquiry.

hose clips
and pipe clips

Hinge bolt clamps „GBS“

2-part

Art. no.	Material				Ø in mm	Width in mm	Package content
	W1	W2	W4	W5			
2_20204048	**1**	**-**	**-**	**5**	40-48	20	5
2_20204856	**1**	**-**	**-**	**5**	48-56	20	5
2_20205664	**1**	**-**	**-**	**5**	56-64	20	5
2_20206472	**1**	**-**	**-**	**5**	64-72	20	5
2_20207280	**1**	**-**	**-**	**5**	72-80	20	5
2_20208088	**1**	**-**	**-**	**5**	80-88	20	5
2_20208896	**1**	**-**	**-**	**5**	88-96	20	5
2_202096104	**1**	**-**	**-**	**5**	96-104	20	5
2_25208095	**1**	**-**	**-**	**5**	80-95	25	5
2_252095110	**1**	**-**	**-**	**5**	95-110	25	5
2_252110125	**1**	**-**	**-**	**5**	110-125	25	5
2_252125140	**1**	**-**	**-**	**5**	125-140	25	5
2_252140155	**1**	**-**	**-**	**5**	140-155	25	5
2_252155170	**1**	**-**	**-**	**5**	155-170	25	5
2_252170185	**1**	**-**	**-**	**5**	170-185	25	5
2_252185205	**1**	**-**	**-**	**5**	185-205	25	5
2_252205225	**1**	**-**	**-**	**5**	205-225	25	5
2_252225245	**1**	**-**	**-**	**5**	225-245	25	5
2_302185205	**1**	**-**	**-**	**5**	185-205	30	5
2_302205225	**1**	**-**	**-**	**5**	205-225	30	5
2_302225245	**1**	**-**	**-**	**5**	225-245	30	5
2_302245265	**1**	**-**	**-**	**5**	245-265	30	5
2_302265285	**1**	**-**	**-**	**5**	265-285	30	5
2_302285305	**1**	**-**	**-**	**5**	285-305	30	5
2_302305325	**1**	**-**	**-**	**5**	305-325	30	5
2_302325345	**1**	**-**	**-**	**5**	325-345	30	5
2_302345365	**1**	**-**	**-**	**5**	345-365	30	5
2_302365385	**1**	**-**	**-**	**5**	365-385	30	5
2_302385405	**1**	**-**	**-**	**5**	385-405	30	5
2_302405425	**1**	**-**	**-**	**5**	405-425	30	5
2_302425445	**1**	**-**	**-**	**5**	425-445	30	5
2_302445465	**1**	**-**	**-**	**5**	445-465	30	5



Further sizes and materials are available on enquiry.

TÜVRheinland ZERTIFIZIERT
Management System ISO 9001:2015 ISO 14001:2015
www.tuv.com ID 9108624624

Further materials and surface finishes on demand. We will be pleased to give you advice.
Phone: +49 (0) 231 / 725 790 -0 eMail: info@hokon-verschlusstechnik.de
Fax: +49 (0) 231 / 725 790 -10 Homepage: www.hokon-verschlusstechnik.de

Hose clips and pipe clips

Elongated hose clamp „chimney clamps“ with welding sockets

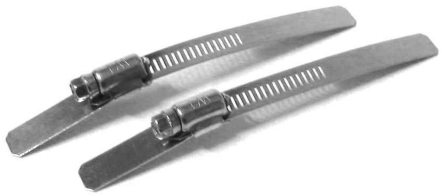

Art. no.	Material				Length in mm	Width in mm	Package content
	W1	W2	W4	W5			
3409100170	-	-	yes	-	100-170	9	-

Further sizes and quantities on enquiry.

Art. no.	Material				Length in mm	Width in mm	Package content
	W1	W2	W4	W5			
3413100170	-	-	yes	-	100-170	13	-

Order example:
Art.no. 3 1/2/4/5 13 100170

- 100170 – Band length
- 13 – Bandwidth in mm
- 1/2/4/5 – Material W1; W2; W4; W5
- 3 – Stretched worm drive hose clip

Double wire clamps „DDK“



Art. no.	Material				Pipe Ø in mm	Package content
	W1	W2	W4	W5		
5911000016	**yes**	**-**	**-**	**-**	13-16	50
5911000018	**yes**	**-**	**-**	**-**	15-18	50
5911000020	**yes**	**-**	**-**	**-**	17-20	50
5911000023	**yes**	**-**	**-**	**-**	19-23	50
5911000025	**yes**	**-**	**-**	**-**	22-25	50
5911000027	**yes**	**-**	**-**	**-**	24-27	50
5911000031	**yes**	**-**	**-**	**-**	27-31	50
5911000035	**yes**	**-**	**-**	**-**	31-35	50
5911000037	**yes**	**-**	**-**	**-**	33-37	50
5911000040	**yes**	**-**	**-**	**-**	36-40	50
5911000043	**yes**	**-**	**-**	**-**	39-43	50
5911000046	**yes**	**-**	**-**	**-**	41-46	50
5911000049	**yes**	**-**	**-**	**-**	44-49	50
5911000053	**yes**	**-**	**-**	**-**	47-53	50
5911000056	**yes**	**-**	**-**	**-**	51-56	50
5911000060	**yes**	**-**	**-**	**-**	54-60	50
5911000068	**yes**	**-**	**-**	**-**	60-68	50
5911000072	**yes**	**-**	**-**	**-**	64-72	50

Further sizes and materials are available on enquiry.

hose clips
and pipe clips

Clamping jaws „S 9“

Art. no.	Material				Ø in mm	Width in mm	Package content
	W1	W2	W4	W5			
6_09100008	1	-	-	-	8	9	100
6_09100009	1	-	-	-	9	9	100
6_09100010	1	-	-	-	10	9	100
6_09100011	1	-	-	-	11	9	100
6_09100012	1	-	-	-	12	9	100
6_09100013	1	-	-	-	13	9	100
6_09100014	1	-	-	-	14	9	100
6_09100015	1	-	-	-	15	9	100
6_09100016	1	-	-	-	16	9	100
6_09100017	1	-	-	-	17	9	100
6_09100018	1	-	-	-	18	9	100
6_09100019	1	-	-	-	19	9	100
6_09100020	1	-	-	-	20	9	100
6_09100021	1	-	-	-	21	9	100



Order example:
Art.no. 6 1/2/4/5 12 1 12

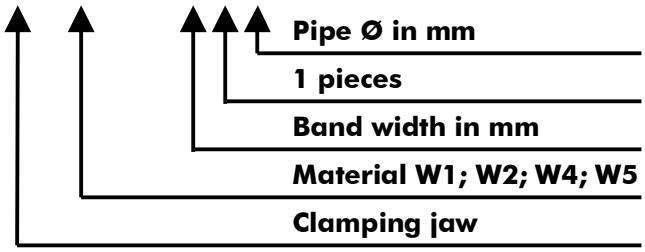

Further sizes and materials are available on enquiry.

TÜVRheinland ZERTIFIZIERT Management System ISO 9001:2015 ISO 14001:2015 www.tuv.com ID 9108624624

Further materials and surface finishes on demand. We will be pleased to give you advice.
Phone: +49 (0) 231 / 725 790 -0 eMail: info@hokon-verschlusstechnik.de
Fax: +49 (0) 231 / 725 790 -10 Homepage: www.hokon-verschlusstechnik.de

Hose clips and pipe clips

Clamping jaws „S 12“

Art. no.	Material				Ø in mm	Width in mm	Package content
	W1	W2	W4	W5			
6_12100012	1	-	-	-	12	12	100
6_12100013	1	-	-	-	13	12	100
6_12100014	1	-	-	-	14	12	100
6_12100015	1	-	-	-	15	12	100
6_12100016	1	-	-	-	16	12	100
6_12100017	1	-	-	-	17	12	100
6_12100018	1	-	-	-	18	12	100
6_12100019	1	-	-	-	19	12	100
6_12100020	1	-	-	-	20	12	100
6_12100021	1	-	-	-	21	12	100
6_12100022	1	-	-	-	22	12	100
6_12100023	1	-	-	-	23	12	100
6_12100024	1	-	-	-	24	12	100
6_12100025	1	-	-	-	25	12	100
6_12100026	1	-	-	-	26	12	100
6_12100027	1	-	-	-	27	12	100
6_12100028	1	-	-	-	28	12	100
6_12100029	1	-	-	-	29	12	100
6_12100030	1	-	-	-	30	12	100
6_12100031	1	-	-	-	31	12	100
6_12100032	1	-	-	-	32	12	100
6_12100033	1	-	-	-	33	12	100
6_12100034	1	-	-	-	34	12	100
6_12100035	1	-	-	-	35	12	100
6_12100036	1	-	-	-	36	12	100
6_12100037	1	-	-	-	37	12	100
6_12100038	1	-	-	-	38	12	100
6_12100039	1	-	-	-	39	12	100
6_12100040	1	-	-	-	40	12	100
6_12100041	1	-	-	-	41	12	100
6_12100042	1	-	-	-	42	12	100
6_12100043	1	-	-	-	43	12	100
6_12100044	1	-	-	-	44	12	100
6_12100045	1	-	-	-	45	12	100



Order example:

Art.no. 6 1/2/4/5 12 1 12

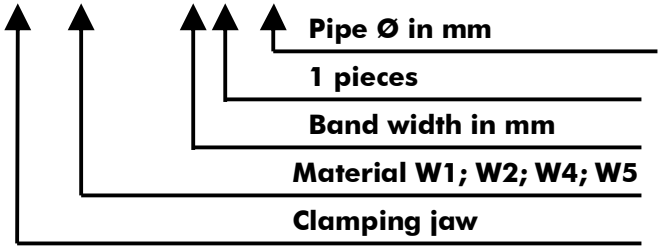

Further sizes and materials are available on enquiry.

hose clips
and pipe clips

Clamping jaws „S 15“

Art. no.	Material				Ø in mm	Width in mm	Package content
	W1	W2	W4	W5			
6_15100021	1	-	-	-	21	15	100
6_15100022	1	-	-	-	22	15	100
6_15100023	1	-	-	-	23	15	100
6_15100024	1	-	-	-	24	15	100
6_15100025	1	-	-	-	25	15	100
6_15100026	1	-	-	-	26	15	100
6_15100027	1	-	-	-	27	15	100
6_15100028	1	-	-	-	28	15	100
6_15100029	1	-	-	-	29	15	100
6_15100030	1	-	-	-	30	15	100
6_15100031	1	-	-	-	31	15	100
6_15100032	1	-	-	-	32	15	100
6_15100033	1	-	-	-	33	15	100
6_15100034	1	-	-	-	34	15	100
6_15100035	1	-	-	-	35	15	100
6_15100036	1	-	-	-	36	15	100
6_15100037	1	-	-	-	37	15	100
6_15100038	1	-	-	-	38	15	100
6_15100039	1	-	-	-	39	15	100
6_15100040	1	-	-	-	40	15	100
6_15100041	1	-	-	-	41	15	100
6_15100042	1	-	-	-	42	15	100
6_15100043	1	-	-	-	43	15	100
6_15100044	1	-	-	-	44	15	100
6_15100045	1	-	-	-	45	15	100
6_15100046	1	-	-	-	46	15	100
6_15100047	1	-	-	-	47	15	100
6_15100048	1	-	-	-	48	15	100
6_15100049	1	-	-	-	49	15	100
6_15100050	1	-	-	-	50	15	100
6_15100051	1	-	-	-	51	15	100
6_15100052	1	-	-	-	52	15	100
6_15100053	1	-	-	-	53	15	100
6_15100054	1	-	-	-	54	15	100
6_15100055	1	-	-	-	55	15	100
6_15100056	1	-	-	-	56	15	100



Order example:

Art.no. 6 1/2/4/5 12 1 12

- **Pipe Ø in mm**
- **1 pieces**
- **Band width in mm**
- **Material W1; W2; W4; W5**
- **Hinge bolts clamps**

Further sizes and materials are available on enquiry.

TÜVRheinland ZERTIFIZIERT Management System ISO 9001:2015 ISO 14001:2015 www.tuv.com ID 9108624624

Further materials and surface finishes on demand. We will be pleased to give you advice.
Phone: +49 (0) 231 / 725 790 -0 eMail: info@hokon-verschlusstechnik.de
Fax: +49 (0) 231 / 725 790 -10 Homepage: www.hokon-verschlusstechnik.de

Hose clips and pipe clips

„1-ear clamp“

Art. no.	Material				Ø in mm	Width in mm	Package content
	W1	W2	W4	W5			
7_10000709	-	-	4	-	7-9	6	100
7_10000810	1	-	4	-	8-10	6	100
7_10000911	1	-	4	-	9-11	6,5	100
7_10001012	1	-	4	-	10-12	6,5	100
7_10001113	1	-	4	-	11-13	6,5	100
7_10001214	1	-	4	-	12-14	7	100
7_10001416	1	-	4	-	14-16	7	100
7_10001618	1	-	4	-	16-18	7	100



„1-ear clamp“

Art. no.	Material				Ø in mm	Width in mm	Package content
	W1	W2	W4	W5			
7_10075085	1	-	4	-	7,5-8,5	6	100
7_10082095	1	-	4	-	8,2-9,5	6	100
7_10090105	1	-	4	-	9,0-10,5	6,5	100
7_10100115	1	-	4	-	10,0-11,5	6,5	100
7_10105125	1	-	4	-	10,5-12,5	6,5	100
7_10115133	1	-	4	-	11,5-13,5	7	100
7_10130153	1	-	4	-	13,0-15,3	7	100
7_10150173	1	-	4	-	15,0-17,3	7	100
7_10130153	-	-	4	-	16,0-18,3	7,5	100
7_10150173	-	-	4	-	17,0-19,3	7,5	100



Order example:

Art.no. 7 1/2/4/5 1000 05-07

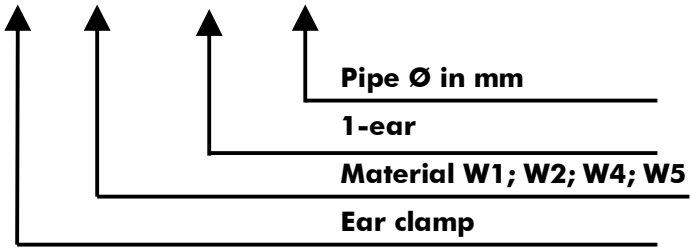

By greater dimensions, we recommend our endless band (EB) with loose headers or our fastening clamp with folding housing (VF).

hose clips
and pipe clips

„2-ear clamp“

Art. no.	Material				Ø in mm	Width in mm	Package content
	W1	W2	W4	W5			
7_00000507	1	-	4	-	5-7	6	100
7_00000709	1	-	4	-	7-9	6	100
7_00000911	1	-	4	-	9-11	6,5	100
7_00001113	1	-	4	-	11-13	6,5	100
7_00001315	1	-	4	-	13-15	7	100
7_00001417	1	-	4	-	14-17	7	100
7_00001518	1	-	4	-	15-18	7,5	100
7_00001720	1	-	4	-	17-20	7,5	100
7_00001821	1	-	4	-	18-21	8	100
7_00002023	1	-	4	-	20-23	8	100
7_00002225	1	-	4	-	22-25	8,5	100
7_00002327	1	-	-	-	23-27	8,5	100
7_00002528	1	-	-	-	25-28	9	100
7_00002831	1	-	-	-	28-31	9	100
7_00003134	1	-	-	-	31-34	9,5	100
7_00003437	1	-	-	-	34-37	9,5	100
7-00003740	1	-	-	-	37-40	10	100
7_00004043	1	-	-	-	40-43	10	100
7_00004346	1	-	-	-	43-46	10,5	100





Order example:
Art.no. 7 1/2/4/5 0000 05-07

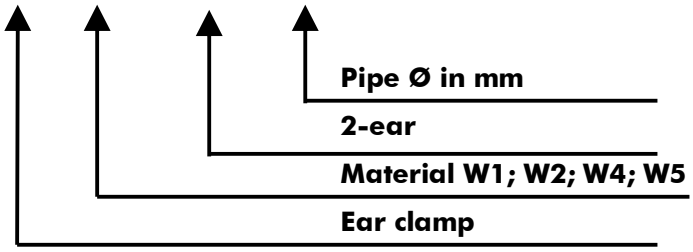

By greater dimensions, we recommend our endless band (EB) with loose headers or our fastening clamp with folding housing (VF).

TÜVRheinland ZERTIFIZIERT Management System ISO 9001:2015 ISO 14001:2015 www.tuv.com ID 9108624624

Further materials and surface finishes on demand. We will be pleased to give you advice.
Phone: +49 (0) 231 / 725 790 -0 eMail: info@hokon-verschlusstechnik.de
Fax: +49 (0) 231 / 725 790 -10 Homepage: www.hokon-verschlusstechnik.de

Hose clips and pipe clips

Clamp retainers **„RS“** **(without elastomer profile)**
„RSGU“ **(with elastomer profile)**

Art. no.	Material				Pipe Ø in mm	Width in mm	Package content
	W1	W2	W4	W5			
8_12_ _0005	1	-	4	5	5	12	100
8_12_ _0006	1	-	4	5	6	12	100
8_12_ _0007	1	-	4	5	7	12	100
8_12_ _0008	1	-	4	5	8	12	100
8_12_ _0009	1	-	4	5	9	12	100
8_12_ _0010	1	-	4	5	10	12	100
8_12_ _0011	1	-	4	5	11	12	100
8_12_ _0012	1	-	4	5	12	12	100
8_12_ _0013	1	-	4	5	13	12	100
8_12_ _0014	1	-	4	5	14	12	100
8_12_ _0015	1	-	4	5	15	12	100
8_12_ _0016	1	-	4	5	16	12	100
8_12_ _0017	1	-	4	5	17	12	100
8_12_ _0018	1	-	4	5	18	12	100
8_12_ _0019	1	-	4	5	19	12	100
8_12_ _0020	1	-	4	5	20	12	100
8_12_ _0021	1	-	4	5	21	12	100
8_12_ _0022	1	-	4	5	22	12	100
8_12_ _0023	1	-	4	5	23	12	100
8_12_ _0024	1	-	4	5	24	12	100
8_12_ _0025	1	-	4	5	25	12	100
8_12_ _0026	1	-	4	5	26	12	100
8_12_ _0027	1	-	4	5	27	12	100
8_12_ _0028	1	-	4	5	28	12	100
8_12_ _0029	1	-	4	5	29	12	100
8_12_ _0030	1	-	4	5	30	12	100



Please insert the art. no. on the enquiry / order according to the form and material of the product.

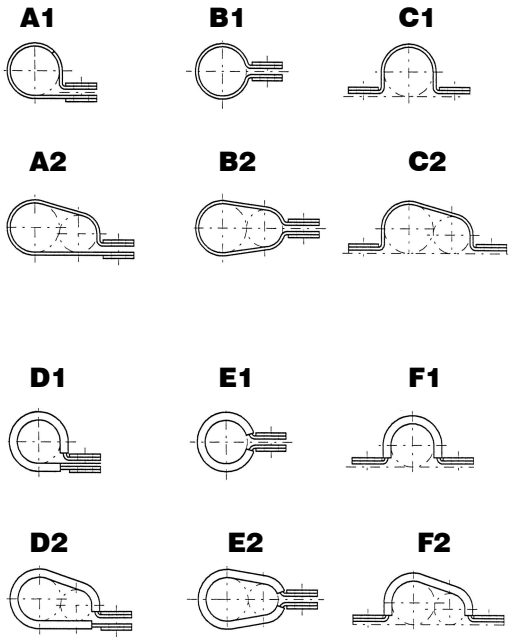

Order example:
Art.no. 8 1/2/4/5 12 A100 05

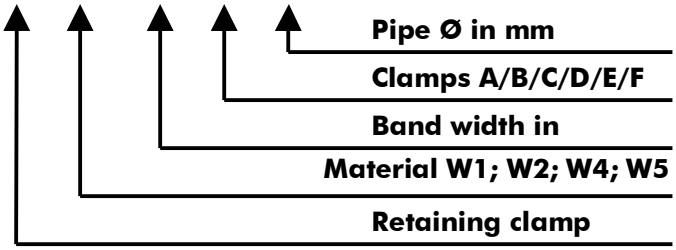

Further sizes and materials are available on enquiry.

hose clips
and pipe clips

Clamp retainers **„RS“ (without elastomer profile)**
„RSGU“ (with elastomer profile)

Art. no.	Material				Pipe Ø in mm	Width in mm	Package content
	W1	W2	W4	W5			
8_15_ _0005	1	-	4	5	5	15	100
8_15_ _0006	1	-	4	5	6	15	100
8_15_ _0007	1	-	4	5	7	15	100
8_15_ _0008	1	-	4	5	8	15	100
8_15_ _0009	1	-	4	5	9	15	100
8_15_ _0010	1	-	4	5	10	15	100
8_15_ _0011	1	-	4	5	11	15	100
8_15_ _0012	1	-	4	5	12	15	100
8_15_ _0013	1	-	4	5	13	15	100
8_15_ _0014	1	-	4	5	14	15	100
8_15_ _0015	1	-	4	5	15	15	100
8_15_ _0016	1	-	4	5	16	15	100
8_15_ _0017	1	-	4	5	17	15	100
8_15_ _0018	1	-	4	5	18	15	100
8_15_ _0019	1	-	4	5	19	15	100
8_15_ _0020	1	-	4	5	20	15	100
8_15_ _0021	1	-	4	5	21	15	100
8_15_ _0022	1	-	4	5	22	15	100
8_15_ _0023	1	-	4	5	23	15	100
8_15_ _0024	1	-	4	5	24	15	100
8_15_ _0025	1	-	4	5	25	15	100
8_15_ _0026	1	-	4	5	26	15	100
8_15_ _0027	1	-	4	5	27	15	100
8_15_ _0028	1	-	4	5	28	15	100
8_15_ _0029	1	-	4	5	29	15	100
8_15_ _0030	1	-	4	5	30	15	100
8_15_ _0031	1	-	4	5	31	15	100
8_15_ _0032	1	-	4	5	32	15	100
8_15_ _0033	1	-	4	5	33	15	100
8_15_ _0034	1	-	4	5	34	15	100
8_15_ _0035	1	-	4	5	35	15	100
8_15_ _0036	1	-	4	5	36	15	100
8_15_ _0037	1	-	4	5	37	15	100
8_15_ _0038	1	-	4	5	38	15	100
8_15_ _0039	1	-	4	5	39	15	100
8_15_ _0040	1	-	4	5	40	15	100



Please insert the art. no. on the enquiry / order according to the form and material of the product.

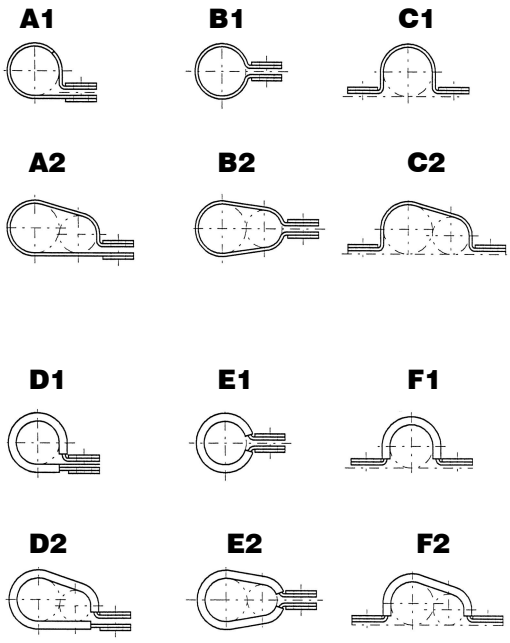

Order example:
Art.no. 8 1/2/4/5 12 A100 05

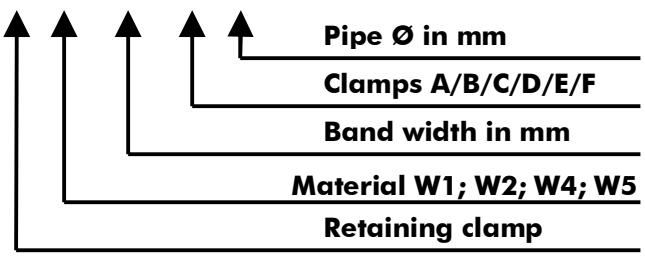

TÜVRheinland ZERTIFIZIERT Management System ISO 9001:2015 ISO 14001:2015 www.tuv.com ID 9108624624

Further materials and surface finishes on demand. We will be pleased to give you advice.
Phone: +49 (0) 231 / 725 790 -0 eMail: info@hokon-verschlusstechnik.de
Fax: +49 (0) 231 / 725 790 -10 Homepage: www.hokon-verschlusstechnik.de

Hose clips and pipe clips

Clamp retainers **„RS“** **(without elastomer profile)**
„RSGU“ **(with elastomer profile)**

Art. no.	Material				Pipe Ø in mm	Width in mm	Package content
	W1	W2	W4	W5			
8_20_ _0008	1	-	4	5	8	20	100
8_20_ _0009	1	-	4	5	9	20	100
8_20_ _0010	1	-	4	5	10	20	100
8_20_ _0011	1	-	4	5	11	20	100
8_20_ _0012	1	-	4	5	12	20	100
8_20_ _0013	1	-	4	5	13	20	100
8_20_ _0014	1	-	4	5	14	20	100
8_20_ _0015	1	-	4	5	15	20	100
8_20_ _0016	1	-	4	5	16	20	100
8_20_ _0017	1	-	4	5	17	20	100
8_20_ _0018	1	-	4	5	18	20	100
8_20_ _0019	1	-	4	5	19	20	100
8_20_ _0020	1	-	4	5	20	20	100
8_20_ _0021	1	-	4	5	21	20	100
8_20_ _0022	1	-	4	5	22	20	100
8_20_ _0023	1	-	4	5	23	20	100
8_20_ _0024	1	-	4	5	24	20	100
8_20_ _0025	1	-	4	5	25	20	100
8_20_ _0026	1	-	4	5	26	20	100
8_20_ _0027	1	-	4	5	27	20	100
8_20_ _0028	1	-	4	5	28	20	100
8_20_ _0029	1	-	4	5	29	20	100
8_20_ _0030	1	-	4	5	30	20	100
8_20_ _0031	1	-	4	5	31	20	100
8_20_ _0032	1	-	4	5	32	20	100
8_20_ _0033	1	-	4	5	33	20	100
8_20_ _0034	1	-	4	5	34	20	100
8_20_ _0035	1	-	4	5	35	20	100
8_20_ _0036	1	-	4	5	36	20	100
8_20_ _0037	1	-	4	5	37	20	100
8_20_ _0038	1	-	4	5	38	20	100
8_20_ _0039	1	-	4	5	39	20	100
8_20_ _0040	1	-	4	5	40	20	100



Please insert the art. no. on the enquiry / order according to the form and material of the product.

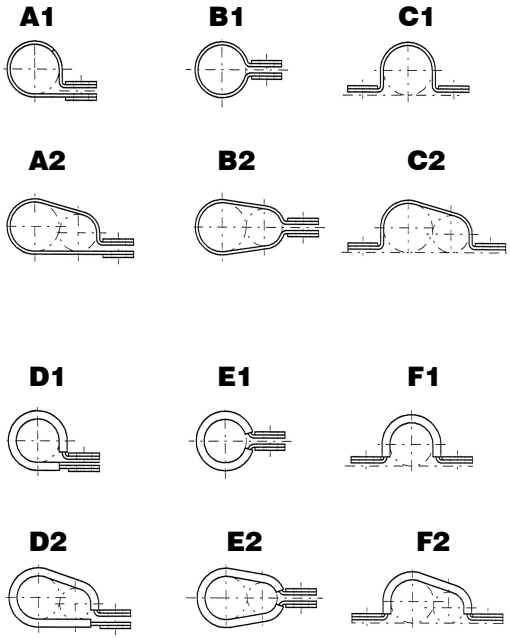

Order example:

Art.no. 8 1/2/4/5 12 A100 05

- **Pipe Ø in mm**
- **Clamps A/B/C/D/E/F**
- **Band width in mm**
- **Material W1; W2; W4; W5**
- **Retaining clamp**

Further sizes and materials are available on enquiry.

hose clips
and pipe clips

TÜVRheinland ZERTIFIZIERT
Management System
ISO 9001:2015
ISO 14001:2015
www.tuv.com
ID 9108624624

Further materials and surface finishes on demand. We will be pleased to give you advice.
Phone: +49 (0) 231 / 725 790 -0
Fax: +49 (0) 231 / 725 790 -10
eMail: info@hokon-verschlusstechnik.de
Homepage: www.hokon-verschlusstechnik.de

HoKon

VERSCHLUSSTECHNIK &
SONDERKONSTRUKTIONEN

Zertifiziert nach DIN EN ISO 9001:2008



Box handles with return spring

Pull handles
Plastic handles

Drop handles

TÜVRheinland ZERTIFIZIERT

Management System
ISO 9001:2015
ISO 14001:2015

www.tuv.com
ID 9108624624



FOLDER 3 HANDLES

FOLDER 1 LATCHES

FOLDER 2 TENSION BANDS

FOLDER 3 HANDLES

BOX HANDLES ..... D

- DROP HANDLES D-1
- BOX HANDLES WITH RETURN SPRING D-21
- PULL HANDLES D-41
- PLASTIC HANDLE AND SHELL GRIPS D-51
- LASHING LUGS D-61

FOLDER 4 HINGES

FOLDER 5 LOCKING DEVICES

FOLDER 6 THREADED INSERTS

FOLDER 7 SUNDRIES

GENERAL TERMS AND CONDITIONS .....

Phone: +49 (0) 231 / 725 790 -0 eMail: info@hokon-verschlusstechnik.de
Fax: +49 (0) 231 / 725 790 -10 Homepage: www.hokon-verschlusstechnik.de

Drop handles



Art.:1054

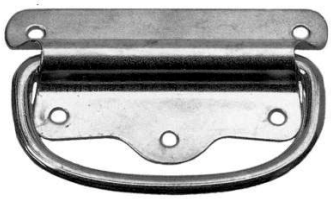

Art.:1055



Art.:3101



Art.:2130



Art.:2134



Art.:2135



Art.:3102



Art.:3120



Art.:3512



Art.:100.H1030

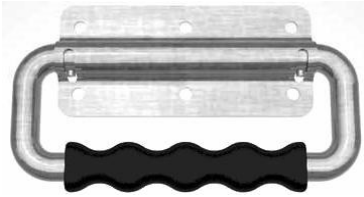

Art.:100.HE2457



Drop handles



Art.:6407



Art.:6420



Art.:6431



Art.:6440



Art.:6442



Art.:6444



Art.:6451



Art.:6457.03



Art.:6457.04



Art.:6457.05



Art.:6460.01



Art.:6460.06

TÜVRheinland ZERTIFIZIERT
Management System
ISO 9001:2015
ISO 14001:2015
www.tuv.com ID 9108624624

Further materials and surface finishes on demand. We will be pleased to give you advice.
Phone: +49 (0) 231 / 725 790 -0 eMail: info@hokon-verschlusstechnik.de
Fax: +49 (0) 231 / 725 790 -10 Homepage: www.hokon-verschlusstechnik.de



Drop handles

Materials and surface finishes:

.00	raw steel (1.1203)
.01	nickel-plated
.02	brassed
.03	chromated
.04	zinc plated steel
.05	bronzed
.06	black zinc plated
.07	blued
.08	yellow chromated
.09	EPD (Electrophoretic deposition)
.10	anodized silver-coloured
.20	raw brass
.22	polished brass
.23	chromated brass
.30	raw stainless steel (1.4301)
.33	polished stainless steel
.35	raw stainless steel (1.4401)
.50	raw Zamak (zinc aluminium magnesium copper)
.70	raw aluminium
.80	raw polyamide

Ordering example:

Art.No. 1053 01. 04/30

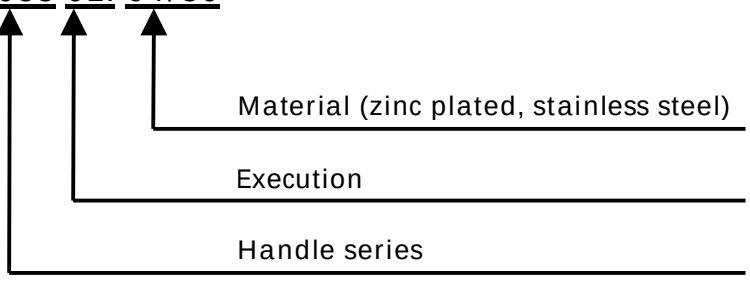

Drop handles

Art. no.: 1054 (drilled and countersunk)

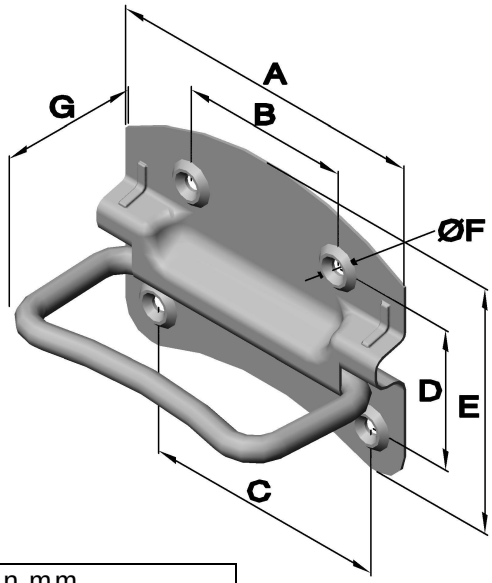

Article no.					Dimensions in mm						
Series	Execution	Material			A	B	C	D	E	Ø F	G
		Brassed	Zinc plated	Blued							
		Steel	Steel	Steel							
1054	.09	.02	.04	.07	90	42	72	40	67	4.2	40
1054	.11	.02	.04	.07	110	57	84	48	84	4.5	55

Art. no.: 1055 (drilled)

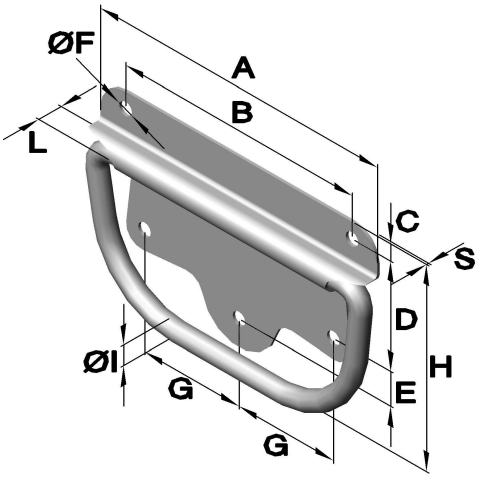

Article no.					Dimensions in mm										
Series	Execution	Material			A	B	C	D	E	Ø F	G	H	Ø I	L	S
		Brassed	Zinc plated	Blued											
		Steel	Steel	Steel											
1055	.08	.02	.04	.07	80	66	7	24	7	4	27	56	6	9	1
1055	.09	.02	.04	.07	90	75	6	31	8	4.4	30	61	6.5	9	1
1055	.10	.02	.04	.07	100	80	7	30	10	4.4	32.5	62.5	6.5	9	1
1055	.11	.02	.04	.07	110	90	6	38	12	5	37.5	66.5	7	9	1

TÜVRheinland ZERTIFIZIERT
Management System ISO 9001:2015 ISO 14001:2015
www.tuv.com ID 9108624624

Further materials and surface finishes on demand. We will be pleased to give you advice.
Phone: +49 (0) 231 / 725 790 -0 eMail: info@hokon-verschlusstechnik.de
Fax: +49 (0) 231 / 725 790 -10 Homepage: www.hokon-verschlusstechnik.de

Drop handles

Art. no.: 2130 (drilled and countersunk)

Article no.		Dimensions in mm							
Series	Material: Zinc plated / Steel	A	B	C	D	E	Ø F	Ø I	S
2130	.04	140	124	74	90	12	7	8	2

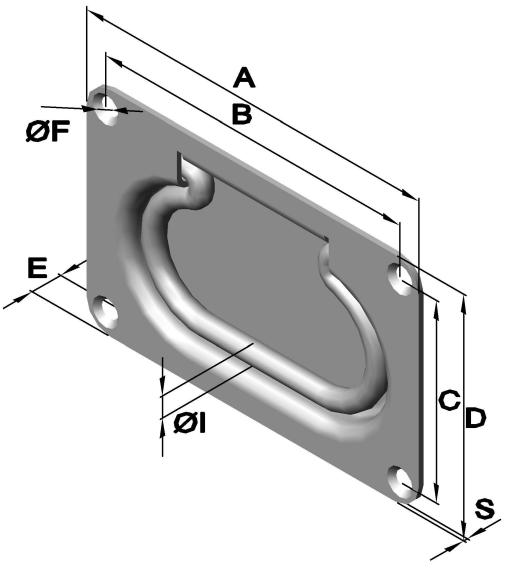

Art. no.: 2134 (drilled and countersunk)

Article no.			Dimensions in mm							
Series	Material: Zinc plated	Material: Raw	A	B	C	D	E	Ø F	Ø I	S
	Steel	Stainless steel								
2134	.04	.30	130	116	56	70	11.5	5	7	1.5

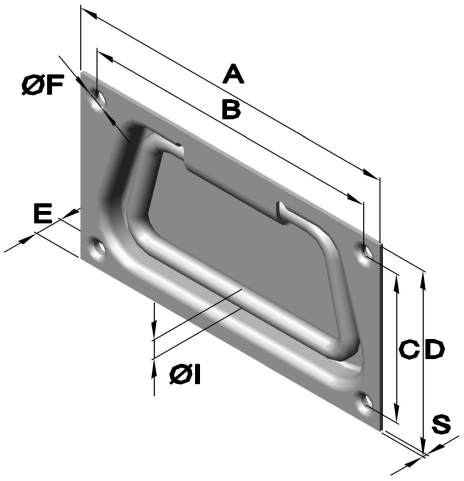

Art. no.: 2135 (drilled and countersunk)

Article no.		Dimensions in mm							
Series	Material: Zinc plated / Steel	A	B	C	D	E	Ø F	Ø I	S
2135	.04	130	110	70	90	12	6	7	1.5

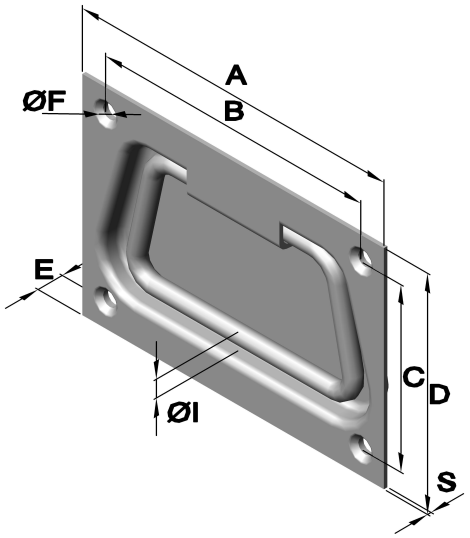

Drop handles

Art. no.: 3101 (drilled and countersunk)

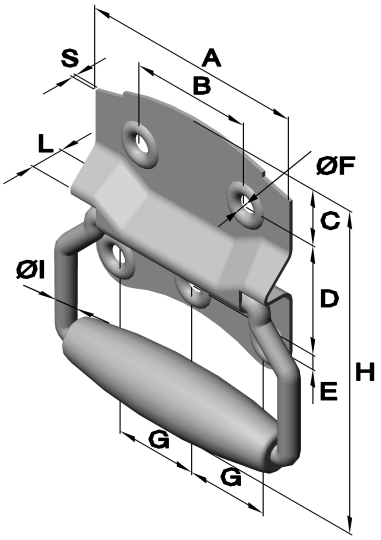

Article no.				Dimensions in mm										
Series	Material			A	B	C	D	E	ØF	G	H	ØI	L	S
	Zinc plated	Black blued	Yellow chromated											
	Steel	Steel	Steel											
3101	.04	.07	.08	92	50	23	45	6	7	36	128	8	17,5	1,5

Art. no.: 3102 (drilled)

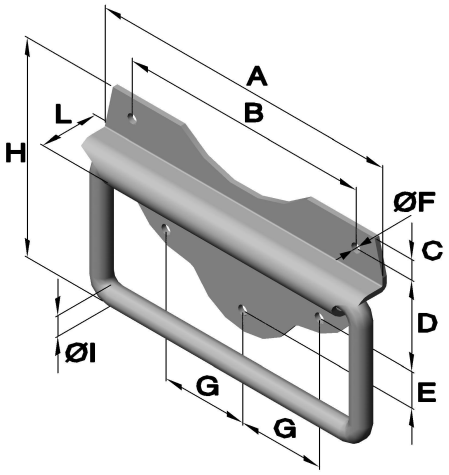

Article no.		Dimensions in mm									
Series	Material	A	B	C	D	E	ØF	G	H	ØI	L
	Zinc plated										
	Steel										
3102	.04	123	98	8	35	14	4	34	74	8	14,5

Art. no.: 3119/3122 (drilled and countersunk)

Art. no.: 3120 (drilled and countersunk)
with rubber hose

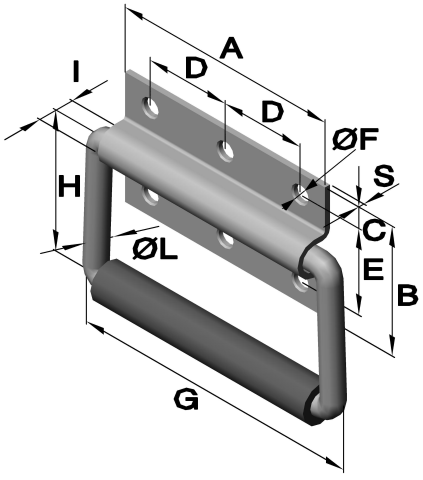

Article no.		Dimensions in mm										
Series	Material	A	B	C	D	E	ØF	G	H	I	ØL	S
	Zinc plated											
	Steel											
3119	.04	80	45	7,5	60	30	2x5	103	57	13	8	1,5
3120	.04	122	47	7	52	33	3x6	145	57	12	8	1,5
3122	.04	122	47	7	52	33	3x6	145	57	12	8	1,5

TÜVRheinland ZERTIFIZIERT Management System ISO 9001:2015 ISO 14001:2015 www.tuv.com ID 9108624624

Further materials and surface finishes on demand. We will be pleased to give you advice.
Phone: +49 (0) 231 / 725 790 -0 eMail: info@hokon-verschlusstechnik.de
Fax: +49 (0) 231 / 725 790 -10 Homepage: www.hokon-verschlusstechnik.de

Drop handles

Art. no.: 3510 (drilled)

available on request
with return springs

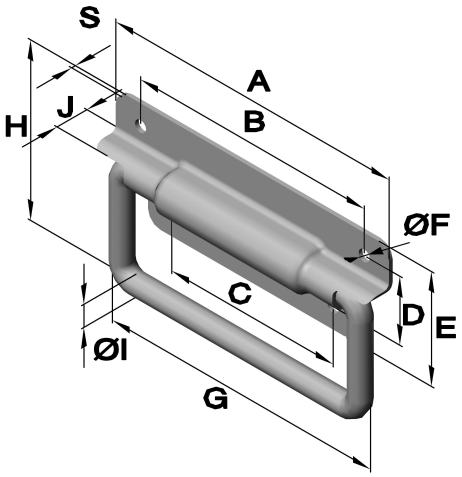

Article no.		Dimensions in mm										
Series	Material: Zinc plated / Steel	A	B	C	D	E	ØF	G	H	ØI	J	S
3510	.04	110	90	65	25	40	5	100	63	6	13	1,5

Art. no.: 3511 (drilled)

Different drop handles
available on request

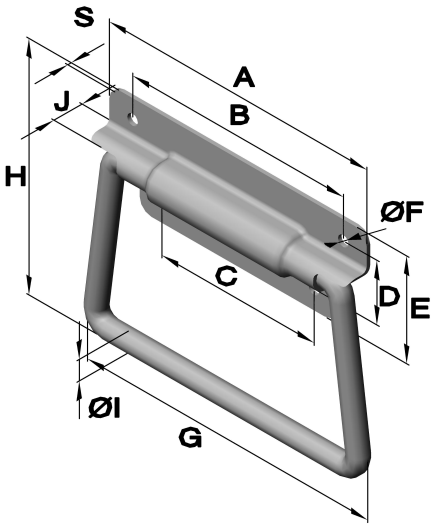

Article no.		Dimensions in mm										
Series	Material: Zinc plated / Steel	A	B	C	D	E	ØF	G	H	ØI	J	S
3511	.04	110	90	65	25	40	5	121	88	6	13	1,5

art. no.: 3512 (drilled)

Different drop handles
available on request

Maximum load: ca.25 kg

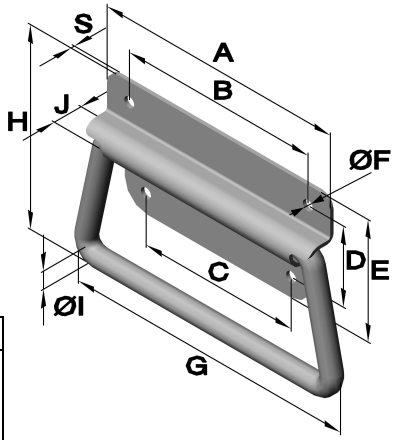

Article no.			Dimensions in mm										
Series	material: Zinc plated / Steel	Raw / Stainless steel	A	B	C	D	E	ØF	G	H	ØI	J	S
3512	-	.30	100	82	65	31,5	47,5	4,5	118	73	6	10	1,5
3512	.04	-	100	80	65	31,5	47,5	4,5	118	73	6	10	1,5

Drop handles

Art. no.: 6407 (drilled)

Maximum load: max. 90 kg

Opening angle: up to 90°

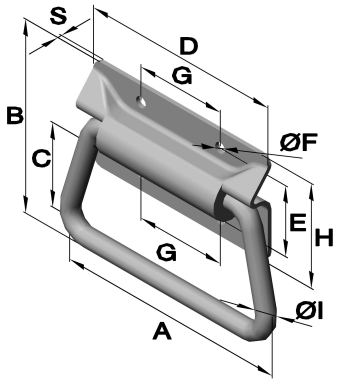

Article no.		Dimensions in mm									
Series	Material: Zinc plated / Steel	A	B	C	D	E	ØF	G	H	ØI	S
6407	.04	104,8	73,7	35	85,6	30,2	4,8	38,9	44,7	7,8	1,8

Art. no.: 6420 (drilled)

Maximum load: max. 68 kg

Opening angle: up to 180°

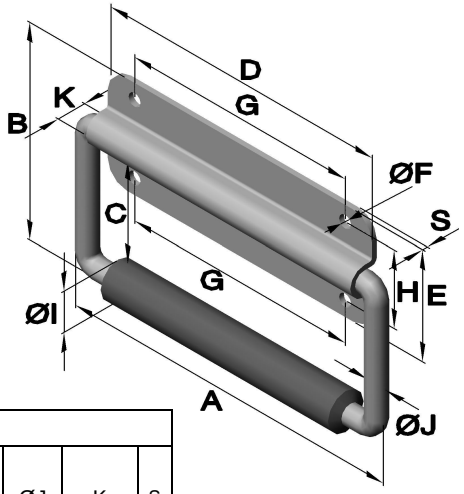

Article no.			Dimensions in mm											
Series	Execution	Material: Zinc plated / Steel	A	B	C	D	E	ØF	G	H	ØI	ØJ	K	S
6420	.64	.04	130	80	38,1	111,8	40,9	5	88,9	28,6	15	7,8	11,2	2

Art. no.: 6431 (drilled and countersunk)

Maximum load: max. 60 kg

Opening angle: up to 80°

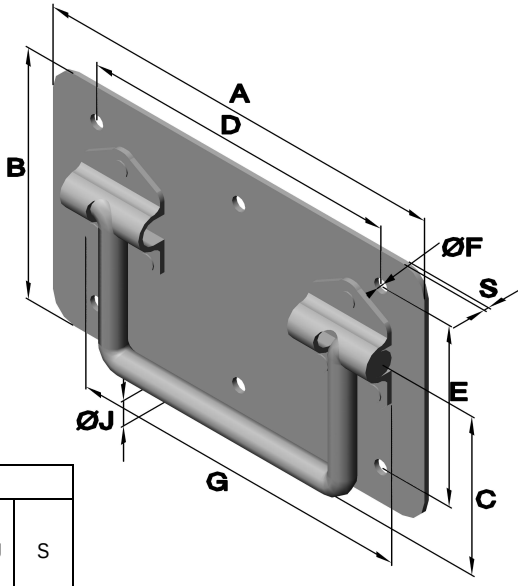

Article no.				Dimensions in mm								
Series	Execution	Material: Raw / Steel	Material: Zinc plated / Steel	A	B	C	D	E	ØF	G	ØJ	S
6431	.01	.00	.04	170	100,5	62	130	70,5	6	141	10	1,5

TÜVRheinland ZERTIFIZIERT Management System ISO 9001:2015 ISO 14001:2015 www.tuv.com ID 9108624624

Further materials and surface finishes on demand. We will be pleased to give you advice.
Phone: +49 (0) 231 / 725 790 -0 eMail: info@hokon-verschlusstechnik.de
Fax: +49 (0) 231 / 725 790 -10 Homepage: www.hokon-verschlusstechnik.de

Drop handles

Art. no.: 6440 (drilled and countersunk)
delivered in parts

Maximum load: max. 100 kg /pair
Opening angle: up to 90°
Installation opening: 97,5 x 47,5

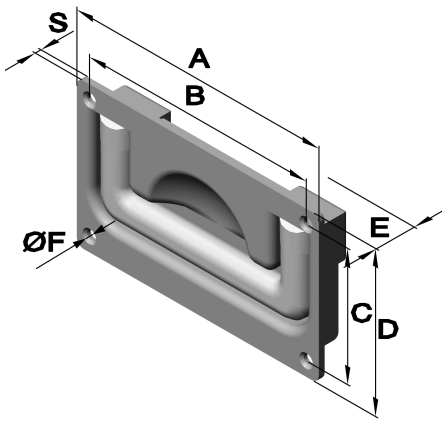

Article no.		Dimensions in mm						
Series	Material Raw Aluminium	A	B	C	D	E	ØF	S
6440	.70	105	94	51,5	63,5	17,5	4,5x90°	2,5

Art. no.: 6442 (drilled and countersunk)
delivered in parts

Maximum load: max. 100 kg /pair
Opening angle: up to 90°
Installation opening: 110 x 70

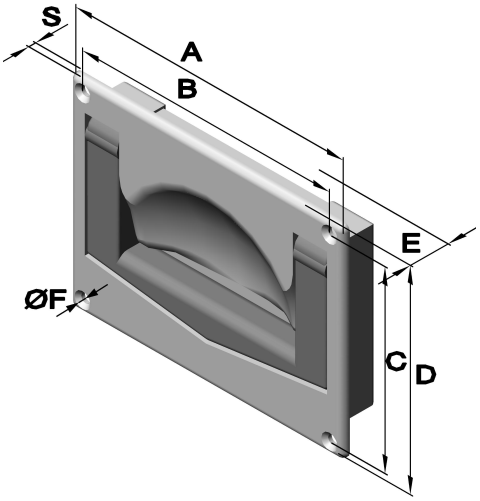

Article no.		Dimensions in mm						
Series	Material Raw Aluminium	A	B	C	D	E	ØF	S
6442	.70	120	108	79	91	20	4,5x90°	2,5

Art. no.: 6444 (drilled and countersunk)
delivered in parts

Maximum load: max. 100 kg /pair
Opening angle: up to 90°
Installation opening: 127 x 83

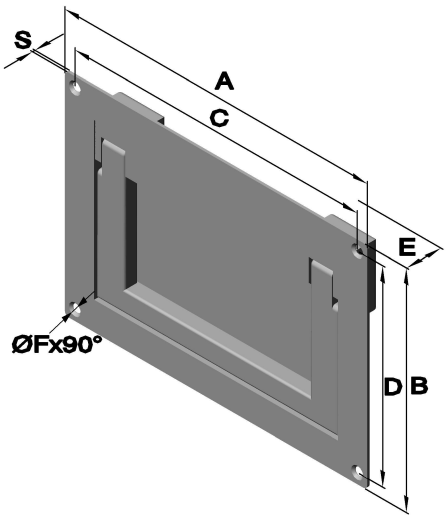

Article no.			Dimensions in mm						
Series	Execution	Material Zinc plated	A	B	C	D	E	ØF	S
6444	.34	Steel	150	105	140	95	17	4,3	1,2

Drop handles

Art. no.: 6451 (drilled and countersunk)

Maximum load: max. 100 kg /pair
Opening angle: up to 90°
Installation opening: 171 x 73

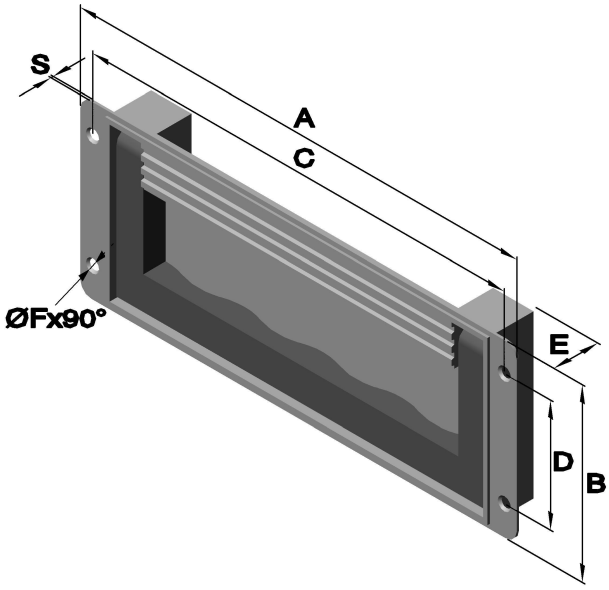

Article no.		Dimensions in mm						
Series	Material: Silver lacquered / Zamak	A	B	C	D	E	ØF	S
6451	.50	194	76	183	50	20,5	4,3	2,5

Art. no.: 6457 (drilled)

Maximum load: max. 25 kg
Opening angle: up to 80°

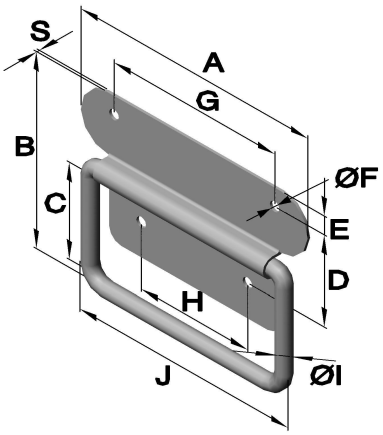

Article no.				Dimensions in mm										
Series	Execution	Material: Raw (Steel)	Material: Zinc plated (Steel)	A	B	C	D	E	ØF	G	H	ØI	J	S
6457	.01	.00	-	96	61	37	-	-	-	-	-	6	88	1
6457	.02	-	.04	96	61	37	34	7	4	68	45	6	88	1

Art. no.: 6457 (drilled)

Maximum load: max. 25 kg
Opening angle: up to 80°

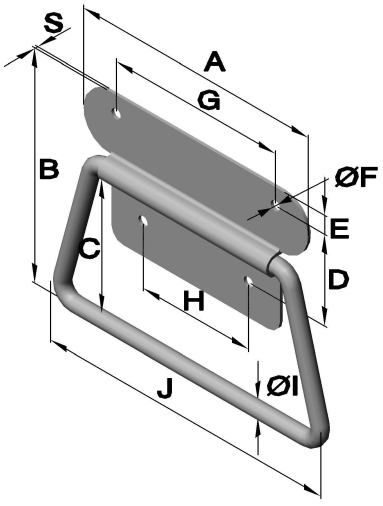

Article no.				Dimensions in mm										
Series	Execution	Material: Raw (Steel)	Material: Zinc plated (Steel)	A	B	C	D	E	ØF	G	H	ØI	J	S
6457	.03	.00	-	96	71	51	-	-	-	-	-	6	102	1
6457	.03	-	.04	96	71	51	34	7	4	68	45	6	102	1

TÜVRheinland ZERTIFIZIERT Management System ISO 9001:2015 ISO 14001:2015 www.tuv.com ID 9108624624

Further materials and surface finishes on demand. We will be pleased to give you advice.
Phone: +49 (0) 231 / 725 790 -0 eMail: info@hokon-verschlusstechnik.de
Fax: +49 (0) 231 / 725 790 -10 Homepage: www.hokon-verschlusstechnik.de

Drop handles

Art. no.: 6457 (drilled)

Maximum load: max. 60 kg
Opening angle: up to 80°

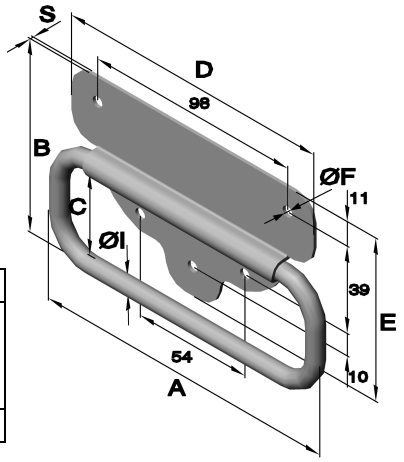

Article no.				Dimensions in mm							
Series	Execution	Material		A	B	C	D	E	ØF	ØI	S
		Raw	Zinc plated								
		Steel	Steel								
6457	.04	.00	.04	140	87	38	125	73	5	8	1,5

Art. no.: 6457 (drilled)

Maximum load: max. 60 kg
Opening angle: up to 80°

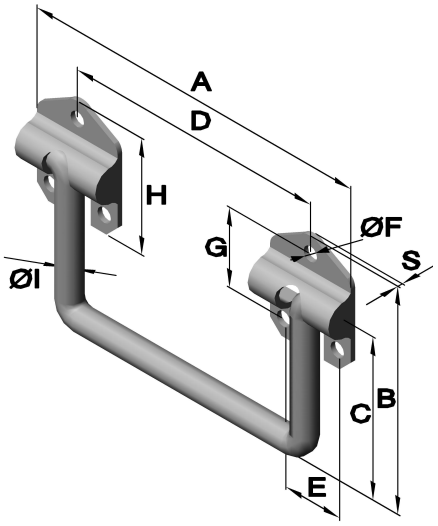

Article no.			Dimensions in mm									
Series	Execution	Material	A	B	C	D	E	ØF	G	H	ØI	S
		Zinc plated										
		Steel										
6457	.05	.04	141	85	62	105	24	6	32	47	10	3

Art. no.: 6460 (drilled and countersunk)

Opening angle: up to 90°

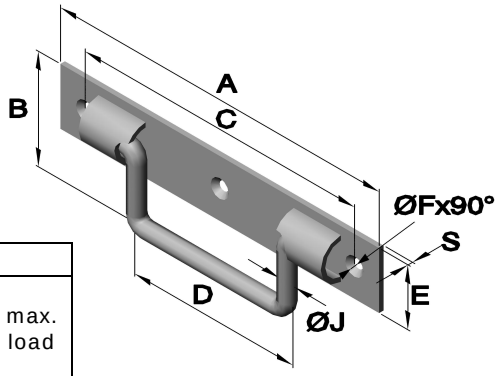

Article no.				Dimensions in mm								
Series	Execution	Material		A	B	C	D	E	ØF	ØJ	S	max. load
		1.1203	Zinc plated									
		Steel	Steel									
6460	.01	.00	-	142	44,5	120	74	25	5,2	7	2	35kg
6460	.02	.00	-	160	49,6	138	93,5	25	5,2	8	2	35kg
6460	.03	.00	-	187	49,6	162	109	25	5,2	8	2	35kg
6460	.04	-	.04	142	44,5	120	74	25	5,2	7	2	45kg
6460	.05	-	.04	160	49,6	138	93,5	25	5,2	8	2	45kg
6460	.07	-	.04	187	49,6	162	109	25	5,2	8	2	45kg

Drop handles

Art. no.: 6460 (drilled and countersunk)

Maximum load: max. 35 kg
Opening angle: up to 90°

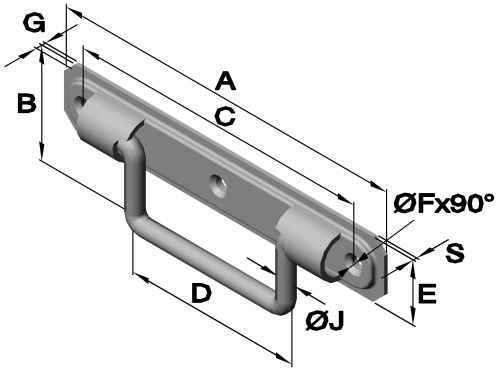

Article no.			Dimensions in mm								
Series	Execution	Material: Raw / Stainless steel	A	B	C	D	E	ØF	G	ØJ	S
6460	.06	.30	160	54	130	89	30	5,2	4	7	1,5

Art. no.: 100.H1030 (drilled)

Opening angle: up to 90°

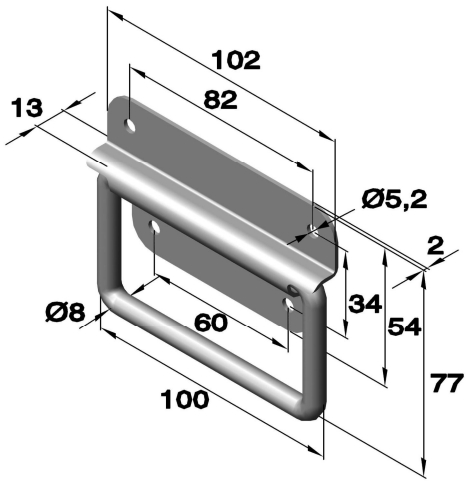

Article no.	
Series	Material: Zinc plated / Steel
100.H1030	.04

Art. no.: 100.H1030R (drilled)

Opening angle: up to 90°

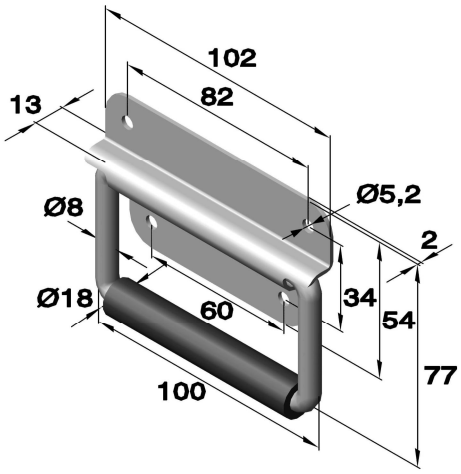

Article no.	
Series	Material: Zinc plated / Steel
100.H1030R	.04

TÜVRheinland ZERTIFIZIERT Management System ISO 9001:2015 ISO 14001:2015 www.tuv.com ID 9108624624

Further materials and surface finishes on demand. We will be pleased to give you advice.
Phone: +49 (0) 231 / 725 790 -0 eMail: info@hokon-verschlusstechnik.de
Fax: +49 (0) 231 / 725 790 -10 Homepage: www.hokon-verschlusstechnik.de

Drop handles

Art. no.: 100.H1079 (drilled)

Opening angle: up to 90°

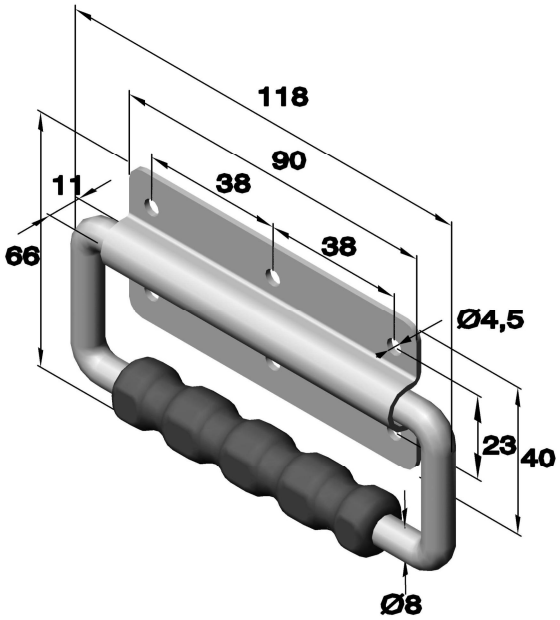

Article no.	
Series	Material
	Raw
100.H1079	Aluminium

Art. no.: 100.HE-2457 (drilled)

Opening angle: up to 90°

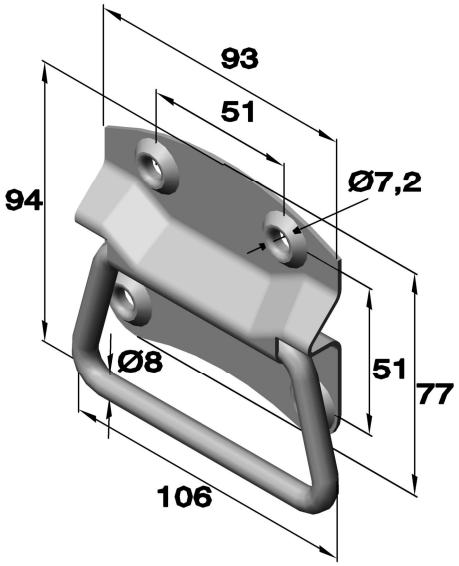

Article no.	
Series	Material
	Zinc plated
	Steel
100.HE-2457	.04

Drop handles

Box handles

with return spring



Art.:3103



Art.:6401



Art.:6402



Art.:3510



Art.:6403.04



Art.:6403.05



Art.:6405



Art.:6415



Art.:6419

Box handles

with return spring



Art.:100.H1033Z

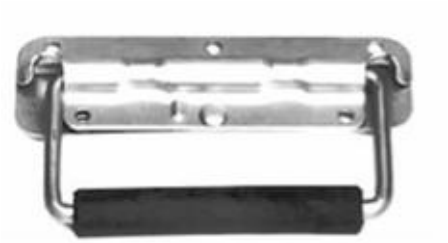

Art.:100.H10527



Art.:100.H1078



Art.:100.HE-2341AL



Art.:100.H8154

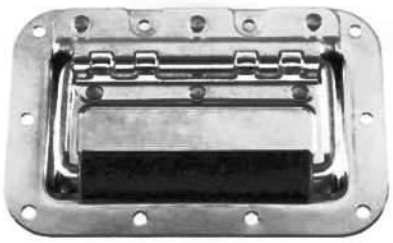

Art.:100.H1054



Art.:100.H2751

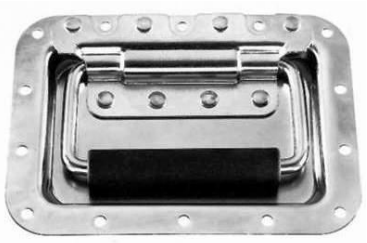

Art.:100.H1065



Art.:100.H7148

TÜVRheinland ZERTIFIZIERT
Management System
ISO 9001:2015
ISO 14001:2015
www.tuv.com
ID 9108624624

Futher materials and surface finishes on demand. We will be pleased to give you advice.
Phone: +49 (0) 231 / 725 790 -0 eMail: info@hokon-verschlusstechnik.de
Fax: +49 (0) 231 / 725 790 -10 Homepage: www.hokon-verschlusstechnik.de

Box handles
with return spring

Art. no.: 3103 (drilled and countersunk)
with **return spring**

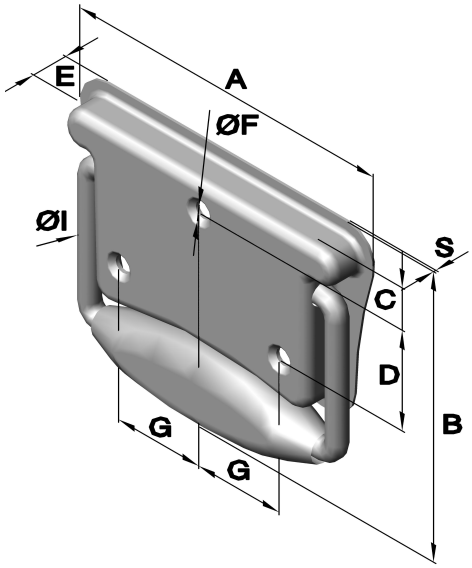

Article no.		Dimensions in mm								
Series	Material / Zinc plated / Steel	A	B	C	D	E	ØF	G	ØI	S
3103	.04	128	90	16	38	14	6,4	35	8	1,5

Art. no.: 3112 (drilled)
with **return spring**

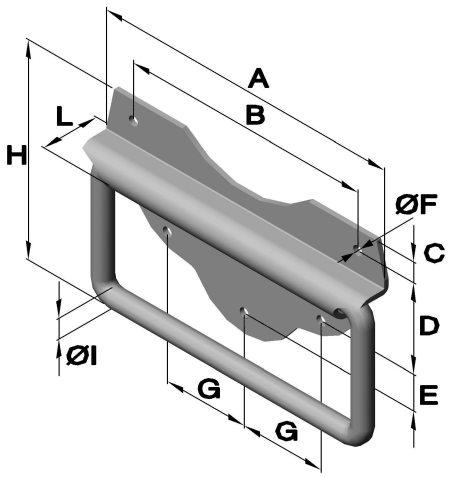

Article no.		Dimensions in mm									
Series	Material / Zinc plated / Steel	A	B	C	D	E	ØF	G	H	ØI	L
3112	.04	123	98	8	35	14	4	34	74	8	14,5

Art. no.: 3510 (drilled)
with **return spring**

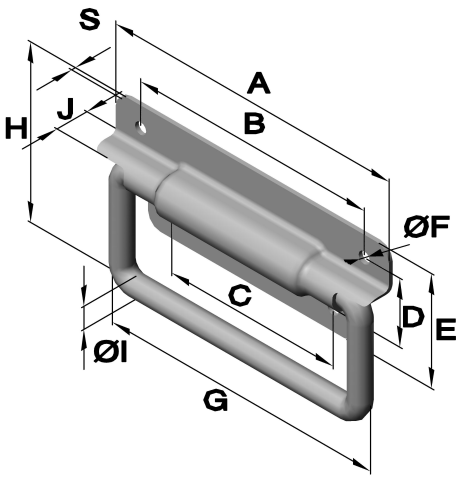

Article no.		Dimensions in mm										
Series	Material / Zinc plated / Steel	A	B	C	D	E	ØF	G	H	ØI	J	S
3510	F.04	110	90	65	25	40	5	100	63	6	13	1,5

Box handes
with return spring

Art. no.: 6401 (drilled)
with return spring

Maximum load: ca. 57 kg

Opening angle: up to 90°

Installation opening: 79 x 132

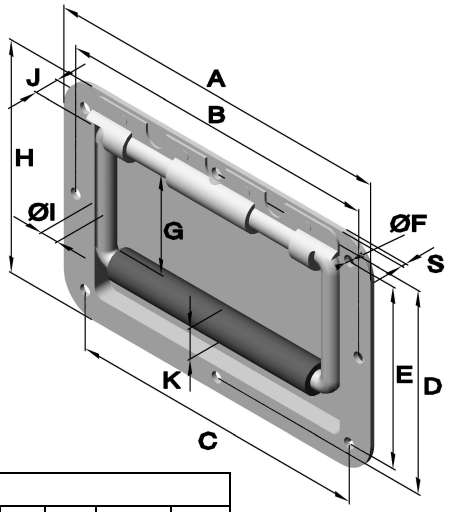

Article no.			Dimensions in mm											
Series	Execution	Material	A	B	C	D	E	ØF	G	H	ØI	J	K	S
		Steel												
6401	-	.04	155,5	142,7	133,3	84,1	73,4	5	46	101,6	8	11	13,5	1,6

Art. no.: 6402 (drilled)
with return spring

Maximum load: ca. 67 kg

Opening angle: up to 90°

Installation opening: 99 x 146

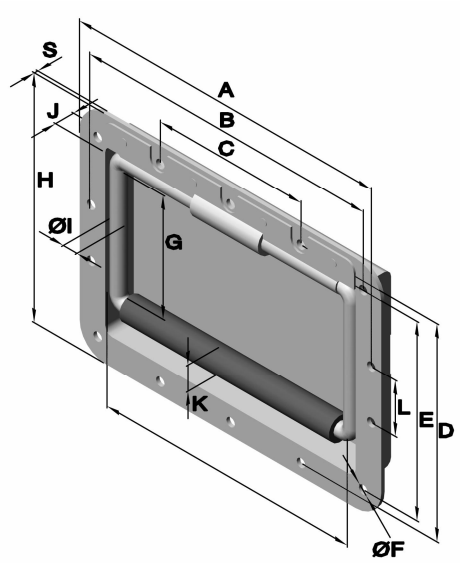

Article no.			Dimensions in mm												
Series	Material		A	B	C	D	E	Ø F	G	H	Ø I	J	K	L	S
	Zinc plated	Epoxy black coated													
	Steel	Steel													
6402	.04	.07	177,8	155,6	82,6	113,5	103,9	5	62	127	8	19,8	13,5	34,9	1,6

TÜVRheinland ZERTIFIZIERT
Management System ISO 9001:2015 ISO 14001:2015
www.tuv.com ID 9108624624

Futher materials and surface finishes on demand. We will be pleased to give you advice.
Phone: +49 (0) 231 / 725 790 -0 eMail: info@hokon-verschlusstechnik.de
Fax: +49 (0) 231 / 725 790 -10 Homepage: www.hokon-verschlusstechnik.de

Box handles
with return springs

Art. no.: 6403 (drilled)
with return spring

Maximum load: ca. 45 kg
Opening angle: up to 90°

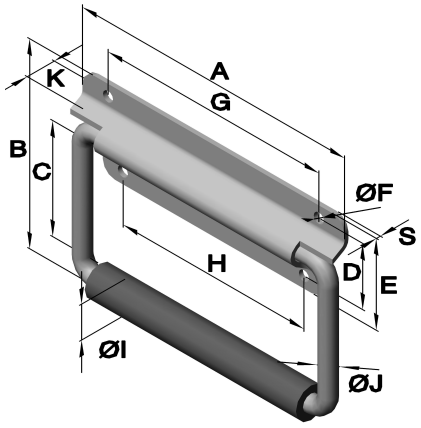

Article no.				Dimensions in mm											
Series	Execution	Material: Zinc plated / Steel	Material: 1.4301 / Steel	A	B	C	D	E	ØF	G	H	ØI	ØJ	K	S
6403	.05	.04	.30	130,3	104,1	60,4	28,6	41,9	5	104,8	88,9	15	7,8	12,7	2
6403	.06	.04	.30	130,3	82,6	38,1	28,6	39,6	5	104,8	88,9	15	7,8	12,7	2

Art. no.: 6405 (drilled)
with return spring

Maximum load: ca. 25 kg

Opening angle: up to 70°

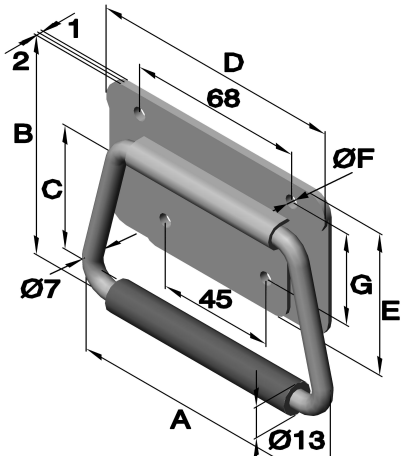

Article no.			Dimensions in mm						
Series	Execution	Material: Steel	A	B	C	D	E	ØF	G
6405	.08	Yellow chromated	110	87	50,5	98	55	5	35,5

Art. no.: 6419 (drilled)
with return spring

Maximum load: ca. 34 kg

Opening angle: up to 180°

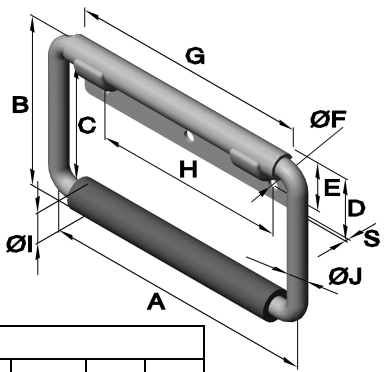

Article no.				Dimensions in mm										
Series	Execution	Material: Blued / Steel	Material: Passivated / Stainless steel	A	B	C	D	E	ØF	G	H	ØI	ØJ	S
6419	.01	.07	.30	130	75,4	46	27,7	21,4	5	106,7	85,8	13,5	7,8	1,5

Box handes
with return spring

Art. no.: 6415 (drilled)
with return spring
and neoprene sheathing

Maximum load:
Art. no.: 6415.01.30 : ca. 54 kg
Art. no.: 6415.02.04 : ca. 68 kg
Art. no.: 6415.03.04 : ca. 68 kg

Opening angle: up to 90°

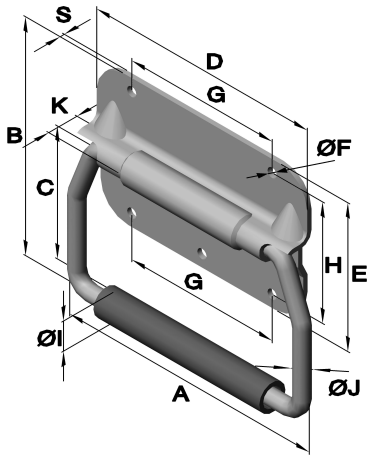

Article no.				Dimensions in mm											
Series	Execution	Material		A	B	C	D	E	ØF	G	H	ØI	ØJ	K	S
		Zinc plated	Raw												
		Steel	Stainless steel												
6415	.01	-	.30	130	112,7	50,8	120,6	69,8	5	76,2	57,1	14,2	7,8	16,8	2,3
6415	.02	.04	-	130	101,6	50,8	124	50,8	5	66,6	38,1	14,2	7,8	17,5	2,3
6415	.03	.04	-	130	104,1	50,8	124	50,8	5	66,6	38,1	19	7,8	17,5	2,3

Art. no.: 100.H1033Z (drilled)
with return spring
and rubber hose

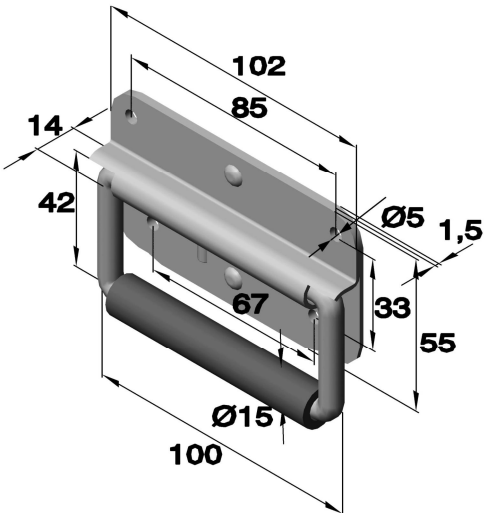

Article no.	
Series	Material
	Zinc plated
	Steel
100.H1033Z	.04

Art. no.: 100.HE-2341 (drilled)
with return spring

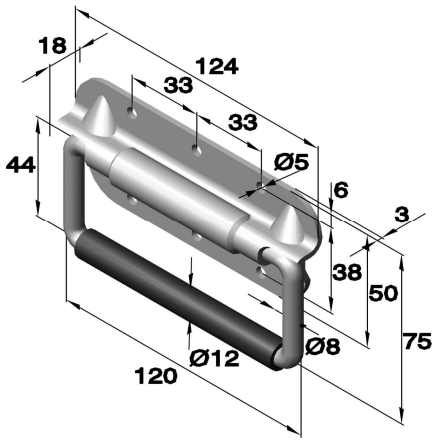

Article no.	
Series	Material
	Raw
	aluminium
100.HE-2341	AL

TÜVRheinland ZERTIFIZIERT Management System ISO 9001:2015 ISO 14001:2015 www.tuv.com ID 9108624624

Futher materials and surface finishes on demand. We will be pleased to give you advice.
Phone: +49 (0) 231 / 725 790 -0 eMail: info@hokon-verschlusstechnik.de
Fax: +49 (0) 231 / 725 790 -10 Homepage: www.hokon-verschlusstechnik.de

Box handles
with return springs

Art. no.: 100.H10527 (drilled)
with return spring

Article no.	
Series	Material
	Zinc plated
	Steel
100.H10527	.04

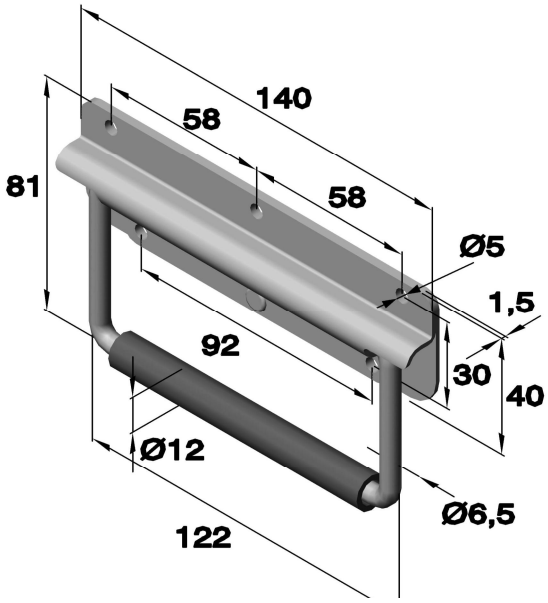

Art. no.: 100.H1053z (drilled)
with return spring

Article no.		
Series	Material	
	Zinc plated	Blued black
	Steel	Steel
100.H1053z	.04	.07

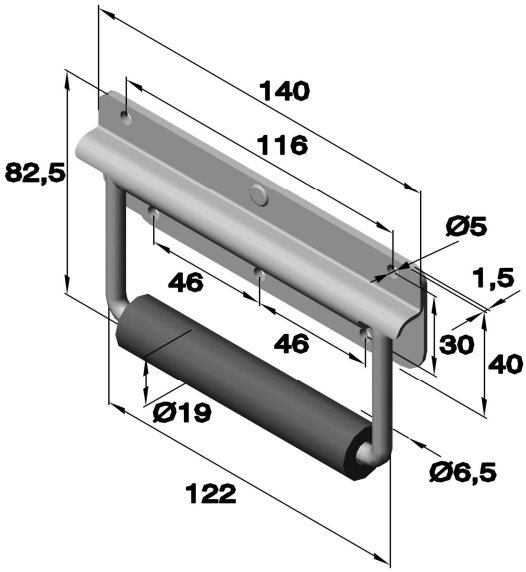

Art. no.: 100.H1078
with return spring

Article no.	
Series	Material
	Zinc plated
	Steel
100.H1078	.04

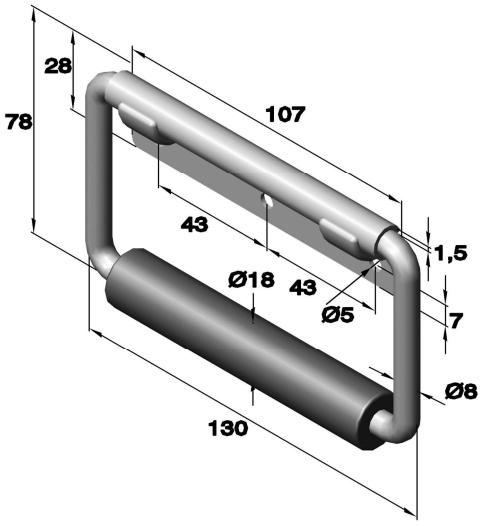

Box handes
with return spring

Art. no.: 100.H1050 (drilled)
with return spring

Installation opening: 75 x 128

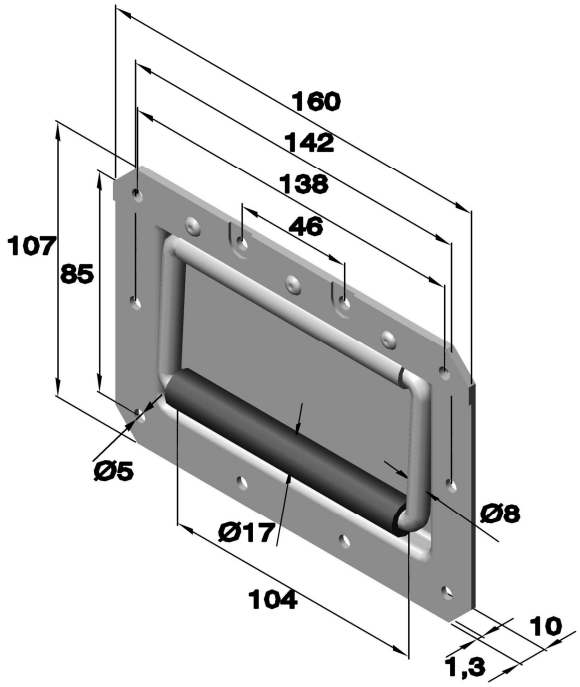

Article no.		
Series	Material	
	Zinc plated	blued black
	Steel	Steel
100.H1050	.04	.07

Art. no.: 100.H1065 (drilled)
Art. no.: 100.H7165-10 (drilled)
with return spring

Installation opening: 148 x 98

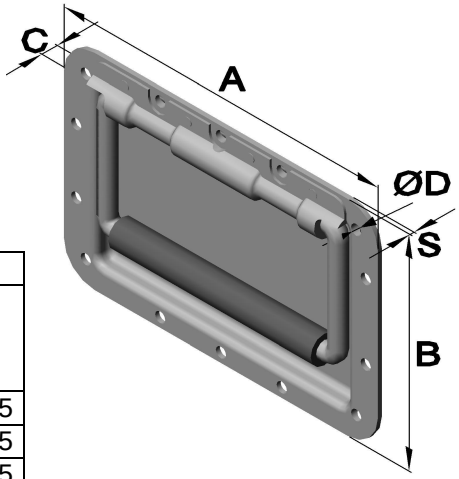

Article no.				Dimensions in mm				
Series	material			A	B	C	Ø D	S
	Zinc plated	Blued black	Raw					
	Steel	Steel	Stainless steel					
100.H1065S	-	-	.30	178	127	15,5	5	1,5
100.H7165-10	.04	.07	-	178	127	11,5	5,2	1,5
100.H7165	Z.04	K.07	-	178	127	15,5	5,2	1,5

Art. no.: 100.H7149 (drilled)
Art. no.: 100.H7151 (drilled)
Art. no.: 100.H7159 (drilled)
with return spring

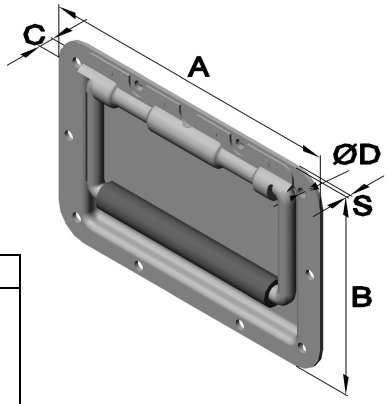

Article no.					Dimensions in mm				
Series	Material				A	B	C	Ø D	ØI
	Chromated	Zinc plated	Black blued	Raw					
	Steel	Steel	Steel	Stainless steel					
100.H7149	-	.04	-	-	160	107	15	5	19
100.H7151	c.03	z.04	-	s.30	160	107	9,5	5	15,5
100.H7159	-	z.04	K.07	-	160	107	8,5	-	19

TÜVRheinland ZERTIFIZIERT Management System ISO 9001:2015 ISO 14001:2015 www.tuv.com ID 9108624624

Futher materials and surface finishes on demand. We will be pleased to give you advice.

Phone: +49 (0) 231 / 725 790 -0
Fax: +49 (0) 231 / 725 790 -10
eMail: info@hokon-verschlusstechnik.de
Homepage: www.hokon-verschlusstechnik.de

Box handles
with return springs

Art. no.: 100.H1085
perforated rivet plate, to
Art. no.: 100.H1050
Art. no.: 100.H7151
Art. no.: 100.H7159

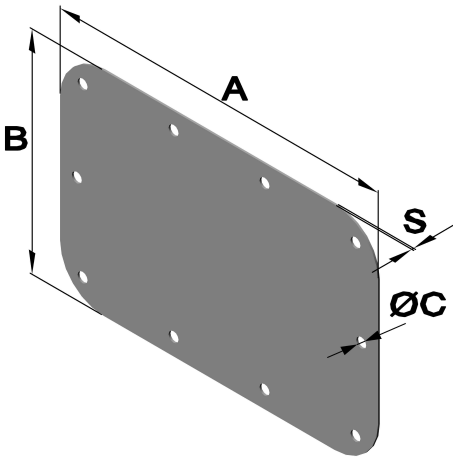

Article no.			Dimensions in mm			
Series	Material		A	B	ØC	S
	Zinc plated	Blued black				
	Steel	Steel				
100.H1085	.04	.07	160	107	5	0,9

Art. no.: 100.H1906
Perforated riveted plate, to
Art. no.: 100.H1050
Art. no.: 100.H7151
Art. no.: 100.H7159

Art. no.: 100.H1065/BP
Perforated rivet plate, to
Art. no.: 100.H1065
Art. no.: 100.H7165
Art. no.: 100.H7159

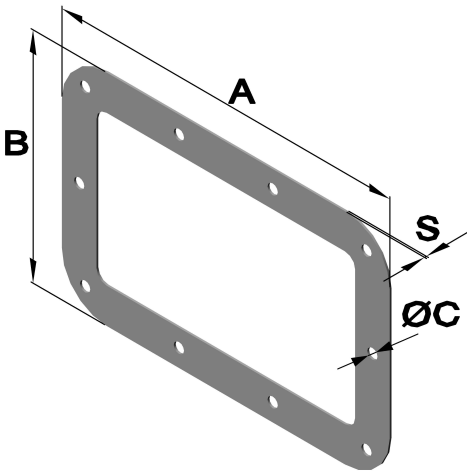

Article no.			Dimensions in mm			
Series	Material		A	B	Ø C	S
	Zinc plated	Blued black				
	Steel	Steel				
100.H1906	.04	.07	160	107,2	5	0,9
100.H1065/BP	.04	-	178	127	5	0,9

Art. no.: 100.H2751 (drilled)
with return spring

Installation opening: 130 x 75

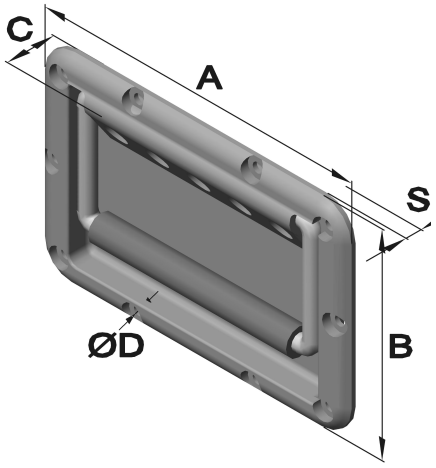

Article no.		Dimensions in mm				
Series	Material	A	B	C	ØD	S
	Black					
	ABS					
100.H2751	K.07	162	108	9	5,2	10

Box handes
with return spring

Art. no.: 100.H7148 (drilled)
with return spring

Installation opening: 130 x 55

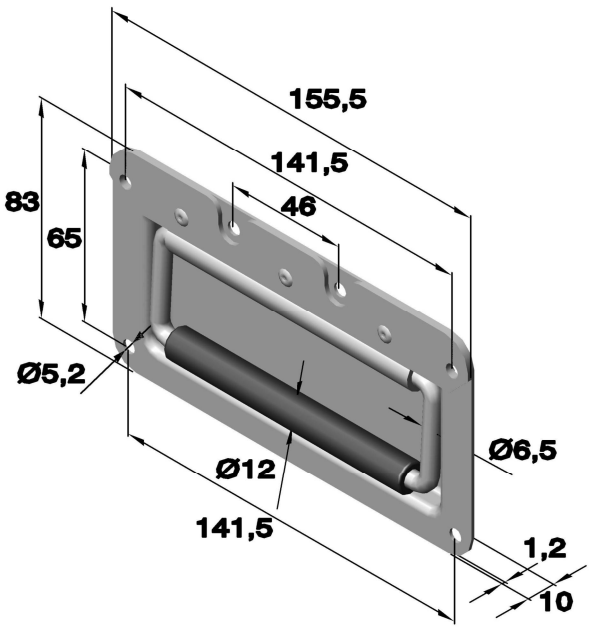

Article no.	
Series	Material
	Zinc plated
	Steel
100.H7148	.04

Art. no.: 100.H8154 (drilled)
with return spring

Installation opening: 130 x 75

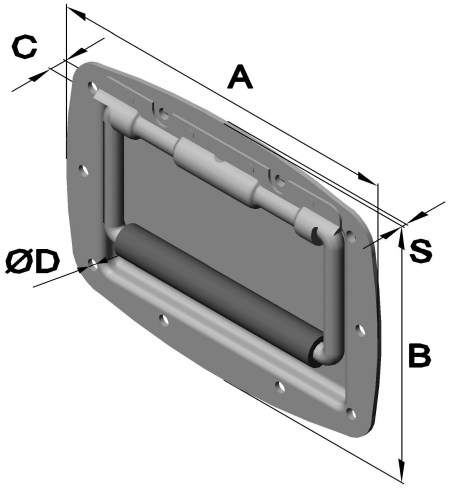

Article no.		Dimensions in mm					
Series	Material Zinc plated Steel	A	B	C	ØD	ØI	S
100.H8154	.04	170	114	9,5	5	19	1,5

TÜVRheinland ZERTIFIZIERT Management System ISO 9001:2015 ISO 14001:2015 www.tuv.com ID 9108624624

Futher materials and surface finishes on demand. We will be pleased to give you advice.
Phone: +49 (0) 231 / 725 790 -0 eMail: info@hokon-verschlusstechnik.de
Fax: +49 (0) 231 / 725 790 -10 Homepage: www.hokon-verschlusstechnik.de

Pull handles














Pull handles

Art. no.: 1053 (drilled and countersunk)

Cold-formed hollow handle,

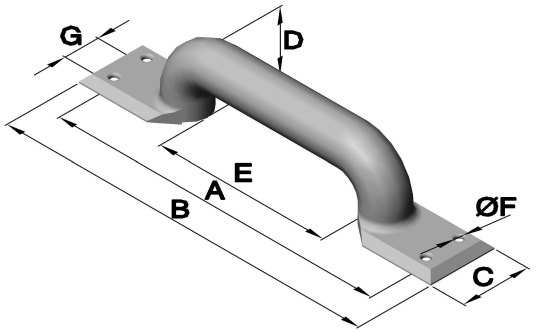

Article no.			Dimensions in mm						
Series	Execution	Material: Nickel plated / Steel	A	B	C	D	E	Ø F	G
1053	.08	.01	66	80	18,5	13	38	3,2	-
1053	.10	.01	83	100	21,5	13	48	3,2	-
1053	.12	.01	99	120	24,5	16	60	3,2	-
1053	.14	.01	121	140	28,5	19	70	3,2	13
1053	.16	.01	140	160	29,5	24	80	3,2	13

Art. no.: 3104/3105

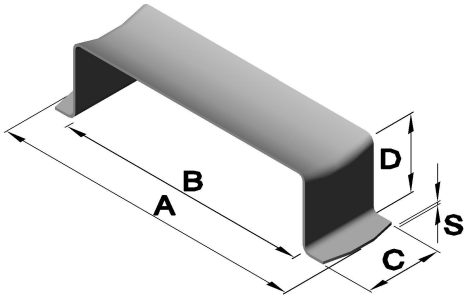

Article no.				Dimensions in mm				
Series	Material: Raw	Material: Zinc plated	Material: Raw	A	B	C	D	E
	Steel	Steel	Stainless steel					
3104	.00	.04	.30	120	96	29	29	1
3105	-	.04	-	96	73	29	28	1

Art. no.: 6408 (drilled and countersunk)

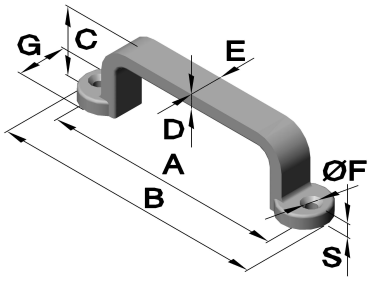

Article no.		Dimensions in mm							
Series	Material: Polished / Stainless steel	A	B	C	D	E	Ø F	G	S
6408	.33	88	100	25	5,5	10	4,1°	18	5

Art. no.: 6409 (drilled)

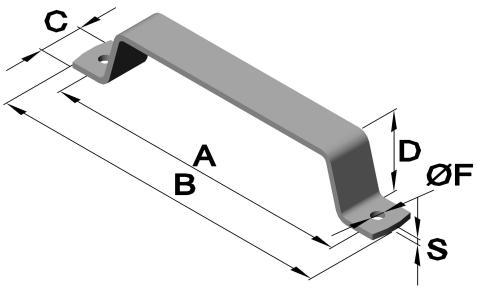

Article no.			Dimensions in mm					
Series	Material: Zinc plated / Steel	Material: 1.4301 / deburred	A	B	C	D	Ø F	S
6409	.04	.30	107	120	15	21	4,3	2

TÜVRheinland ZERTIFIZIERT Management System ISO 9001:2015 ISO 14001:2015 www.tuv.com ID 9108624624

Further materials and surface finishes on demand. We will be pleased to give you advice.
Phone: +49 (0) 231 / 725 790 -0 eMail: info@hokon-verschlusstechnik.de
Fax: +49 (0) 231 / 725 790 -10 Homepage: www.hokon-verschlusstechnik.de

Pull handles

Art. no.: 6410 (drilled and countersunk)

Article no.			Dimensions in mm								
Series	Execution	Material Polished / Stainless steel	A	B	C	D	E	Ø F	G	H	S
6410	.01	.33	106	120	24	7	12	4,1	24	27	5
6410	.02	.33	126	150	30	8	15	5,3	30	33	6

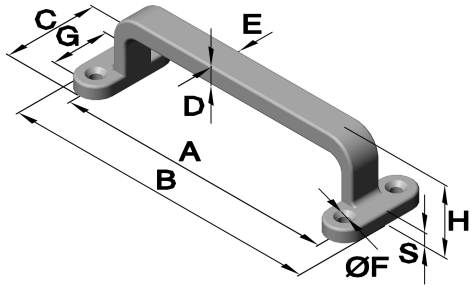

Art. no.: 6411 (with internal thread)

Article no.					Dimensions in mm					
Series	Execution	Material: Nickel plated (Brass)	Material: Chromated (Brass)	Material: Anodised (Aluminium)	A	B	C	Ø D	M	Thread length
6411	.01	-	-	.70	52	60	34	8	M4	10
6411	.02	-	-	.70	80	88	34	8	M4	12
6411	.03	-	-	.70	100	108	34	8	M4	12
6411	.04	-	-	.70	120	128	34	8	M4	10
6411	.05	-	-	.70	100	108	30	7	M4	8
6411	.01	.21	.23	-	100	108	30	7	M4	8

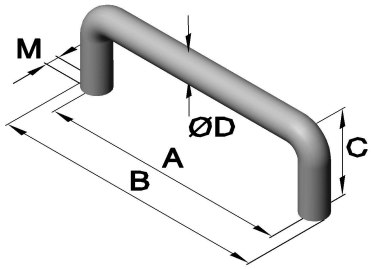

Art. no.: 6412 (with internal thread)

Article no.				Dimensions in mm					
Series	Execution	Material: Chromated Steel	Material: Raw Stainless steel	A	B	C	Ø D	M	Thread length
6412	.01	.03	-	102	110	38	8	M5	14
6412	.02	.03	-	153	161	38	8	M5	14
6412	.03	.03	-	204	212	38	8	M5	14
6412	.01	-	.30	150	159	28	9	M4	8
6412	.02	-	.30	120	129	28	9	M4	8
6412	.03	-	.30	95	104	28	9	M4	8

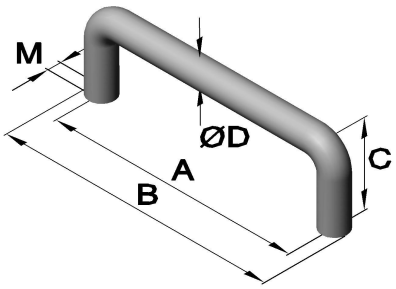

Art. no.: 6412 (with internal thread)

Article no.			Dimensions in mm					
Series	Execution	Material Polished / Stainless steel	A	B	C	D	M	Thread length
6412	.01	.35	92	99,8	32	7,8	M5	10
6412	.02	.35	110	117,8	32	7,8	M5	10
6412	.04	.30	100	108	40	8	M5	11
6412	.05	.30	150	158	50	8	M5	11
6412	.06	.30	200	208	50	8	M5	11

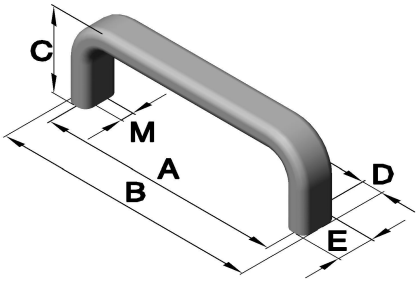

Pull handles

Art. no.: 6412 for

Art. no.: 6412.01.03
Art. no.: 6412.02.03
Art. no.: 6412.03.03

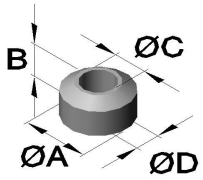

Article no.			Dimensions in mm			
Series	Execution	Material Chromated Brass	Ø A	B	Ø C	Ø D
6412	.01	.23	16	8	8,2	6

Art. no.: 6413

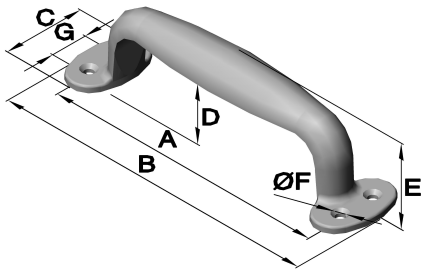

Article no.				Dimensions in mm						
Series	Execution	Material Raw	Material Nickel plated	A	B	C	D	E	Ø F	G
6413	.02	.00	.01	137	158	36	26	53	5*90°	20

Art. no.: 6416

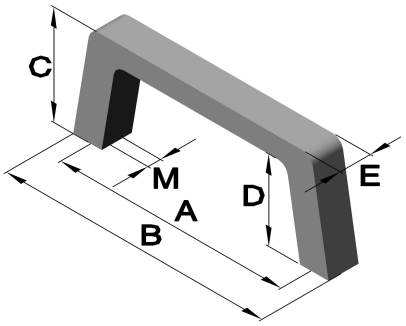

Article no.			Dimensions in mm						
Series	Execution	Material Black Aluminium	A	B	C	D	E	M	Thread length
6416	.01	.70	88	102	40	32	12,2	M5	10
6416	.02	.70	120	134	40	32	12,2	M5	10

Art. no.: 6417

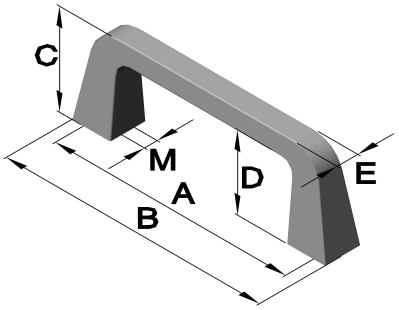

Article no.			Dimensions in mm						
Series	Execution	Material Chromated Zamak	A	B	C	D	E	M	Thread length
6417	.01	.53	90	99	33	26	8	M4	8

TÜVRheinland ZERTIFIZIERT Management System ISO 9001:2015 ISO 14001:2015 www.tuv.com ID 9108624624

Further materials and surface finishes on demand. We will be pleased to give you advice.
Phone: +49 (0) 231 / 725 790 -0 eMail: info@hokon-verschlusstechnik.de
Fax: +49 (0) 231 / 725 790 -10 Homepage: www.hokon-verschlusstechnik.de

Pull handles

Art. no.: 6417 (with internal thread)

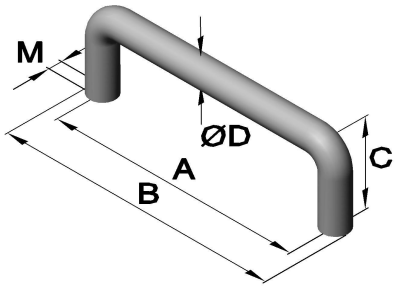

Article no.			Dimensions in mm					
Series	Execution	Material Polished Aluminium	A	B	C	Ø D	M	Thread length
6417	.01	.70	92	102	32	10	M5	10
6417	.02	.70	108	118	39	10	M4	10

Art. no.: 6418 (with internal thread)

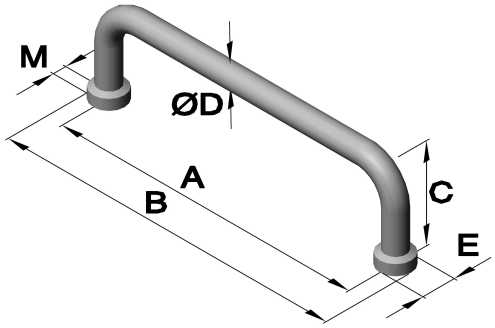

Article no.			Dimensions in mm						
Series	Execution	Material Polished Stainless steel	A	B	C	Ø D	E	M	Thread length
6418	.01	.30	110	122	35	8	12	M5	11

Art. no.: 6418 (with external thread)

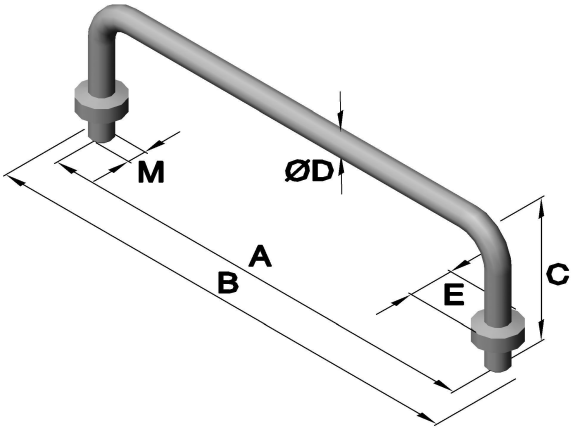

Article no.			Dimensions in mm						
Series	Execution	Material Chromated Brass	A	B	C	Ø D	E	M	Thread length
6418	.01	.23	160	176	50	8	16	M8	10

Art. no.: 6418 (with internal thread)

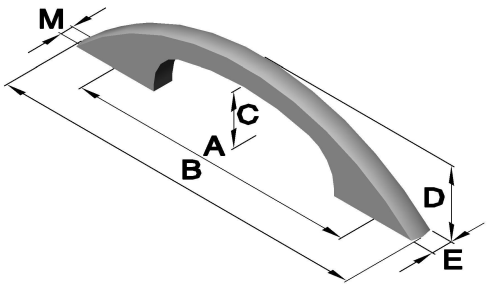

Article no.			Dimensions in mm						
Series	Execution	Material Chromated Zamak	A	B	C	D	E	M	Thread length
6418	.01	.53	111	145	21	29	8	M4	5

Pull handles

Art. no.: 6418 (with internal thread)

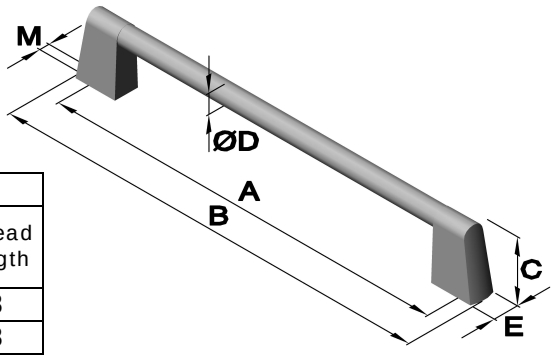

Article no.				Dimensions in mm						
Series	Execution	Material		A	B	C	Ø D	E	M	Thread length
		Black Zamak	Chromated Zamak							
6418	.01	.50	-	160	174	26	8	10	M4	8
6418	.02	-	.53	160	174	26	8	10	M4	8

Art. no.: 6420 (drilled and countersunk)

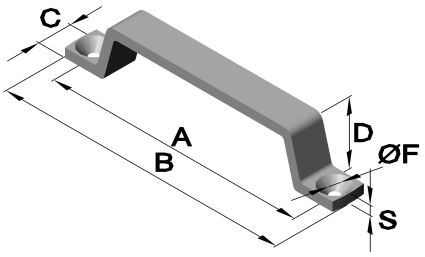

Article no.			Dimensions in mm					
Series	Execution	Material	A	B	C	D	Ø F	S
6420	.03	Chromated Zamak	107	120	14	22	4,3*90°	4

Art. no.: 6420 (drilled)

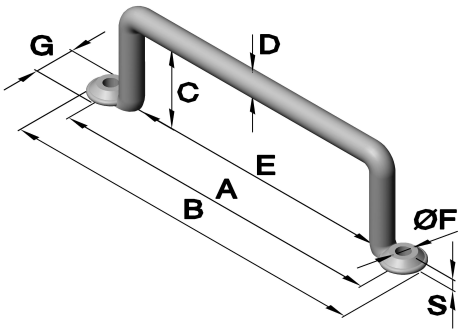

Article no.			Dimensions in mm							
Series	Execution	Material Zinc plated Steel	A	B	C	D	E	Ø F	G	S
6420	.10	.02	125	140	30	8	85	5,1	16	3

Art. no.: 6445

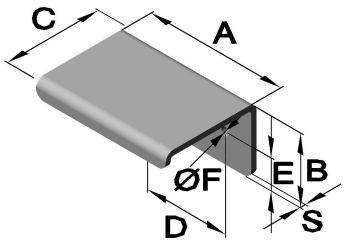

Article no.			Dimensions in mm						
Series	Execution	Material	A	B	C	D	E	Ø F	S
6445	.03	Chromated	50	25	35	30	11	4,2*90°	2

TÜVRheinland ZERTIFIZIERT Management System ISO 9001:2015 ISO 14001:2015 www.tuv.com ID 9108624624

Further materials and surface finishes on demand. We will be pleased to give you advice.
Phone: +49 (0) 231 / 725 790 -0 eMail: info@hokon-verschlusstechnik.de
Fax: +49 (0) 231 / 725 790 -10 Homepage: www.hokon-verschlusstechnik.de

Pull handles

Art. no.: 7038 (with internal thread)

Article no.		Dimensions in mm					
Series	Material	A	B	C	D	E	S
7038	PA Black	162	178	26	46	36	15

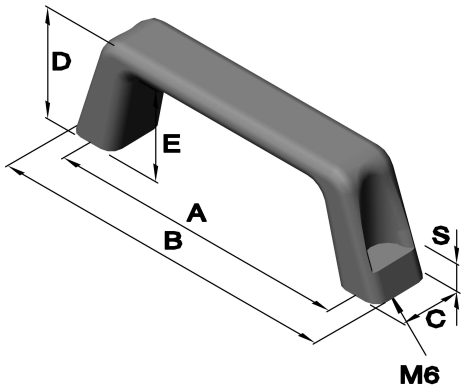

Art. no.:6420/7039(drilled and countersunk for SW 10)

Article no.			Dimensions in mm						
Series	Execution	Material	A	B	C	D	E	Ø F	S
6420	.04	PA Black	122	142	26	40	32	6,2	12
6420	.05	PA Black	150	170	28	52	42	6,2	13
7039	-	PA Black	130	149	25	40	30	6,4	10

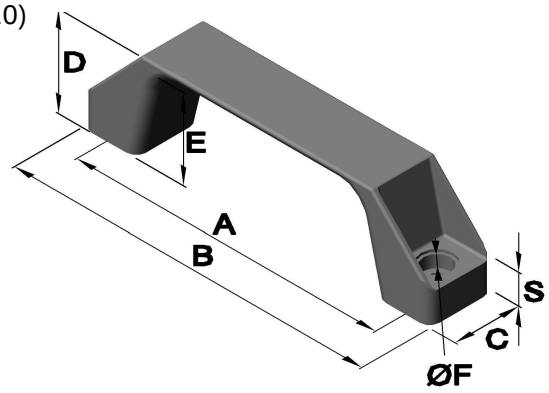

Pull handles

TÜVRheinland ZERTIFIZIERT
Management System
ISO 9001:2015
ISO 14001:2015
www.tuv.com
ID 9108624624

Further materials and surface finishes on demand. We will be pleased to give you advice.
Phone: +49 (0) 231 / 725 790 -0 eMail: info@hokon-verschlusstechnik.de
Fax: +49 (0) 231 / 725 790 -10 Homepage: www.hokon-verschlusstechnik.de

Plastic handles and shell grips









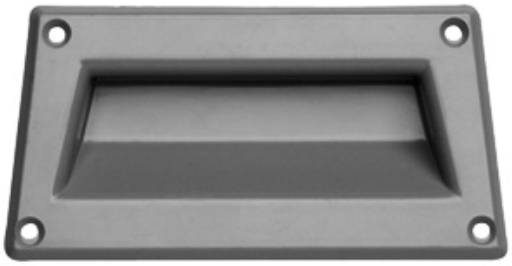



Plastic handles and shell grips

Art. no.: 6450
countersunk shell grip to clamp

For sheet thickness: 0.8 up to 1.5

Installation opening: 132 x 30.7

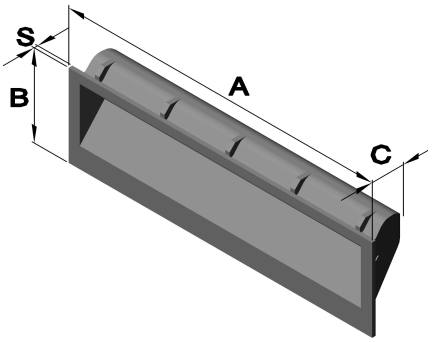

Article no.				Dimensions in mm			
Series	Execution	Material		A	B	C	S
		ABS	Polyamide				
6450	.01	.70	-	137	37,4	18,6	1,6
6450	.02	-	.80	140	36	30	2,0

Art. no.: 6500 (drilled and countersunk)
countersunk shell grip to screw

Installation opening: 73x37x83

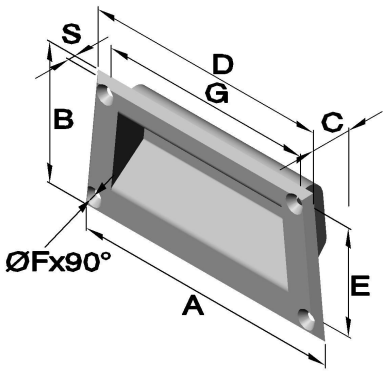

Article no.		Dimensions in mm							
Series	Material	A	B	C	D	E	Ø F	G	S
	ABS								
6500	Grey	101	52	15	91	40,5	3,5	80,5	2,5

Art. no.: 6501
countersunk shell grip to clamp

For sheet thickness: 0,75 up to 1,5

Installation opening: 34 x 83

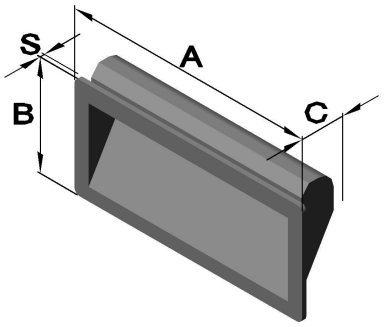

Article no.		Dimensions in mm			
Series	Material	A	B	C	S
	Polyamide				
6501	Black	90	40	16	1,6

Art. no.: 6502
countersunk shell grip to clamp

For sheet thickness: 0,75 up to 1,5

Installation opening: 49 x103

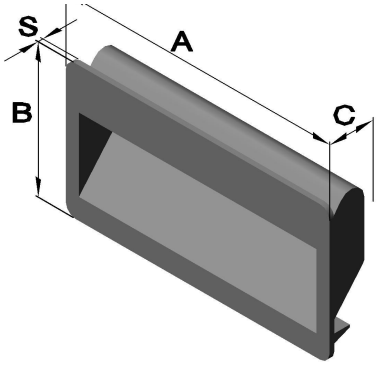

Article no.		Dimensions in mm			
Series	Material	A	B	C	S
	ABS				
6502	Black	110	56,3	18	2,8

Further materials and surface finishes on request. We will be pleased to give you advise!
Phone: +49 (0) 231 / 725 790 -0 eMail: info@hokon-verschlusstechnik.de
Fax: +49 (0) 725 790 -10 Homepage: www.hokon-verschlusstechnik.de

plastic handles and shell grips

Art. no.: 6503
countersunk shell grip to clamp

For sheet thickness: 1,5 up to 2,0

Installation opening: 73 x 171

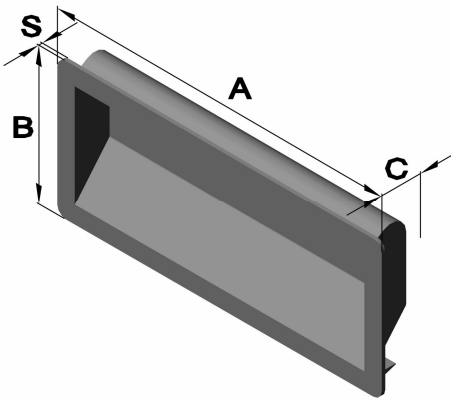

Article no.		Dimensions in mm			
Series	Material	A	B	C	S
	Plastic				
6503	Black	187	79	22	2,9

Art. no.: 6504
countersunk shell grip to clamp

For sheet thickness: 2 mm

Installation opening: 106 x 39

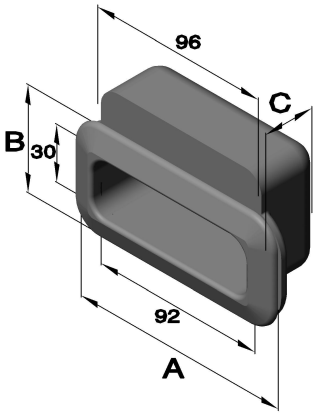

Article no.		Dimensions in mm		
Series	Material	A	B	C
	Elastomer (rubber)			
6504	Black	120	58	43

Art. no.: 6505 (drilled and countersunk)
countersunk shell grip to screw

Installation opening: 104 x 50

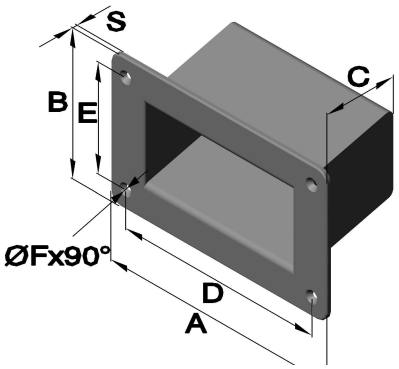

Article no.		Dimensions in mm						
Series	Material	A	B	C	D	E	Ø F	S
	ABS							
6505	Black	131	79	58	112	58,8	3,5	2,5

Art. no.: 6506
countersunk shell grip to screw
with threaded bolt

Installation opening: 90 x 47

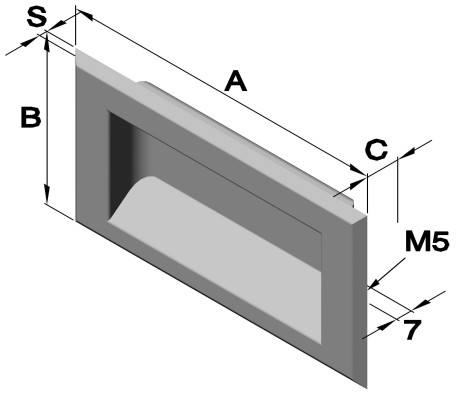

Article no.			Dimensions in mm			
Series	Execution	Material	A	B	C	S
		1.4301				
		Satined				
6506	.02	.30	120	62	16	3

Plastic handles and shell grips

Art. no.: 6507 (with threaded bolt)
countersunk shell grip to screw

Installation opening: 91 x 45

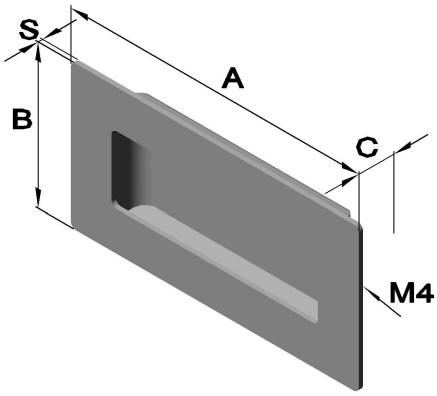

Article no.		Dimensions in mm			
Series	Material Satined Stainless steel	A	B	C	S
6507	.30	120	60	15	1,8

Art. no.: 6508 (drilled and countersunk)
countersunk shell grip to screw

Installation opening: 104 x 50

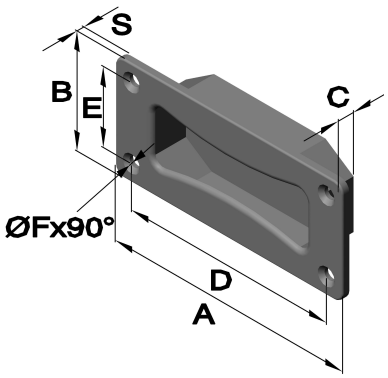

Article no.		dimensions in mm					
Series	Material Polyamide	A	B	C	D	E	Ø F
6508	Black	133	60	22	114	41	6

Art. no.: 7038 (with internal thread)

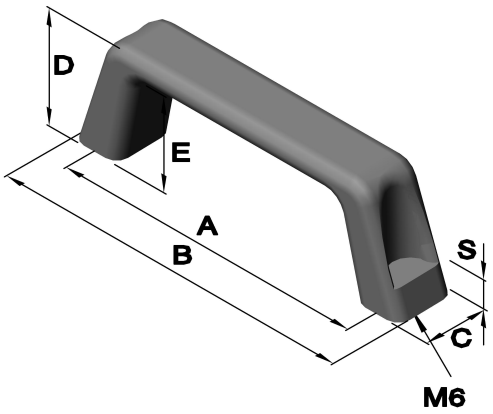

Article no.		Dimensions in mm					
Series	Material	A	B	C	D	E	S
7038	PA Black	161	178	26	46	37	15

Art. no.: 7039 (drilled and countersunk for SW 10)

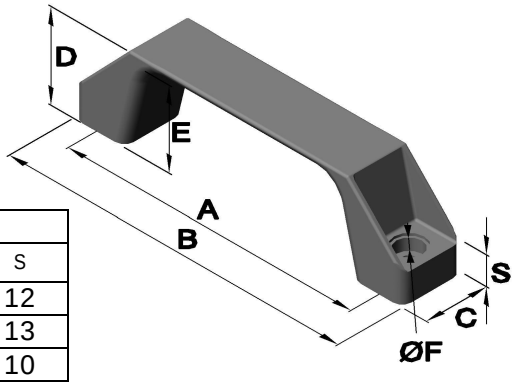

Article no.			Dimensions in mm						
Series	Execution	Material	A	B	C	D	E	Ø F	S
6420	.04	PA Black	122	142	26	40	32	6,2	12
6420	.05	PA Black	150	170	28	52	42	6,2	13
7039	-	PA Black	130	149	25	40	30	6,4	10

TÜVRheinland CERT ISO 9001

Further materials and surface finishes on request. We will be pleased to give you advise!
Phone: +49 (0) 231 / 725 790 -0 eMail: info@hokon-verschlusstechnik.de
Fax: +49 (0) 231 / 725 790 -10 Homepage: www.hokon-verschlusstechnik.de

Lashing lugs

Ordering example:
Art.no. 6072 .01/02 .04/30

- 6072 — Series
- .01/02 — Model
- .04/30 — Material (zinc plated / stainless steel)

Art. no.: 3106

Lashing lugs

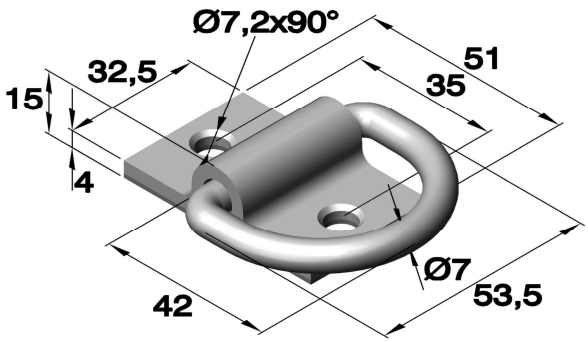

Article no.		
Series	Material	
	Zinc plated	Raw
	Steel	Stainless steel
3106	.04	.30

Art. no.: 3107

Lashing lugs

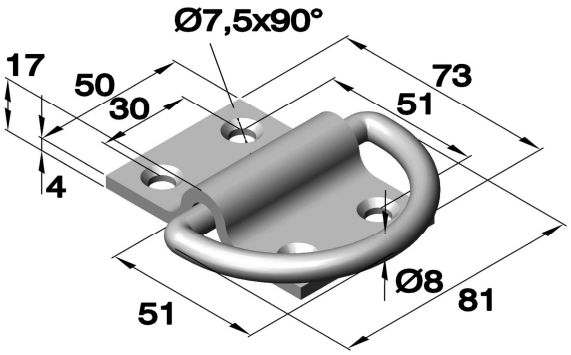

Article no.	
Series	Material
	Zinc plated
	Steel
3107	.04

Further materials and surface finishes on demand. We will be pleased to give you advice!
Phone: +49 (0) 231 / 725 790 -0 eMail: info@hokon-verschlusstechnik.de
Fax: +49 (0) 231 / 725 790 -10 Homepage: www.hokon-verschlusstechnik.de

Lashing lugs

Art. no.: 3108

Lashing lugs

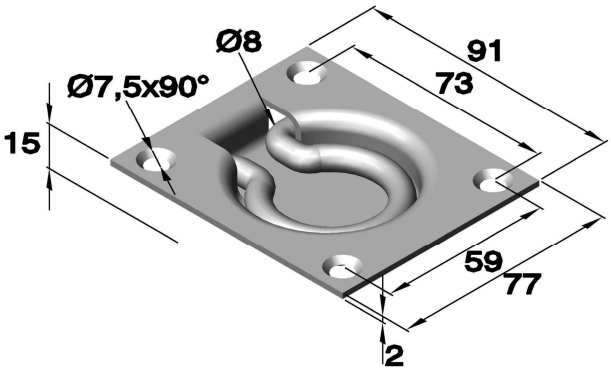

Article no.		
Series	Material	
	Zinc plated	Raw
	Steel	Stainless steel
3108	.04	.30

Art. no.: 3109

Lashing lugs

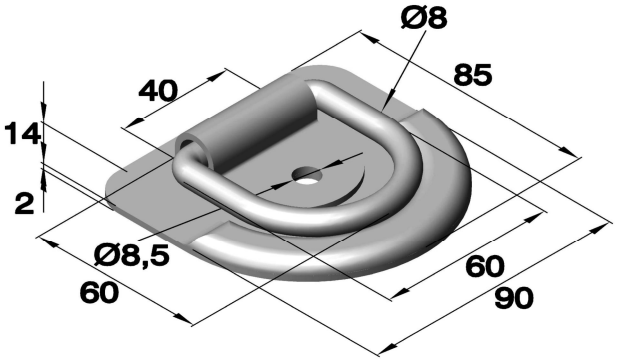

Article no.		
Series	Material	
	Zinc plated	Raw
	Steel	Stainless steel
3109	.04	.30

TÜVRheinland ZERTIFIZIERT Management System ISO 9001:2015 ISO 14001:2015 www.tuv.com ID 9108624624

Further materials and surface finishes on demand. We will be pleased to give you advice!
Phone: +49 (0) 231 / 725 790 -0 eMail: info@hokon-verschlusstechnik.de
Fax: +49 (0) 231 / 725 790 -10 Homepage: www.hokon-verschlusstechnik.de

HoKon

VERSCHLUSSTECHNIK &
SONDERKONSTRUKTIONEN

Zertifiziert nach DIN EN ISO 9001:2008



Piano hinges

Weld on hinges

Hinges

Functional hinges

TÜVRheinland ZERTIFIZIERT

Management System
ISO 9001:2015
ISO 14001:2015

www.tuv.com
ID 9108624624



FOLDER 4 HINGES

FOLDER 1 LATCHES

FOLDER 2 TENSION BANDS

FOLDER 3 HANDLES

FOLDER 4 HINGES

PIANO HINGES E-1

HINGES ..... F

- HINGES F-1
- HEAVY HINGES F-17
- INDIVIDUAL PARTS FOR SELFMADE HINGES F-35
- SPRING HINGES F-41
- PLASTIC HINGES F-61
- TORQUE HINGES F-71
- CONCEALED HINGES F-81
- HINGE FOR VEHICLE CONSTRUCTION AND PLANT ENGINEERING F-101
- ALUMINIUM HINGES F-121
- CRANKED HINGES F-151
- STAINLESS STEEL HINGES F-201

WELD ON HINGES / -ROLLS ..... G

- WELD ON HINGES G-1
- WELD ON HINGE ROLLS G-15

FOLDER 5 LOCKING DEVICES

FOLDER 6 THREADED INSERTS

FOLDER 7 SUNDRIES

GENERAL TERMS AND CONDITIONS .....

Phone: +49 (0) 231 / 725 790 -0 eMail: info@hokon-verschlusstechnik.de
Fax: +49 (0) 231 / 725 790 -10 Homepage: www.hokon-verschlusstechnik.de

Piano hinges

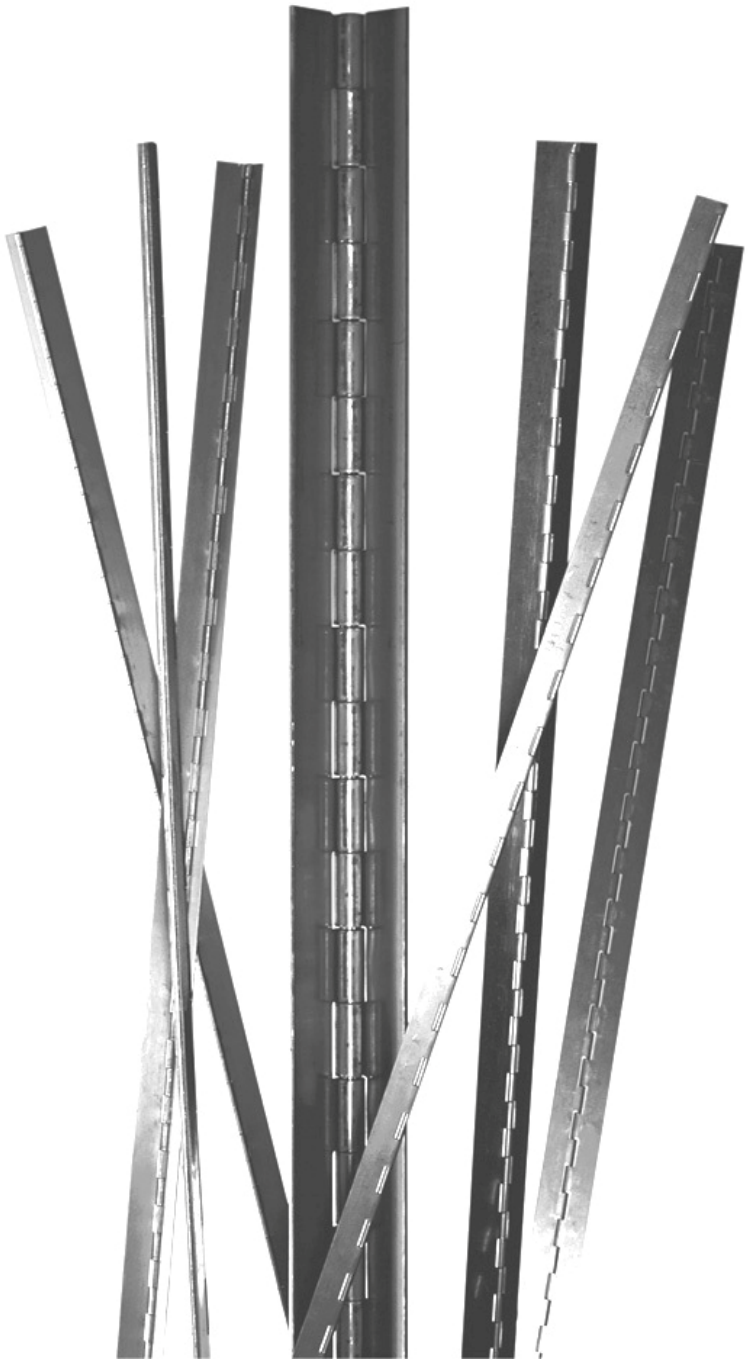

Piano hinges

Ordering example:
Art.no. 6702. 00/30

Material (steel / stainless steel)
Series

Piano hinges, rolled

Width: 15 mm

Art. no.	Material		Dimensions in mm				
	Rod	Pin	A	B	C	D Pin Ø	E
6702.00	Steel	Steel	2040	15	0,7	1,6	15

Hinges can be delivered in other lengths, according to enquiry.
Completion may be perforated, according to enquiry.

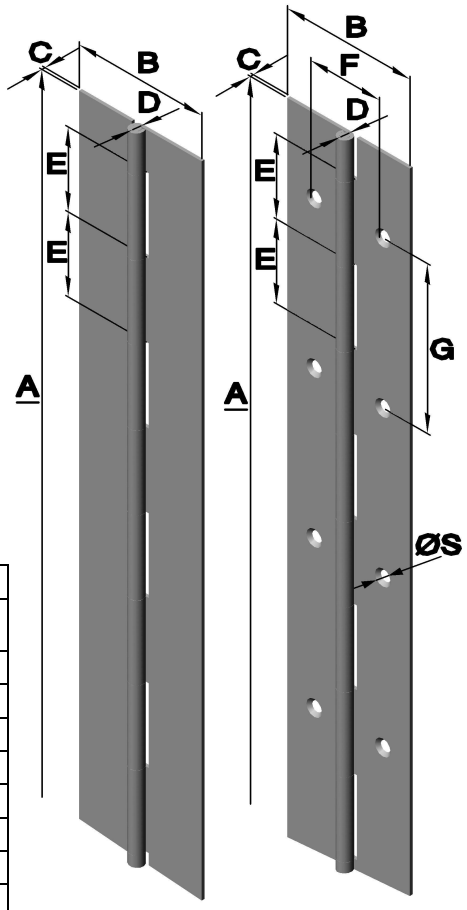

Width: 20 mm

Art. no.	Material		Dimensions in mm							
	Rod	Pin	A	B	C	D Pin Ø	E	F	G	Ø S
6711.00	Steel	Steel	2040	20	0,8	2	15	11,2	60	2,8
6712.30	Stainless steel	Stainless steel	2040	20	0,8	2	15	11,2	60	2,8
6716.70	Aluminium	Steel	2000	20	0,6	2,4	15	-	-	-
6717.00	Steel	Steel	2040	20	0,8	2	15	-	-	-
6718.30	Stainless steel	Stainless steel	2040	20	0,8	2	15	-	-	-

Hinges can be delivered in other lengths, according to enquiry.
Other perforations/perforation distances are possible, according to enquiry.

Width: 25 mm

Art. no.	Material		Dimensions in mm							
	Rod	Pin	A	B	C	D Pin Ø	E	F	G	Ø S
6719.30	Stainless steel	Stainless steel	1800	25	1	2	15	-	-	-
6720.04	Steel	Brass	1800	25	1,2	3	30	-	-	-
6721.00	Steel	Steel	2040	25	0,8	2	15	14,2	60	2,8
6724.22	Brass	Stainless steel	2040	25	0,8	2	15	14,2	60	3,6
6725.70	Aluminium	Steel	2000	25	0,8	2	15	-	-	-
6726.00	Steel	Steel	2040	25	0,8	2	15	-	-	-
6727.20	Brass	Stainless steel	2040	25	0,8	2	15	-	-	-
6728.30	Stainless steel	Stainless steel	2040	25	0,8	2	15	-	-	-
6729.30	Stainless steel	Stainless steel	2040	25	1	2	15	-	-	-
6730.30	Stainless steel	Stainless steel	2040	25	0,8	2	15	14,2	60	3,6

Zinc plated steel - the hinge is prepared from already zinc plated steel.
The edge cuts are, thus, not zinc plated.
Hinges can be delivered in other lengths, according to enquiry.
Other perforations/perforation distances are possible, according to enquiry.

TÜVRheinland ZERTIFIZIERT Management System ISO 9001:2015 ISO 14001:2015 www.tuv.com ID 9108624624

Further materials and surface finishes on demand. We will be pleased to give you advice.
Phone: +49 (0) 231 / 725 790 -0 eMail: info@hokon-verschlusstechnik.de
Fax: +49 (0) 231 / 725 790 -10 Homepage: www.hokon-verschlusstechnik.de

Piano hinges

Width: 30 mm

Art. no.	Material		Dimensions in mm							
	Rod	Pin	A	B	C	D Pin Ø	E	F	G	Ø S
6731.00	Steel	Steel	2040	30	0,8	2	15	16,8	60	3,9
6733.00	Steel	Steel	2040	30	1	2	15	16,8	60	3,9
6735.00	Steel	Steel	2040	30	0,8	2	15	-	-	-
6736.30	Stainless steel	Stainless steel	2040	30	0,8	2	15	-	-	-
6737.20	Brass	Stainless steel	2040	30	0,8	2	15	-	-	-
6738.30	Stainless steel	Stainless steel	2040	30	1	2	15	16,8	60	3,9
6739.22	polished Brass	Stainless steel	2040	30	0,8	2	15	-	-	-
6740.30	Stainless steel	Stainless steel	1800	30	1	2	15	-	-	-
6741.00	Steel	Steel	2040	30	1	2	15	-	-	-
6742.30	Stainless steel	Stainless steel	2040	30	1	2	15	-	-	-
6743.30	Seawater resistant Stainless steel	Stainless steel	2040	30	1	2	15	-	-	-
6744.20	Brass	Stainless steel	2040	30	1	2	15	-	-	-
6745.30	Stainless steel	Stainless steel	2000	30	1,5	4	30	-	-	-
6746.30	Stainless steel	Stainless steel	2000	30	2	6	25	-	-	-
6747.00	Steel	Steel	2000	30	2	6	30	-	-	-
6748.22	polished Brass	Stainless steel	2040	30	1	2	15	-	-	-

Hinges can be delivered in other lengths, according to enquiry.
Other perforations/perforation distances are possible, according to enquiry.

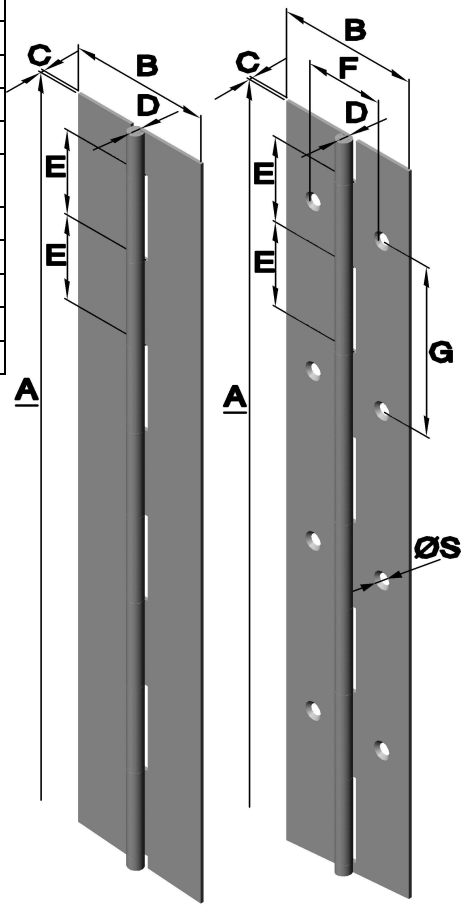

Width: 32 mm

Art. no.	Material		Dimensions in mm				
	Rod	Pin	A	B	C	D Pin Ø	E
6749.30	Stainless steel	Stainless steel	1800	32	1,2	3	30
6750.00	Steel	Steel	1950	32	1,5	3	12,5
6750.30	Stainless steel	Stainless steel	1950	32	1,5	3	12,5

Hinges can be delivered in other lengths, according to enquiry.
Completion may be perforated, according to enquiry.

Width: 35 mm

Art. no.	Material		Dimensions in mm							
	Rod	Pin	A	B	C	D Pin Ø	E	F	G	Ø S
6753.00	Steel	Steel	2040	35	1	2	15	19,5	60	4,5
6754.00	Steel	Steel	2040	35	1	2	15	-	-	-
6755.70	Aluminium	Aluminium	2000	35	1	3	30	-	-	-

Hinges can be delivered in other lengths, according to enquiry.
Other perforations/perforation distances are possible, according to enquiry.

Piano hinges

Width: 40 mm

Art. no.	Material		Dimensions in mm							
	Rod	Pin	A	B	C	D Pin Ø	E	F	G	Ø S
6758.04	Zinc plated steel	Brass	1800	40	1,2	3	30	-	-	-
6759.30	Stainless steel	Stainless steel	1800	40	1,2	3	30	-	-	-
6760.35	Stainless steel	Stainless steel	2040	40	1,2	3	30	22,7	60	4,2
6762.22	polished Brass	Stainless steel	2040	40	1,2	3	30	-	-	-
6763.00	Steel	Steel	2040	40	0,8	2	15	-	-	-
6764.30	Stainless steel	Stainless steel	2040	40	0,8	2	15	-	-	-
6765.00	Steel	Steel	2040	40	1,2	3	30	22,7	60	3,2
6767.00	Steel	Steel	2040	40	1,2	3	30	-	-	-
6768.20	Brass	Stainless steel	2040	40	1,2	3	30	-	-	-
6769.70	Aluminium	Aluminium	2000	40	1,2	3	20	-	-	-
6771.30	Stainless steel	Stainless steel	2040	40	1,2	3	30	-	-	-
6773.00	Steel	Steel	2040	40	1,5	4	15	-	-	-
6774.30	Stainless steel	Stainless steel	2040	40	1,5	4	15	-	-	-
6775.30	Seawater resistant Stainless steel	Stainless steel	2040	40	1,5	4	15	-	-	-
6776.70	Aluminium	Aluminium	2040	40	1,5	4	15	-	-	-
6779.30	Stainless steel	Stainless steel	2040	40	1,5	4	15	22,7	60	4
6756.00	Steel	Steel	1950	40	1,5	3	12,5	-	-	-
6756.30	Stainless steel	Stainless steel	1950	40	1,5	3	12,5	-	-	-

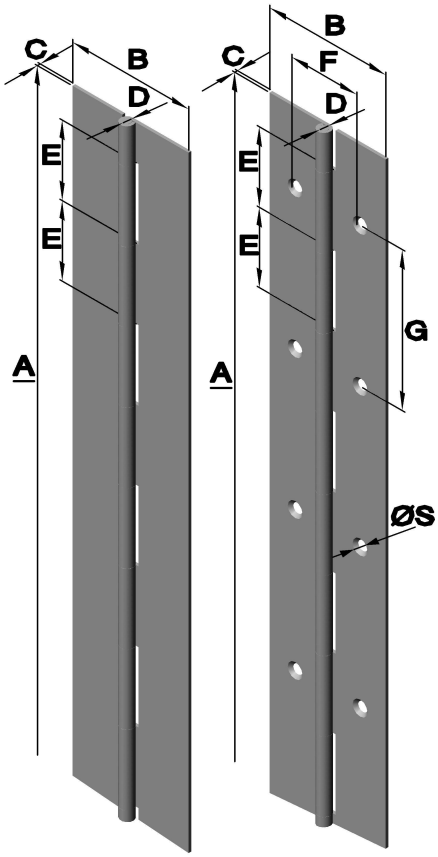

Zinc plated steel - the hinge is prepared from already zinc plated steel.
The edge cuts are, thus, not zinc plated.
Hinges can be delivered in other lengths, according to enquiry.

Width: 44 mm

Art. no.	Material		Dimensions in mm				
	Rod	Pin	A	B	C	D Pin Ø	E
6777.30	Stainless steel	Stainless steel	2040	44	2	6	30

Hinges can be delivered in other lengths, according to enquiry.
Completion may be perforated, according to enquiry.

TÜVRheinland ZERTIFIZIERT Management System ISO 9001:2015 ISO 14001:2015 www.tuv.com ID 9108624624

Further materials and surface finishes on demand. We will be pleased to give you advice.
Phone: +49 (0) 231 / 725 790 -0 eMail: info@hokon-verschlusstechnik.de
Fax: +49 (0) 231 / 725 790 -10 Homepage: www.hokon-verschlusstechnik.de

Piano hinges

Width: 50 mm

Art. no.	Material		Dimensions in mm							
	Rod	Pin	A	B	C	D Pin Ø	E	F	G	Ø S
6781.00	Steel	Steel	2040	50	1,2	3	30	-	-	-
6782.20	Brass	Stainless steel	2040	50	1,2	3	30	-	-	-
6783.00	Steel	Steel	2040	50	1,2	3	30	28	60	4
6784.70	Aluminium	Aluminium	2000	50	1,2	3	20	-	-	-
6785.30	Stainless steel	Stainless steel	2040	50	1,2	3	30	-	-	-
6786.70	Aluminium	Aluminium	2000	50	1,5	4	15	-	-	-
6787.30	Stainless steel	Stainless steel	2000	50	2	4	25	-	-	-
6788.00	Steel	Steel	2040	50	2	6	30	-	-	-
6790.04	Zinc plated steel	Brass	1800	50	1,2	3	30	-	-	-
6791.30	Stainless steel	Stainless steel	1800	50	1,2	3	30	-	-	-
6792.30	Stainless steel	Stainless steel	2040	50	1,2	3	30	28	60	4
6793.30	Stainless steel	Stainless steel	1800	50	1,5	4	15	-	-	-
6794.30	Seawater resistant Stainless steel	Stainless steel	2040	50	1,2	3	30	-	-	-
6798.00	Steel	Steel	1950	50	1,5	3	12,5	-	-	-
6798.30	Stainless steel	Stainless steel	1950	50	1,5	3	12,5	-	-	-

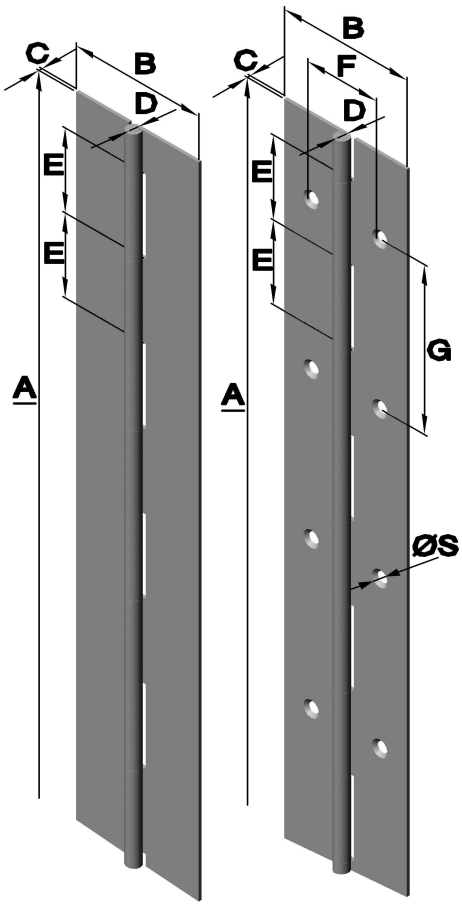

Zinc plated steel - the hinge is prepared from already zinc plated steel.
The edge cuts are, thus, not zinc plated.
Hinges can be delivered in other lengths, according to enquiry.
Other perforations/perforation distances are possible, according to enquiry.

Width: 57 mm

Art. no.	Material		Dimensions in mm				
	Rod	Pin	A	B	C	D Pin Ø	E
6795.04	galvanized steel	Brass	2160	57	1,5	4	15
6796.30	Stainless steel	Stainless steel	2160	57	1,5	4	15
6797.04	galvanized steel	Brass	2160	57	2	6	30

galvanized Steel - the hinge is prepared from already zinc plated steel.
The edge cuts are, thus, not zinc plated.
Hinges can be delivered in other lengths, according to enquiry.
Completion may be perforated, according to enquiry.

Width: 60 mm

Art. no.	Material		dimensions in mm							
	rod	pin	A	B	C	D Pin Ø	E	F	G	Ø S
6801.00	Steel	Steel	2000	60	1,5	8	40	-	-	-
6802.00	Steel	Steel	2000	60	1,5	5	40	-	-	-
6803.00	Steel	Steel	2040	60	2	6	30	-	-	-
6804.30	Stainless steel	Stainless steel	2040	60	2	6	30	-	-	-
6805.30	Seawater resistant Stainless steel	Stainless steel	2040	60	2	6	30	-	-	-
6806.70	Aluminium	Aluminium	2000	60	2	6	30	-	-	-
6807.30	Stainless steel	Stainless steel	2040	60	2	6	30	35	60	4

Hinges can be delivered in other lengths, according to enquiry.
Other perforations/perforation distances are possible, according to enquiry.

Piano hinges

Width: 63 mm

Art. no.	Material		Dimensions in mm				
	Rod	Pin	A	B	C	D Pin Ø	E
6808.30	Stainless steel	Stainless steel	1800	63	1,5	4	15

Hinges can be delivered in other lengths, according to enquiry.
Completion may be perforated, according to enquiry.

Width: 70 mm

Art. no.	Material		Dimensions in mm				
	Rod	Pin	A	B	C	D Pin Ø	E
6810.30	Stainless steel	Stainless steel	1800	70	1,5	4	15
6811.00	Steel	Steel	2040	70	2	6	30
6812.30	Stainless steel	Stainless steel	2040	70	2	6	30

Hinges can be delivered in other lengths, according to enquiry.
Completion may be perforated, according to enquiry.

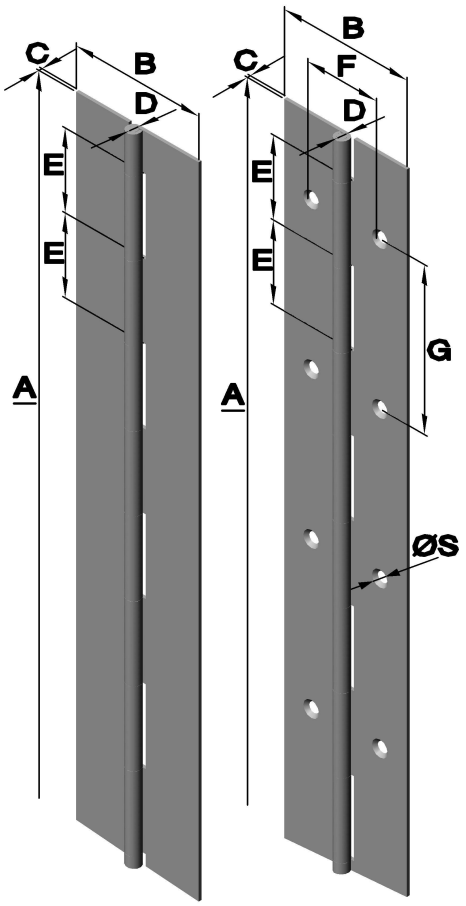

Width: 76 mm

Art. no.	Material		Dimensions in mm				
	Rod	Pin	A	B	C	D Pin Ø	E
6817.04	galvanized Steel	Brass	2160	76	1,5	4	15
6818.30	Stainless steel	Stainless steel	2160	76	1,5	4	15

galvanized steel - the hinge is prepared from already zinc plated steel.
The edge cuts are, thus, not zinc plated.
Hinges can be delivered in other lengths, according to enquiry.
Other perforations/perforation distances are possible, according to enquiry.

Width: 80 mm

Art. no.	Material		Dimensions in mm				
	Rod	Pin	A	B	C	D Pin Ø	E
6813.00	Steel	Steel	2000	80	2	7,6	40
6814.30	Stainless steel	Stainless steel	1000	80	3	6	40
6815.00	Steel	Steel	2000	80	3	6	40
6816.30	Stainless steel	Stainless steel	2000	80	3	6	40
6819.00	Steel	Steel	1950	80	1,5	3	12,5
6819.30	Stainless steel	Stainless steel	1950	80	1,5	3	12,5
6820.70	Aluminium 5754	Aluminium	2000	80	3	6	40

Hinges can be delivered in other lengths, according to enquiry.
Completion may be perforated, according to enquiry.

TÜVRheinland ZERTIFIZIERT
Management System ISO 9001:2015 ISO 14001:2015
www.tuv.com ID 9108624624

Further materials and surface finishes on demand. We will be pleased to give you advice.
Phone: +49 (0) 231 / 725 790 -0 eMail: info@hokon-verschlusstechnik.de
Fax: +49 (0) 231 / 725 790 -10 Homepage: www.hokon-verschlusstechnik.de

Piano hinges

Width: 100 mm

Art. no.	Material		Dimensions in mm				
	Rod	Pin	A	B	C	D Pin Ø	E
6830.00	Steel	Steel	2000	100	3	10	40
6830.30	Stainless steel **on enquiry**	Stainless steel	2000	100	3	10	40
6836.00	Steel	Steel	1000	100	4	10	40
6838.30	Stainless steel	Stainless steel	2000	100	3	6	40

Hinges can be delivered in other lengths, according to enquiry.
Completion may be perforated, according to enquiry.

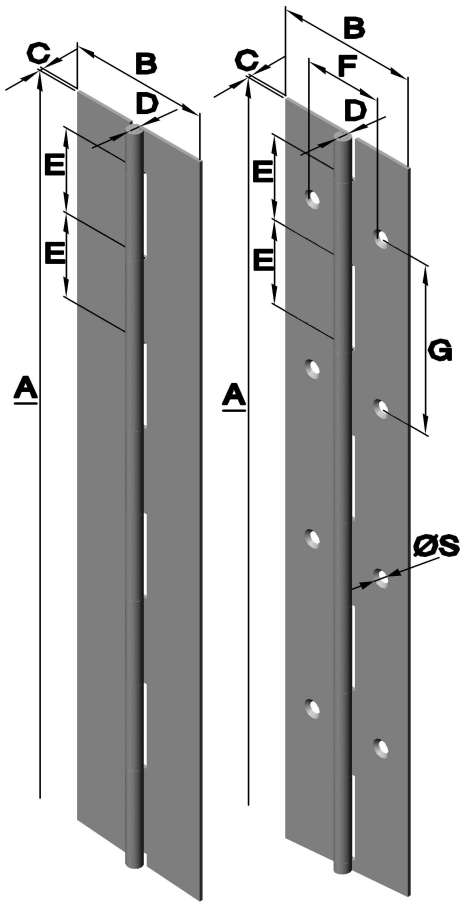

Width: 120 mm

Art. no.	Material		Dimensions in mm				
	Rod	Pin	A	B	C	D Pin Ø	E
6831.30	Stainless steel	Stainless steel	2100	120	2	6	30
6840.00	Steel	Steel	1000	120	5	10	40

Hinges can be delivered in other lengths, according to enquiry.
Completion may be perforated, according to enquiry.

Width: 127 mm

Art. no.	Material		Dimensions in mm				
	Rod	Pin	A	B	C	D	E
6833.04	zinc plated steel	brass	2160	127	3	6	40

Hinges can be delivered in other lengths, according to enquiry.
Completion may be perforated, according to enquiry.
The hinge is prepared from already zinc plated steel.
The edge cuts are, thus, not zinc plated.

Piano hinges

Piano hinges, rolled, angulated

1 angulated leaf

Art. no.	Material		Dimensions in mm								
	Rod	Pin	A	B	C	D Pin Ø	E	F	G	H	Ø S
6832.04	Zinc plated	Stainless steel	1000	31,5	1	2	30	7,5	60	20	3,5
6834.04	Zinc plated	Stainless steel	2000	31,5	1	2	30	7,5	60	20	3,5
6835.30	Stainless steel	Stainless steel	2000	31,5	1	2	30	7,5	60	20	3,5

Hinges can be delivered in other lengths, according to enquiry.
Other perforations/perforation distances are possible, according to enquiry.

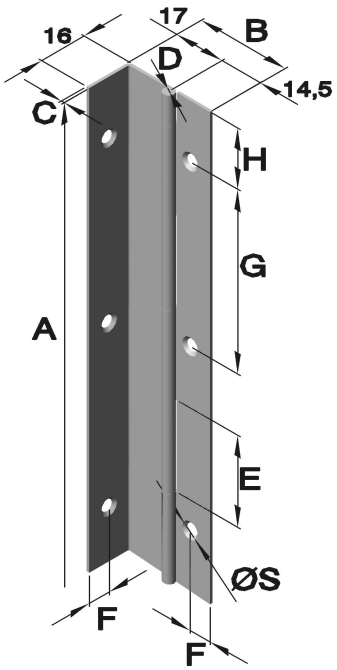

1 angulated leaf

Art. no.	Material		Dimensions in mm				
	Rod	Pin	A	B	C	D Pin Ø	E
6837.04	Zinc plated	Stainless steel	2000	44	1,5	3	25
6837.30	Stainless steel	Stainless steel	2000	44	1,5	3	25
6839.30	Stainless steel	Stainless steel	1600	44	1,5	3	25

Hinges can be delivered in other lengths, according to enquiry.
Completion may be perforated, according to enquiry.

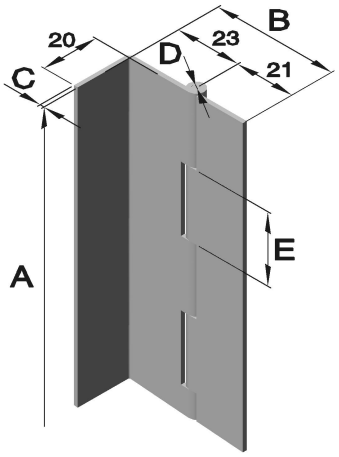

2 angulated leaf

Art. no.	Material		Dimensions in mm				
	Rod	Pin	A	B	C	D Pin Ø	E
6844.04	Zinc plated	Stainless steel	2000	46	1,5	3	25
6846.30	Stainless steel	Stainless steel	2000	46	1,5	3	25

Hinges can be delivered in other lengths, according to enquiry.
Completion may be perforated, according to enquiry.

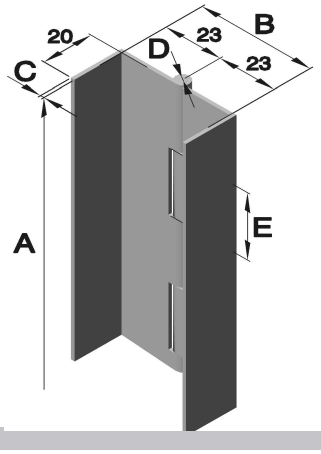

TÜVRheinland ZERTIFIZIERT
Management System
ISO 9001:2015
ISO 14001:2015
www.tuv.com ID 9108624624

Further materials and surface finishes on demand. We will be pleased to give you advice.
Phone: +49 (0) 231 / 725 790 -0
Fax: +49 (0) 231 / 725 790 -10
eMail: info@hokon-verschlusstechnik.de
Homepage: www.hokon-verschlusstechnik.de

Piano hinges

Aluminium profile hinge

Width 50

Art. no.	Material		Dimensions in mm				
	Rod	Pin	A	B	C	D Pin Ø	E
6848.70	Aluminium 6060 T5	Stainless steel	2000	50	3	5,2	35,5

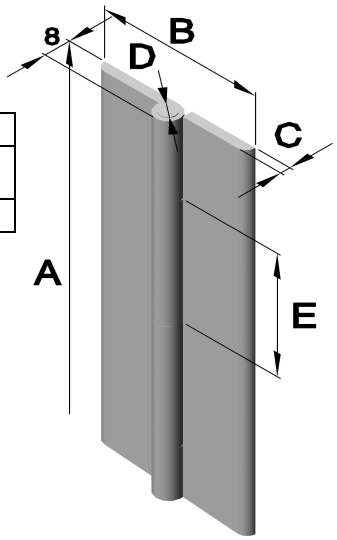

Hinges can be delivered in other lengths, according to enquiry.
Completion may be perforated, according to enquiry.

Art. no.	Material		Dimensions in mm				
	Rod	Pin	A	B	C	D Pin Ø	E
6841.71	Aluminium 6082 T5	Stainless steel	915	31,75	1,3	2,2	12,7
6849.70	Aluminium 6082 T5	Stainless steel	1830	31,75	1,3	2,2	12,7
6842.70	Aluminium 6082 T5	Stainless steel	915	44,45	1,3	2,2	12,7
6843.71	Aluminium 6082 T5	Stainless steel	1830	44,45	1,3	2,2	12,7
6845.70	Aluminium 6082 T5	Stainless steel	915	63,5	1,3	2,2	12,7
6847.71	Aluminium 6082 T5	Stainless steel	1830	63,5	1,3	2,2	12,7

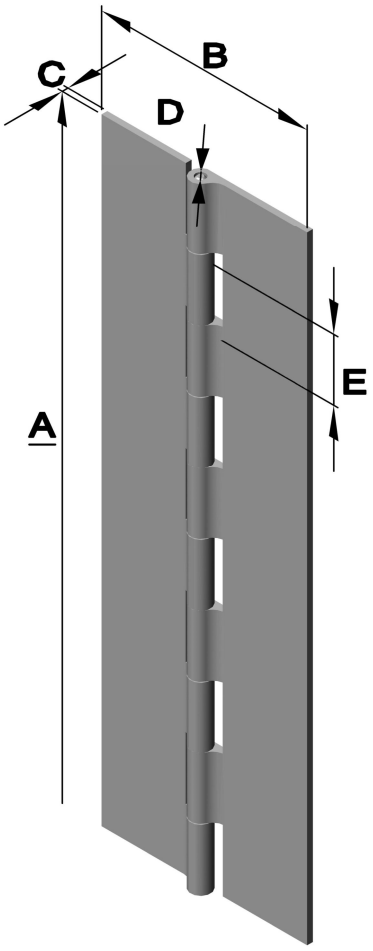

Hinges can be delivered in other lengths, according to enquiry.
Completion may be perforated, according to enquiry.
.

Piano hinges

Aluminium profile hinge with double articulation

Opening angle of 180° without sealing (ordered separately)

Art. no.	Material		Dimensions in mm		
	Rod	Pin	A	B	D pin Ø
6850.70	Aluminium 6060 T5	Stainless steel	2000	65	5
6851.70	Aluminium 6060 T5	Stainless steel	2500	15	5
6852.70	Aluminium 6060 T5	Stainless steel	3000	115	5

with optional gasket

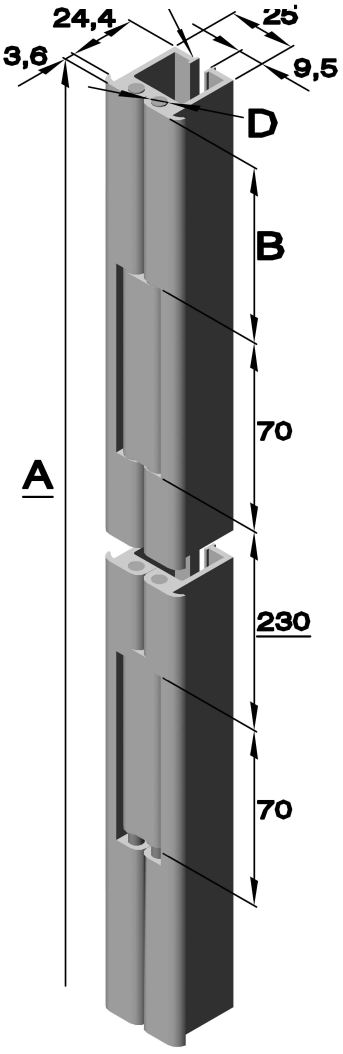

Sealing

for hinge with double articulation

Art. no.	Material	Dimensions in mm
		A
6853.D	Rubber, Black	2000
6854.D	Rubber, Black	2500
6855.D	Rubber, Black	3000



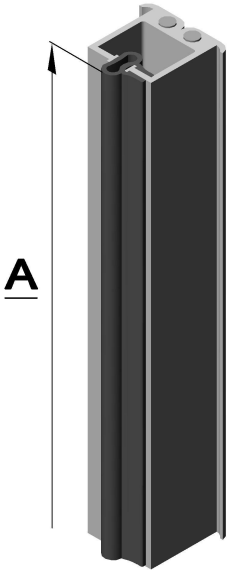

Management System ISO 9001:2015 ISO 14001:2015 TÜVRheinland ZERTIFIZIERT www.tuv.com ID 9108624624

Further materials and surface finishes on demand. We will be pleased to give you advice.
Phone: +49 (0) 231 / 725 790 -0 eMail: info@hokon-verschlusstechnik.de
Fax: +49 (0) 231 / 725 790 -10 Homepage: www.hokon-verschlusstechnik.de

Piano hinges

Plastic hinges in rolls of 15.25 m

Technical information:
Temperature: - 40° C up to + 80°C.
Fixing with rivets, bolts, nails, bars.
Chemical resistance: oil, seawater, solvents and most chemical substances.

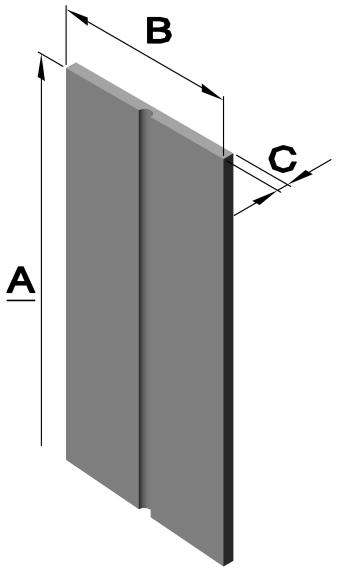

Art. no.	Colour	Material	Dimensions in mm		
			A	B	C
6521.01	White	Polypropylene	15250	28,6	3,2
6521.02	Gray	Polypropylene	15250	28,6	3,2
6521.03	Black	Polypropylene	15250	28,6	3,2
6522.01	White	Polypropylene	15250	38,1	3,2
6522.02	Gray	Polypropylene	15250	38,1	3,2
6522.03	Black	Polypropylene	15250	38,1	3,2
6523.01	White	Polypropylene	15250	50,8	3,2
6523.02	Gray	Polypropylene	15250	50,8	3,2
6523.03	Black	Polypropylene	15250	50,8	3,2
6524.01	White	Polypropylene	15250	76,2	3,2
6524.02	Gray	Polypropylene	15250	76,2	3,2
6524.03	Black	Polypropylene	15250	76,2	3,2

Piano hinges

Management System
ISO 9001:2015
ISO 14001:2015
TÜVRheinland ZERTIFIZIERT
www.tuv.com ID 9108624624

Further materials and surface finishes on demand. We will be pleased to give you advice.
Phone: +49 (0) 231 / 725 790 -0
Fax: +49 (0) 231 / 725 790 -10
eMail: info@hokon-verschlusstechnik.de
Homepage: www.hokon-verschlusstechnik.de

Hinges














Hinges














TÜVRheinland ZERTIFIZIERT
Management System
ISO 9001:2015
ISO 14001:2015
www.tuv.com ID 9108624624

Further materials and surface finishes on demand. We will be pleased to give you advice.
Phone: +49 (0) 231 / 725 790 -0 eMail: info@hokon-verschlusstechnik.de
Fax: +49 (0) 231 / 725 790 -10 Homepage: www.hokon-verschlusstechnik.de

Hinges

Materials and surface finishes:

.00	raw steel (1.1203)
.01	nickel-plated
.02	brassed
.03	chromated
.04	zinc plated steel
.05	bronzed
.06	black zinc plated
.07	blued
.08	yellow chromated
.09	EPD (Electrophoretic deposition)
.10	anodized silver-coloured
.20	raw brass
.22	polished brass
.23	chromated brass
.30	raw stainless steel (1.4301)
.33	polished stainless steel
.35	raw stainless steel (1.4401)
.50	raw Zamak (zinc aluminium magnesium copper)
.70	raw aluminium
.80	raw polyamide

Ordering example:

Art.no 6001. 01/02. 04/30

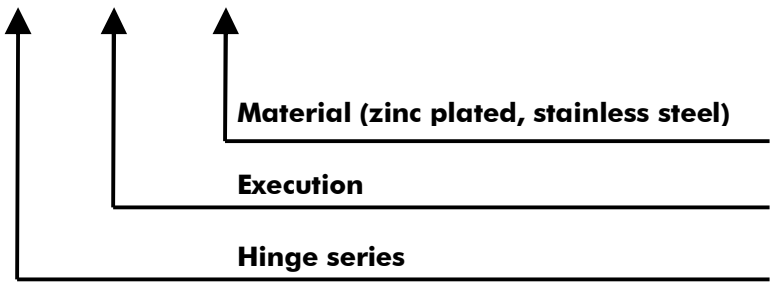

Hinges

Art. no.: 6001

with extractable pin

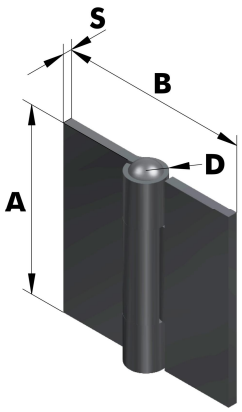

Article no.			Dimensions in mm				
Series	Execution	Material	A	B	D	S	Pin Ø
		Raw					
		Steel					
6001	.01	.00	40	40	8	2	4
6001	.02	.00	50	50	10	2	6
6001	.03	.00	60	60	10	2	6
6001	.04	.00	70	70	10	2	6

Art. no.: 6002

with riveted pin

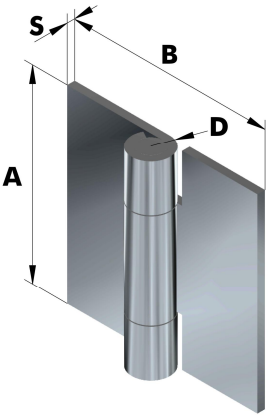

Article no.					Dimensions in mm					
Series	Execution	Material			A	B	D	E	S	Pin Ø
		Raw	Stainless steel	Stainless steel						
		Steel	1.4301	1.4401						
6002	.01	.00	.30	.35	40	40	8	4	2	4
6002	.02	.00	.30	.35	50	50	10	5	2	6
6002	.03	.00	.30	.35	60	60	10	5	2	6
6002	.04	.00	.30	-	70	70	10	5	2	6
6002	.05	.00	.30	-	80	80	11	5,5	2,5	6
6002	.06	.00	.30	-	100	100	11	5,5	2,5	6

Art. no.: 6002 (drilled and countersunk)

with riveted pin

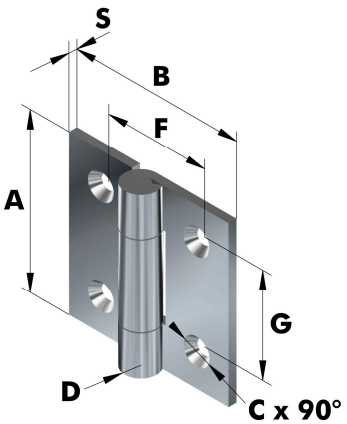

Article no.				Dimensions in mm							
Series	Execution	Material		A	B	C Ø	D	F	G	S	Pin Ø
		Stainless steel	Stainless steel								
		1.4301	1.4401								
6002	.07	.30	.35	40	40	4	8	24	24	2	4
6002	.08	.30	.35	50	50	4,5	10	34	34	2	6
6002	.09	.30	.35	60	60	4,5	10	44	40	2	6

Art. no.: 6002 (drilled and countersunk)

with riveted pin

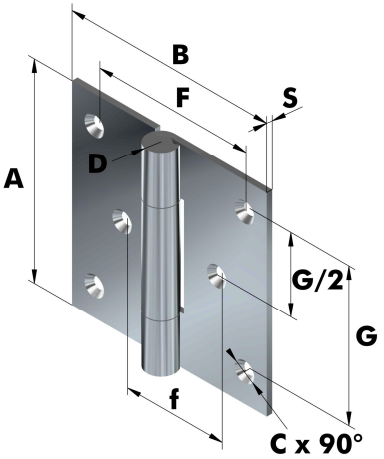

Article no.			Dimensions in mm								
Series	Execution	Material	A	B	C Ø	D	F	f	G	S	Pin Ø
		Stainless steel									
		1.4301									
6002	.10	.30	70	70	4,5	10	54	34	50	2	6
6002	.11	.30	80	80	4,5	11	64	39	60	2,5	6

TÜVRheinland ZERTIFIZIERT
Management System ISO 9001:2015 ISO 14001:2015
www.tuv.com ID 9108624624

Further materials and surface finishes on demand. We will be pleased to give you advice.
Phone: +49 (0) 231 / 725 790 -0 eMail: info@hokon-verschlusstechnik.de
Fax: +49 (0) 231 / 725 790 -10 Homepage: www.hokon-verschlusstechnik.de

Hinges

Art. no.: 6003 (drilled and countersunk)
with extractable pin

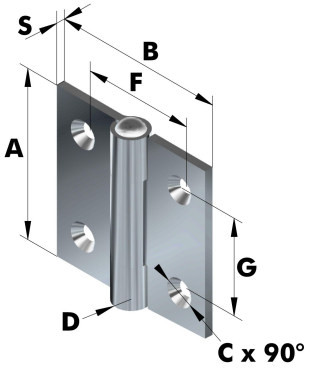

Article no.				Dimensions in mm							
Series	Execution	Material		A	B	C Ø	D	F	G	S	Pin Ø
		Zinc plated	Stainless steel								
		Steel	1.4301								
6003	.01	.04	.30	40	40	4	8	26	24	2	4
6003	.02	.04	.30	50	50	4.5	10	34	34	2	6
6003	.03	.04	.30	60	60	4.5	10	44	40	2	6

Art. no.: 6004 (drilled and countersunk)
with extractable pin,

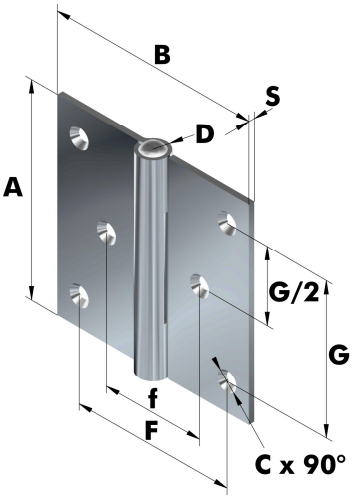

Article no.				Dimensions in mm								
Series	Execution	Material		A	B	C Ø	D	F	f	G	S	Pin Ø
		Zinc plated	Stainless steel									
		Steel	1.4301									
6004	.01	.04	.30	70	70	4	10	54	34	50	2	6
6004	.02	.04	.30	80	80	4,5	11	64	39	60	2,5	6

Art. no.: 6005 (drilled and countersunk)
with riveted pin

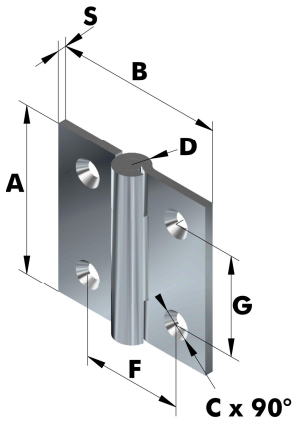

Article no.				Dimensions in mm							
Series	Execution	Material		A	B	C Ø	D	F	G	S	Pin Ø
		Stainless steel	Stainless steel								
		1.4301	1.4401								
6005	.01	.30	.35	40	40	4	8	24	24	2	4
6005	.02	.30	.35	50	50	4,5	10	34	34	2	6
6005	.03	.30	.35	60	60	4,5	10	44	40	2	6

Art. no.: 6006 (drilled and countersunk)
with riveted pin

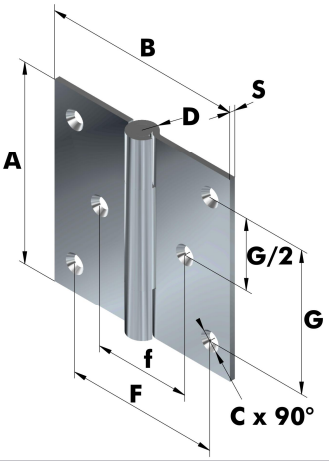

Article no.				Dimensions in mm								
Series	Execution	Material		A	B	C Ø	D	F	f	G	S	Pin Ø
		Stainless steel	Zinc plated									
		1.4301	Steel									
6006	.01	.30	-	70	70	4,5	10	54	34	50	2	6
6006	.02	.30	-	80	80	4,5	11	64	39	60	2,5	6
6006	.04	-	.04	100	84	5,5	-	55	42	79	3	6

Hinges

Art. no.: 6007 (drilled and countersunk)
with fixed pin

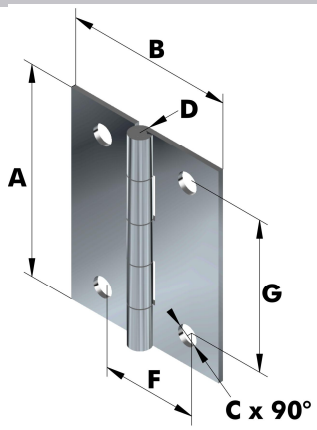

Article no.				Dimensions in mm							
Series	Execution	Material		A	B	C Ø	D	F	G	S	Pin Ø
		Zinc plated	Stainless steel								
		Steel	1.4301								
6007	**.01**-drilled	**.04**	**.30**	50	40	5	3,1	23	36	1,2	2,7
6007	**.02**-sunk	**.04**	**.30**	50	40	5	3,1	23	36	1,2	2,7
6007	**.03**-sunk	**-**	**.30**	60	35	4	2	19,5	40	1	1
6007	**.04**-sunk	**-**	**.30**	60	35	4	2	19,5	40	1	1

Art. no.: 6008
with riveted pin

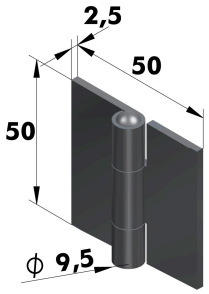

Article no.		
Series	Execution	Material
		Raw
		Steel
6008	**.01**	**.00**

Art. no.: 6009 (drilled and countersunk)
with fixed pin and nylon transitional ring

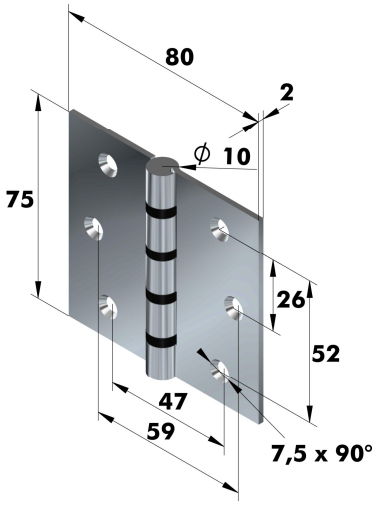

Article no.		
Series	Execution	Material
		Stainless steel
		1.4301
6009	**.01**	**.30**

Art. no.: 6010 (drilled and countersunk)
with fixed pin

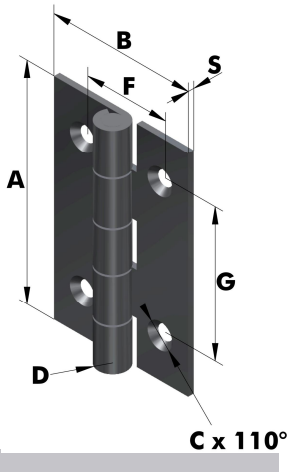

Article no.				Dimensions in mm							
Series	Execution	Material		A	B	C Ø	D	F	G	S	Pin Ø
		Raw	Stainless steel								
		Steel	1.4301								
6010	**.01**	**.00**	**-**	30	19	2	4	11	19	0,8	2,4
6010	**.02**	**.00**	**-**	35	22	2,5	4	14	22	0,8	2,4
6010	**.03**	**.00**	**-**	40	25	2,5	4,5	15	27	0,9	2,7
6010	**.04**	**-**	**.30**	50	30	3,5	5	17	35	1	3
6010	**.05**	**.00**	**-**	50,3	29,8	2,5	4,4	15,4	35,2	1	2,4

TÜVRheinland ZERTIFIZIERT
Management System ISO 9001:2015 ISO 14001:2015
www.tuv.com ID 9108624624

Further materials and surface finishes on demand. We will be pleased to give you advice.
Phone: +49 (0) 231 / 725 790 -0 eMail: info@hokon-verschlusstechnik.de
Fax: +49 (0) 231 / 725 790 -10 Homepage: www.hokon-verschlusstechnik.de

Hinges

Art. no.: 6010
with fixed steel pin

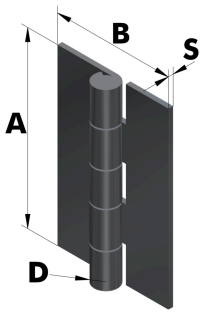

Article no.			Dimensions in mm				
Series	Execution	Material Raw Steel	A	B	D	S	Pin Ø
6010	.06	.00	30	19	4	0,8	2,4
6010	.07	.00	35	22	4	0,8	2,4
6010	.08	.00	40	25	4,5	0,9	2,7
6010	.10	.00	50,3	29,8	4,4	1	2,4

Art. no.: 6011 (drilled and countersunk)
with fixed steel pin

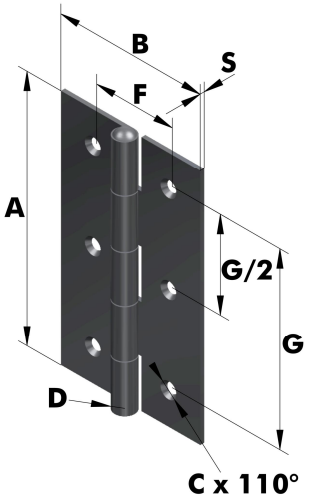

Article no.			Dimensions in mm							
Series	Execution	Material Raw Steel	A	B	C Ø	D	F	G	S	Pin Ø
6011	.01	.00	60	35	2,5	5	19	44	1	3
6011	.02	.00	70	41,5	3	5,5	24,1	52	1	3,5
6011	.03	.00	80,5	45,4	4	5,5	26,2	59,3	1	3,5
6011	.04	.00	100	50	4,5	7,9	30	77	1,5	4,9

Art. no.: 6011
with fixed steel pin, drills on inquiry

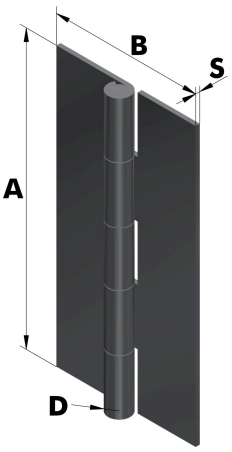

Article no.			Dimensions in mm				
Series	Execution	Material Raw Steel	A	B	D	S	Pin Ø
6011	.05	.00	60	35	5	1	3
6011	.06	.00	70	41,5	5,5	1	3,5
6011	.07	.00	80	45	6,3	1,2	3,9
6011	.08	.00	100	50	7,9	1,5	4,9

Art. no.: 6013
with fixed pin, drilled and countersunk

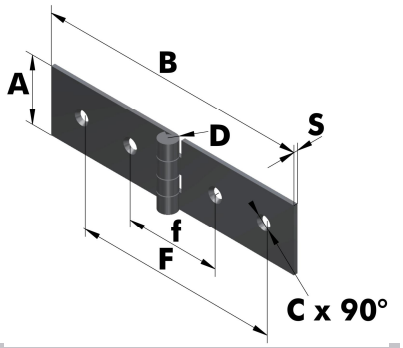

Article no.			Dimensions in mm							
Series	Execution	Material Raw Steel	A	B	C Ø	D	F	f	S	Pin Ø
6013	.01	.00	20	77	3	5,6	60	28	1,2	3
6013	.02	.00	22	120	4	8	93	33	1,5	4,9

Hinges

Art. no.: 6015 (drilled and countersunk)
with fixed pin

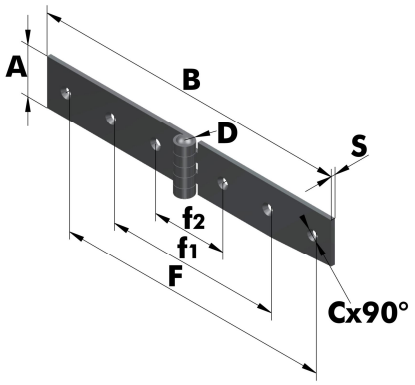

Article no.				Dimensions in mm								
Series	Execution	Material		A	B	C Ø	D	F	f1	f2	S	Pin Ø
		Raw	Zinc plated									
		Steel	Steel									
6015	.01	.00	.04	30	190	4	11	165	80	45	2,5	6
6015	.02	.00	.04	30	220	4	11	193	118	43	2,5	6

Art. no.: 6016 (drilled and countersunk)
with fixed pin

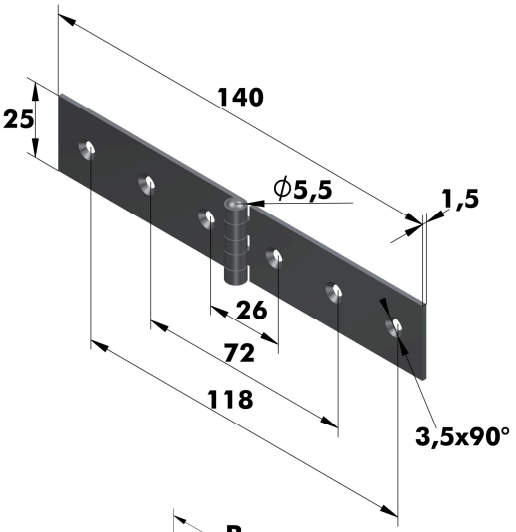

Article no.		
Series	Execution	Material
		Raw
		Steel
6016	.01	.00

Art. no.: 6018 (drilled and countersunk)
with fixed stainless-steel pin

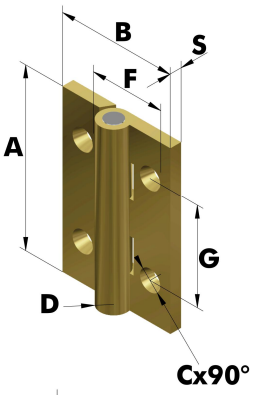

Article no.			Dimensions in mm							
Series	Execution	Material	A	B	C Ø	D	F	G	S	Pin Ø
		Raw								
		Brass								
6018	.03	.20	30	20	2,5	5	12,5	16,5	2	3
6018	.04	.20	30	30	2,5	5	19	17	2	3

Art. no.: 6019 (drilled and countersunk)
with fixed stainless-steel pin

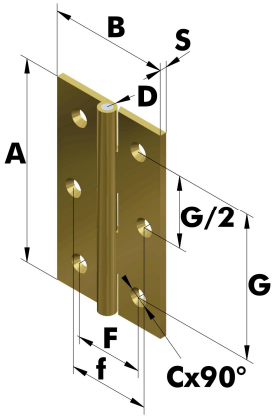

Article no.			Dimensions in mm								
Series	Execution	Material	A	B	C Ø	D	F	f	G	S	Pin Ø
		Raw									
		Brass									
6019	.03	.20	40	35	3	5	21	-	28	2	3
6019	.04	.20	40	40	3	5	23	-	28	2	3
6019	.05	.20	50	30	3	5	17,5	-	35	2	3
6019	.06	.20	60	35	3,5	5	20	24	43	2	3
6019	.07	.20	60	40	3,5	4,5	21,5	26	43	2	3

TÜVRheinland ZERTIFIZIERT
Management System ISO 9001:2015 ISO 14001:2015
www.tuv.com ID 9108624624

Further materials and surface finishes on demand. We will be pleased to give you advice.
Phone: +49 (0) 231 / 725 790 -0 eMail: info@hokon-verschlusstechnik.de
Fax: +49 (0) 231 / 725 790 -10 Homepage: www.hokon-verschlusstechnik.de

Hinges

Art. no.: 6020 (drilled and countersunk)
with fixed stainless-steel pin

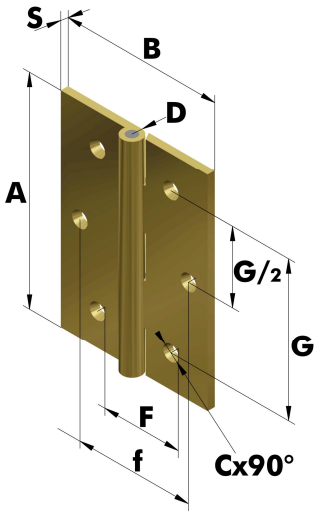

Article no.			Dimensions in mm								
Series	Execution	Material Raw Brass	A	B	C Ø	D	F	f	G	S	Pin Ø
6020	.01	.20	70	40	3,5	5,5	23	27	48	2	3
6020	.02	.20	70	50	3,5	6,5	25	37	48	2,5	3,5
6020	.03	.20	80	45	3,5	5,5	22,5	30,5	58	2,2	3
6020	.04	.20	80	60	4	7	28	45	57	3	4

Art. no.: 6022
with riveted stainless-steel pin, drills on inquiry

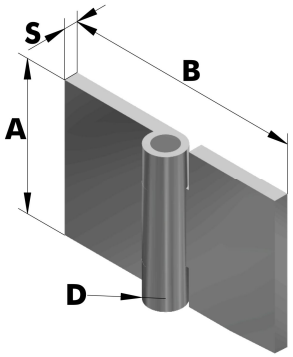

Article no.			Dimensions in mm								
Series	Execution	Material Raw Aluminium	A	B	C Ø	D	F	f	G	S	Pin Ø
6022	.01	.70	32	50	-	8	-	-	-	3	5,2
6022	.02	.70	50	50	-	8	-	-	-	3	5,2
6022	.03	.70	32	50	3,2	8	30	-	20	3	5,2

Art. no.: 6023
with riveted stainless-steel pin, drills on inquiry

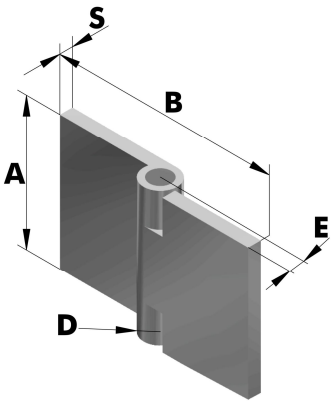

Article no.			Dimensions in mm					
Series	Execution	Material Raw Aluminium	A	B	D	E	S	Pin Ø
6023	.01	.70	32	50	8	4	3	5,2
6023	.02	.70	50	50	8	4	3	5,2

Art. no.: 6025 (perforated and countersunk)
with fixed stainless-steel pin

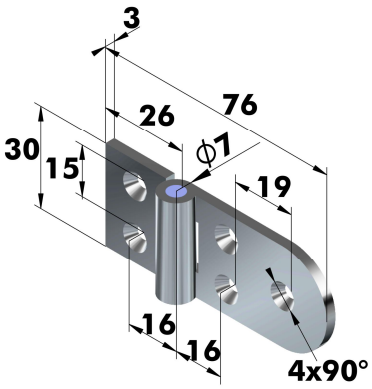

Article no.		
Series	Execution	Material Chromated Brass
6025	.01	.23

Hinges

Art. no.: 6027 (perforated and countersunk)
with fixed stainless-steel pin

Article no.		
Series	Execution	Material
		Chromated
		Brass
6027	.01	.23

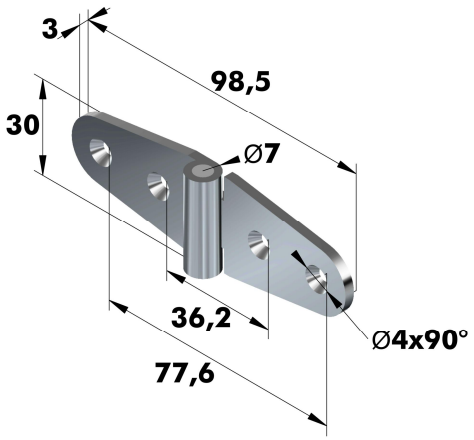

Art. no.: 6028 (perforated and countersunk)
with fixed stainless-steel pin

Article no.		
Series	Execution	Material
		Chromated
		brass
6028	.01	.23

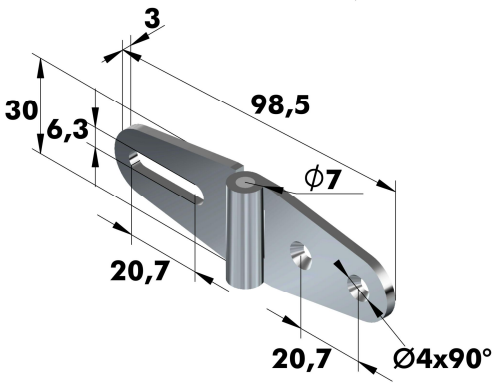

Art. no.: 6029 (perforated and countersunk)

Suitable to art. no.: **6026/6028**

Article no.		
Series	Execution	Material
		Chromated
		Brass
6029	.01	.23

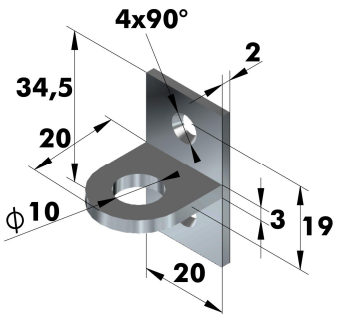

Art. no.: 6044 (perforated and countersunk)
with fixed pin

Article no.		
Series	Execution	Material
		Zinc plated
		Steel
6044	.01	.04

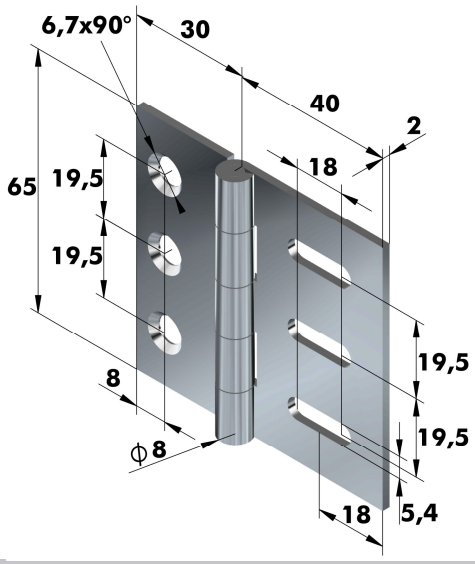

TÜVRheinland ZERTIFIZIERT
Management System ISO 9001:2015 ISO 14001:2015
www.tuv.com ID 9108624624

Further materials and surface finishes on demand. We will be pleased to give you advice.
Phone: +49 (0) 231 / 725 790 -0 eMail: info@hokon-verschlusstechnik.de
Fax: +49 (0) 231 / 725 790 -10 Homepage: www.hokon-verschlusstechnik.de

Hinges

Art. no.: 6046 (perforated and countersunk)
with fixed pin

Article no.		
Series	Execution	Material
		Nickel-plated
		Steel
6046	.01	.01

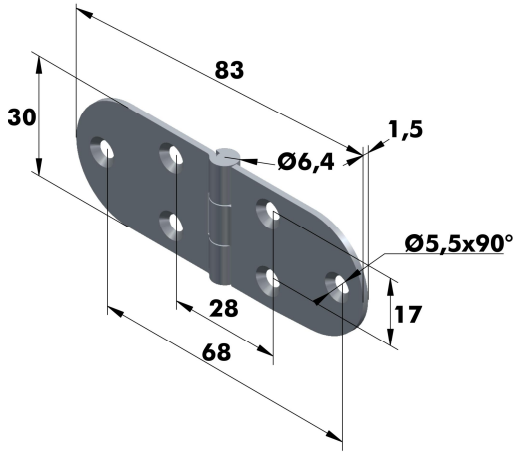

Art. no.: 6047
with fixed pin

Article no.			
Series	Execution	Material	
		Raw	Stainless steel
		Steel	1.4301
6047	.01	.00	.30

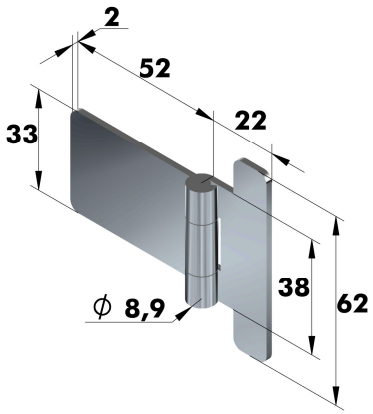

Art. no.: 6048
with fixed pin

Stainless steel (1.4301) on inquiry

Article no.			
Series	Execution	Material	
		Raw	Stainless steel
		Steel	1.4301
6048	.01	.00	.30

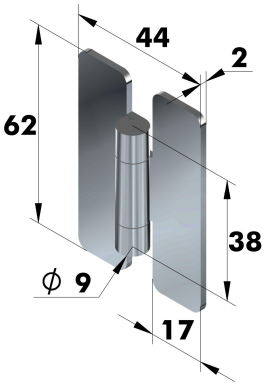

Art. no.: 6051
with fixed pin, perforated and countersunk

Article no.		
Series	Execution	Material
		Raw
		Steel
6051	.01	.00

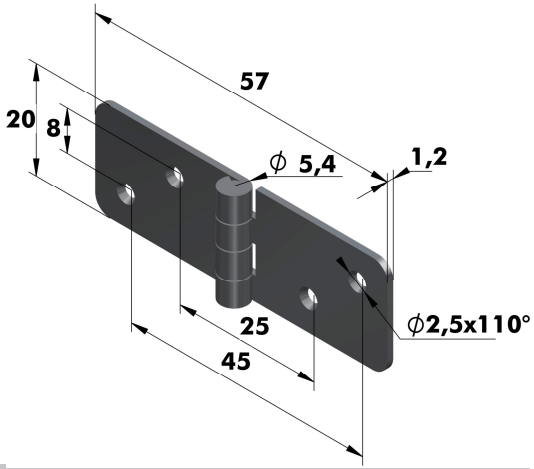

Hinges

Art. no.: 6052 (perforated and countersunk)

with fixed pin
Stop at 60°
Suitable for the installation of glass doors.

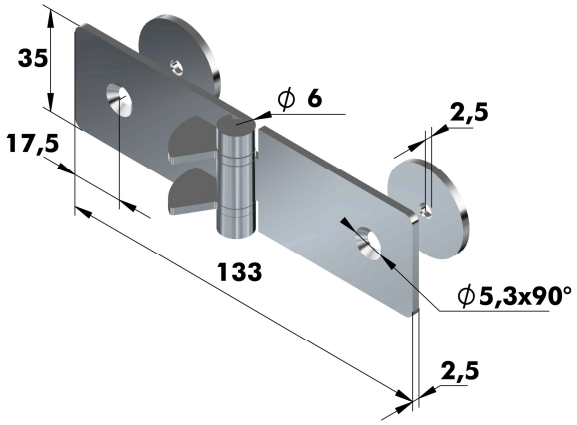

Article no.		
Series	Execution	Material
		Polished
		Stainless steel 1.4301
6052	.01	.33

Art. no.: 6053 (perforated and countersunk)

with fixed pin

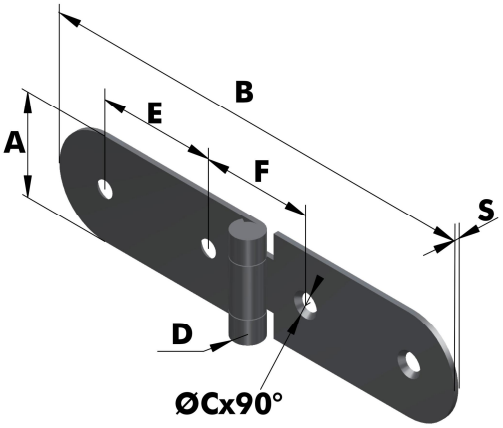

Article no.			Dimensions in mm						
Series	Execution	Material	A	B	C Ø	D	E	F	S
		Raw							
		Steel							
6053	.01	.00	30	130	5,2	6	34	33	1,5
6053	.02	.00	40	190	5,2	8	56	37	2

Art. no.: 6106 (perforated)

with extractable pin

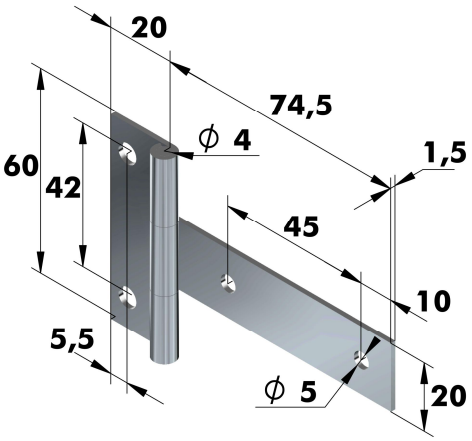

Article no.	
Series	Material
	Polished
	Stainless steel 1.4301
6106	.30

TÜVRheinland ZERTIFIZIERT
Management System ISO 9001:2015 ISO 14001:2015
www.tuv.com ID 9108624624

Further materials and surface finishes on demand. We will be pleased to give you advice.
Phone: +49 (0) 231 / 725 790 -0 eMail: info@hokon-verschlusstechnik.de
Fax: +49 (0) 231 / 725 790 -10 Homepage: www.hokon-verschlusstechnik.de

Hinges

Art. no.: 6109 (perforated and countersunk)
with riveted pin

Article no.		Dimensions in mm
Series	Material Stainless steel 1.4301	Pin Ø
6109	.30	3

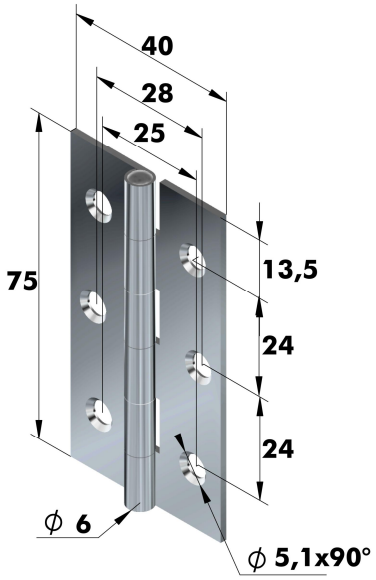

Art.no. 6540 (drilled and countersunk)

Also available as:
Spring hinge see chapter „spring hinges“
Torque- and detent hinge
See chapter „torque and detent hinges“

Article no.			
Series	Execution	Material Aluminium 6060 T5	
		Silver	Black
6540	.01 no plug	.70	.77
6540	.02 with plug	.70	.77

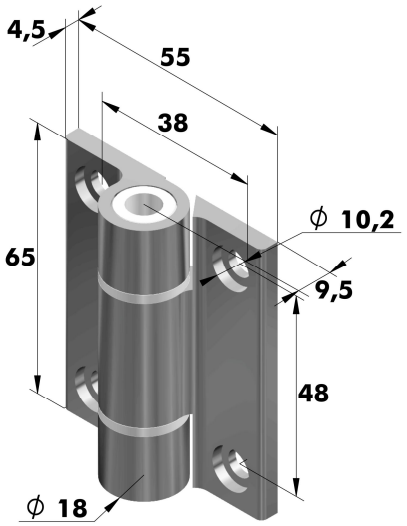

Art.no. 6876 (drilled and countersunk)

Also available:
Spring hinge see chapter „spring hinges“
Torque hinges see chapter „torque and detent hinges“

Article no.			
Series	Execution	Material Aluminium 6060 T5	
		Silver	Black
6876	.08	.71	-
6876	.09	-	.77

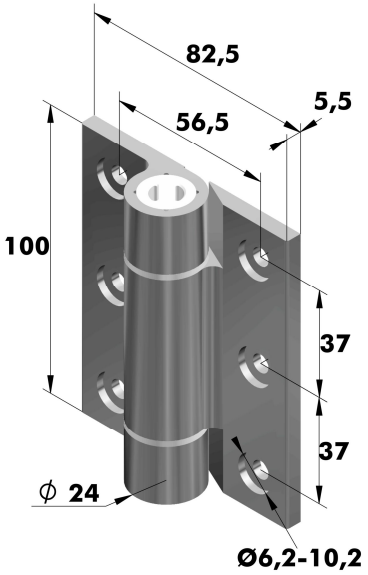

Hinges

Art.no.: 196.5.F37.001.001 (perforated)

with fixed steel pin

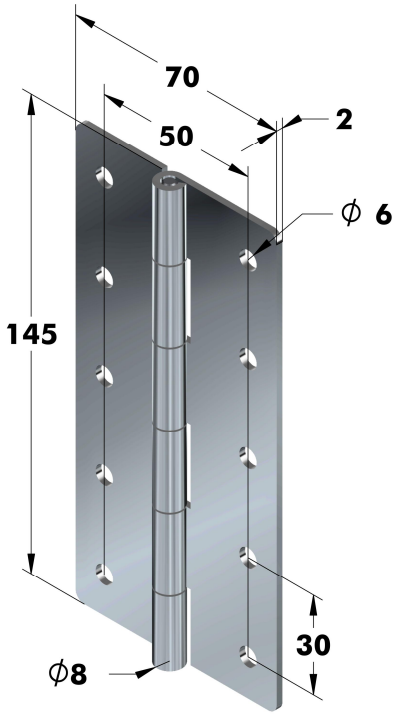

Article no.	
Series	Material
	Zinc plated
	Steel
196.5.F37.001.001	.00

Art.no.: 196.5.F37.001.002 (perforated)

with fixed steel pin

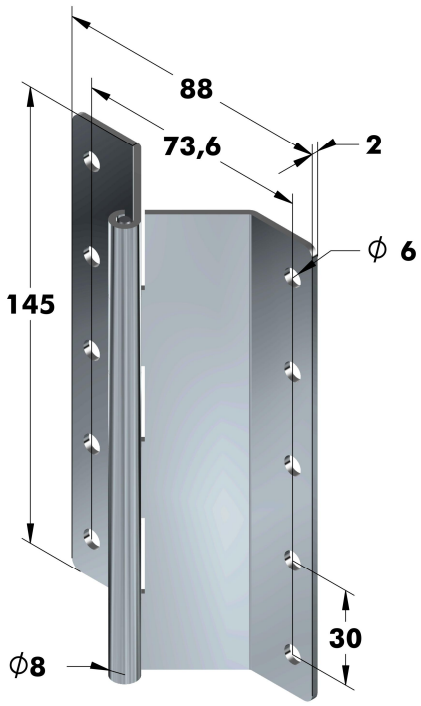

Article no.	
Series	Material
	Zinc plated
	Steel
196.5.F37.001.002	.00

TÜVRheinland ZERTIFIZIERT Management System ISO 9001:2015 ISO 14001:2015 www.tuv.com ID 9108624624

Further materials and surface finishes on demand. We will be pleased to give you advice.
Phone: +49 (0) 231 / 725 790 -0 eMail: info@hokon-verschlusstechnik.de
Fax: +49 (0) 231 / 725 790 -10 Homepage: www.hokon-verschlusstechnik.de

Hinges

Art.no.:99.7651 (perforated and countersunk)
with fixed pin

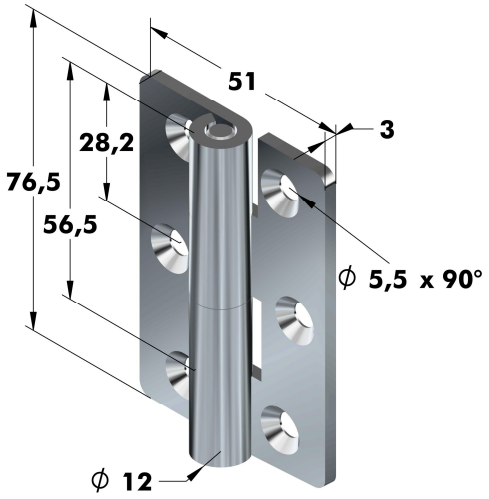

Article no.	
Series	Material
	Stainless steel
	1.4301
99.7651	.30

Art. no.: 6058 tubular hinge
with fixed pin

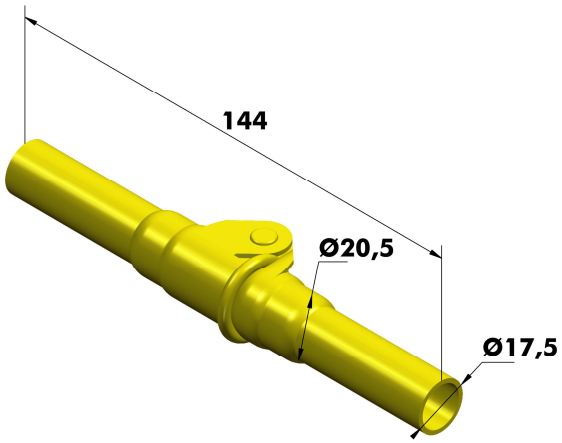

Article no.		
Series	Execution	Material
		Zinc plated yellow chromated
		Steel
6058	.03	.08

Art. no.: 6058
Stop hinge with locking by 105°
with fixed pin (**Ø5**)

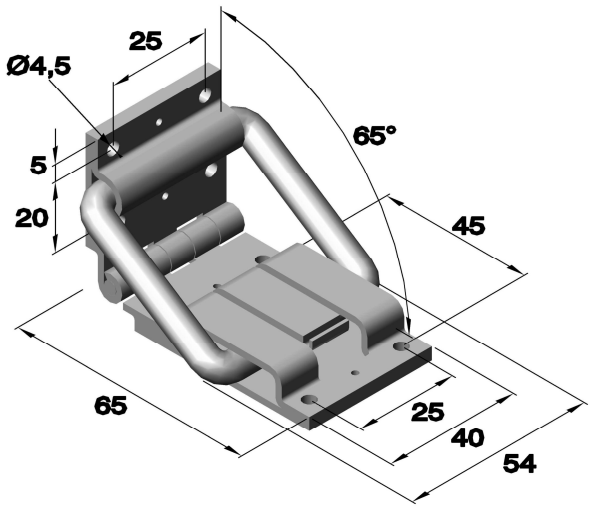

Article no.		
Series	Execution	Material
		Stainless steel
		1.4301
6058	.04	.30

Hinges

Management System
ISO 9001:2015
ISO 14001:2015
TÜVRheinland ZERTIFIZIERT
www.tuv.com ID 9108624624

Further materials and surface finishes on demand. We will be pleased to give you advice.
Phone: +49 (0) 231 / 725 790 -0 eMail: info@hokon-verschlusstechnik.de
Fax: +49 (0) 231 / 725 790 -10 Homepage: www.hokon-verschlusstechnik.de

heavy hinges

Art.No.:99.10080
with fixed stainless steel pin

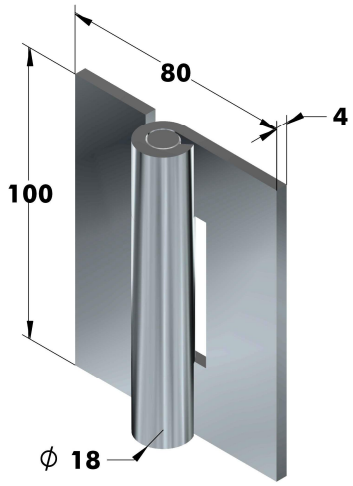

Article no.	
Series	Material
	Raw
	Stainless steel
99.10080	.30

Art.No.:99.1001003
with fixed stainless steel pin

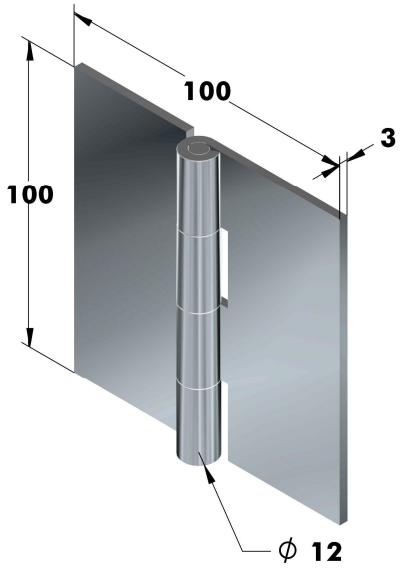

Article no.	
Series	Material
	Raw
	Stainless steel
99.1001003	.30

Art.No.:6054
with riveted stainless steel pin

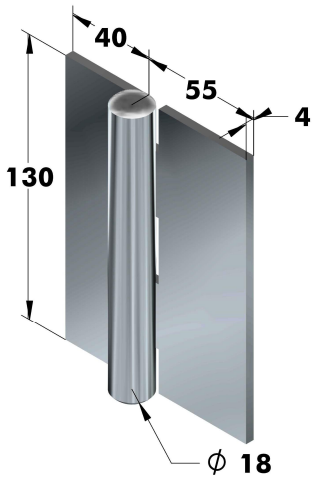

Article no.		
Series	Execution	Material
		Raw
		Steel
6054	.03	.00

heavy hinges

Art.No.:6059 Profile steel hinges with riveted pin

Article no.				Dimensions in mm					
Series	Execution	Material Raw Steel	Material Raw Stainless steel	A	B	D	E	S	Pin Ø
6059	.01	.00	-	32	32	8	4	3	4
6059	.02	.00	-	32	50	8	4	3	4
6059	.03	.00	.30	50	50	8	4	3	4
6059	.04	.00	-	50	80	8	4	3	4
6059	.05	.00	-	50	50	12	6	5	6
6059	.06	.00	.30	50	80	12	6	5	6
6059	.07	.00	-	50	100	8	4	3	4

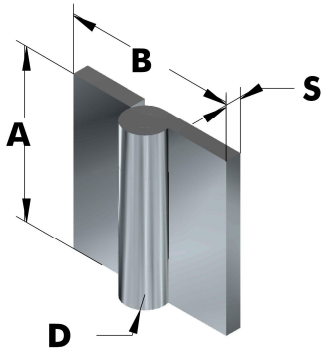

Art.No.:6060 Profile steel hinges with riveted pin

Article no.				Dimensions in mm					
Series	Execution	Material Raw Steel	Material Raw Stainless steel	A	B	D	E	S	Pin Ø
6060	.02	.00	-	50	32	8	4	3	4
6060	.03	.00	.30	50	50	8	4	3	4
6060	.04	-	.30	50	80	8	4	3	4
6060	.05	.00	-	50	50	12	6	5	6
6060	.06	.00	-	50	80	12	6	5	6

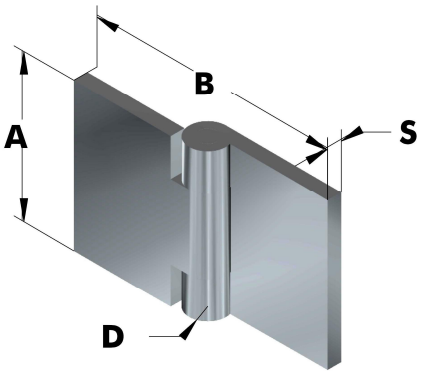

Art.No.:6061 Profile steel hinges with riveted pin

Article no.				Dimensions in mm					
Series	Execution	Material Raw Steel	Material Raw Stainless steel	A	B	D	E	S	Pin Ø
6061	.01	.00	.30	80	80	12	6	5	6
6061	.02	.00	-	80	130	12	6	5	6
6061	.03	.00	-	125	80	12	6	5	6
6061	.04	.00	-	80	80	20	10	8	10
6061	.05	.00	-	80	130	20	10	8	10
6061	.06	.00	-	125	130	20	10	8	10
6061	.08	.00	-	160	130	20	10	8	10
6061	.09	.00	-	200	130	20	10	8	10

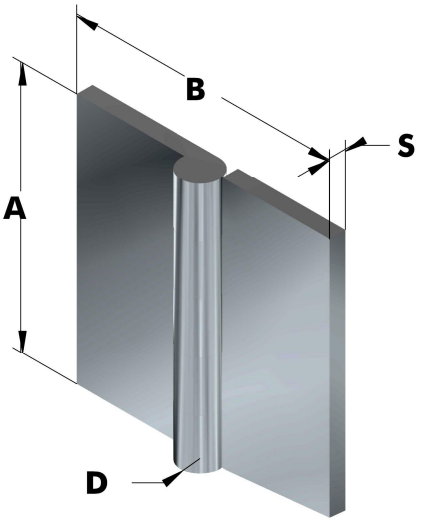

TÜVRheinland ZERTIFIZIERT Management System ISO 9001:2015 ISO 14001:2015 www.tuv.com ID 9108624624

Further Materials and surface finishes on demand. We will be pleased to give you advice.

Phone: +49 (0) 231 / 725 790 -0
Fax: +49 (0) 231 / 725 790 -10
eMail: info@hokon-verschlusstechnik.de
Homepage: www.hokon-verschlusstechnik.de

heavy hinges

Art.No.:99.2453 (perforated)

Knuckle and pin welded.

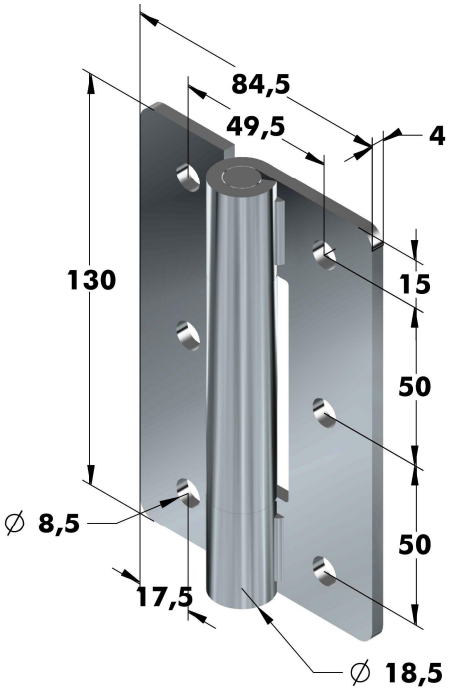

Article no.	
Series	Material
	Galvanised
	Steel
99.2453	.04

Art.No.: 2003278

Knuckle and pin welded.

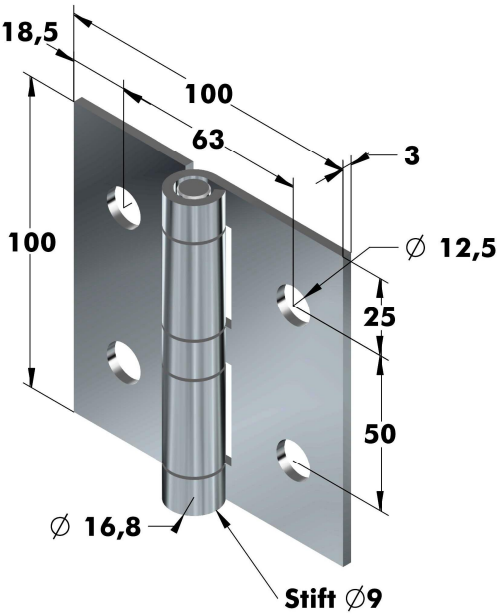

Article no.	
Series	Material
	Polished
	Stainless steel
2003278	

heavy hinges

Art.No.:6024 Profile steel hinges
with extractable brass pin

Execution .02 with 90° stop

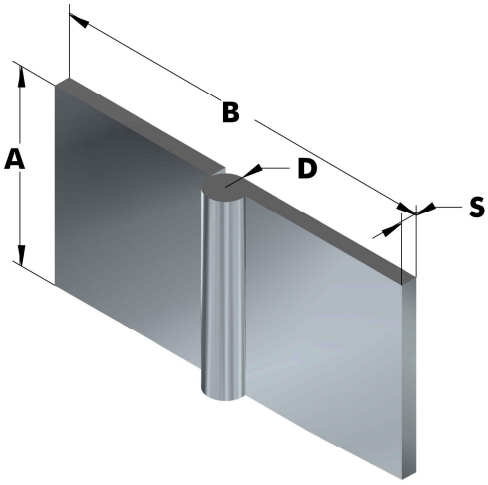

Article no.			Dimensions in mm				
Series	Execution	Material Raw Stainless steel	A	B	D	S	Pin Ø
6024	.01	.30	60	120	12	5	6
6024	.02 (90°)	.30	60	120	12	5	6

Art.No.:6012
with fixed pin, drills on enquiry

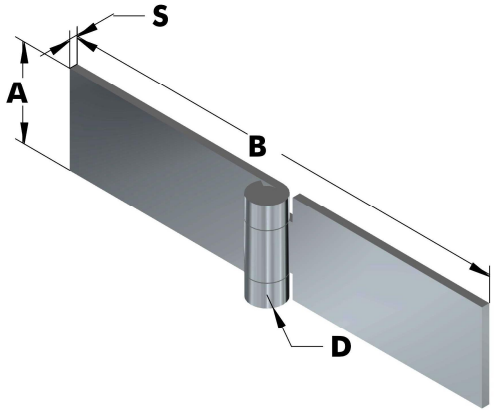

Article no.			Dimensions in mm				
Series	Execution	Material Raw Steel	A	B	D	S	Pin Ø
6012	.01	.00	30	140	11	2,5	6
6012	.02	.00	30	160	12	3	6
6012	.03	.00	30	190	12	3	6
6012	.04	.00	30	220	12	3	6

Art.No.:6014 (drilled and countersunk)
with fixed pin.

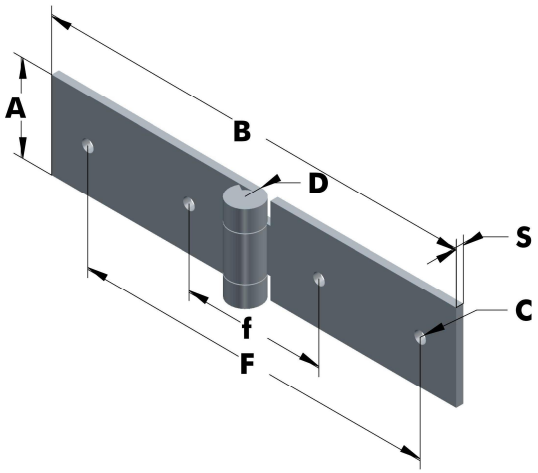

Article no.			Dimensions in mm							
Series	Execution	Material Galvanised Steel	A	B	C Ø	D	F	f	S	Pin Ø
6014	.01	.04	30	140	4	11	115	45	2,5	6
6014	.02	.04	30	160	4	12	133	43	3	6

Management System ISO 9001:2015 ISO 14001:2015 TÜVRheinland ZERTIFIZIERT www.tuv.com ID 9108624624

Further Materials and surface finishes on demand. We will be pleased to give you advice.
Phone: +49 (0) 231 / 725 790 -0 eMail: info@hokon-verschlusstechnik.de
Fax: +49 (0) 231 / 725 790 -10 Homepage: www.hokon-verschlusstechnik.de

Art.No.:6050

with extractable pin and nylon intermediate ring

Article no.			
Series	Execution	Material	
		Raw	Raw
		Steel	Stainless steel
6050	.01	.00	.30

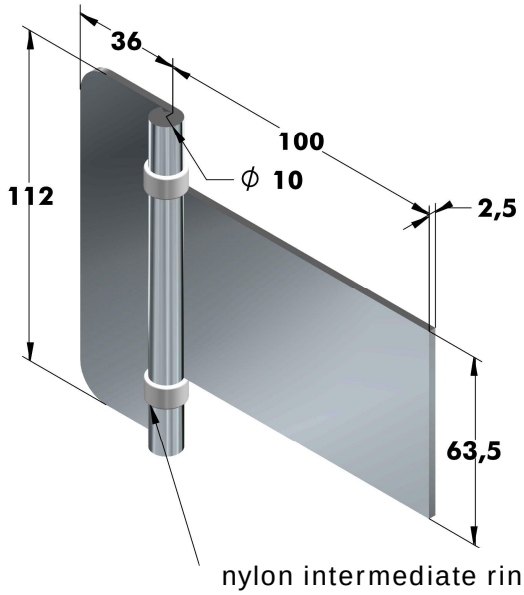

nylon intermediate ring

Art.No.:6050 (perforated)

with extractable pin and nylon intermediate ring

Article no.		
Series	Execution	Material
		Raw
		Stainless steel
6050	.02	.30

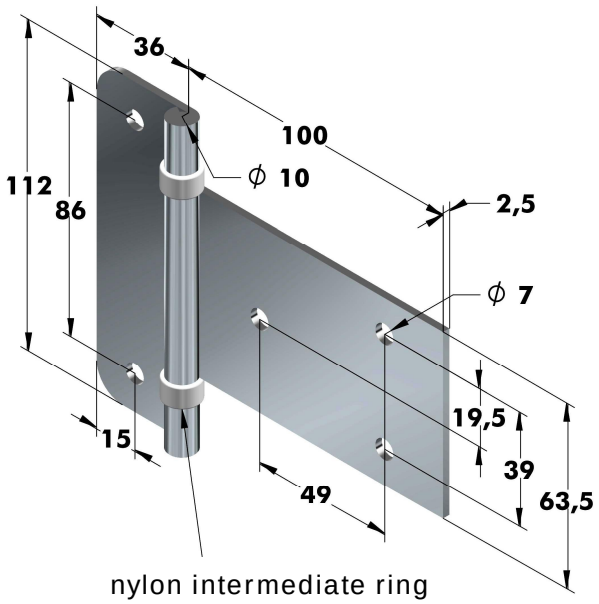

nylon intermediate ring

heavy hinges

Art.No.:6054

with fixed pin.

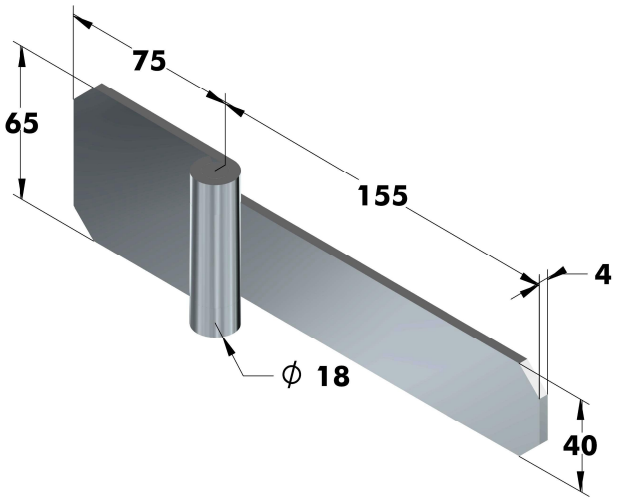

Article no.			
Series	Execution	Material	
		Polished	Raw
		Stainless steel	Steel
6054	.01	.33	-
6054	.01	-	.00

Art.No.:6054

with fixed pin., perforated

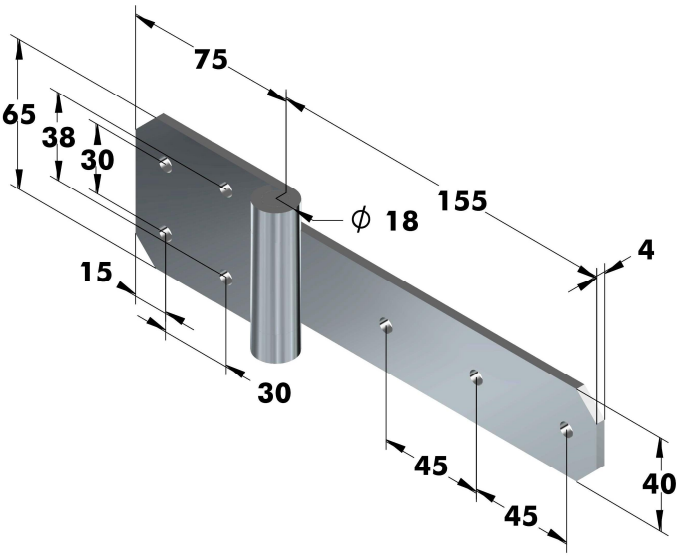

Article no.		
Series	Execution	Material
		Polished
		Stainless steel
6054	.02	.33

Management System ISO 9001:2015 ISO 14001:2015 TÜVRheinland ZERTIFIZIERT www.tuv.com ID 9108624624

Further Materials and surface finishes on demand. We will be pleased to give you advice.
Phone: +49 (0) 231 / 725 790 -0 eMail: info@hokon-verschlusstechnik.de
Fax: +49 (0) 231 / 725 790 -10 Homepage: www.hokon-verschlusstechnik.de

heavy hinges

Art.No.:6158 (perforated)
with fixed pin. (10mm)

Stainless steel(1.4301) on request

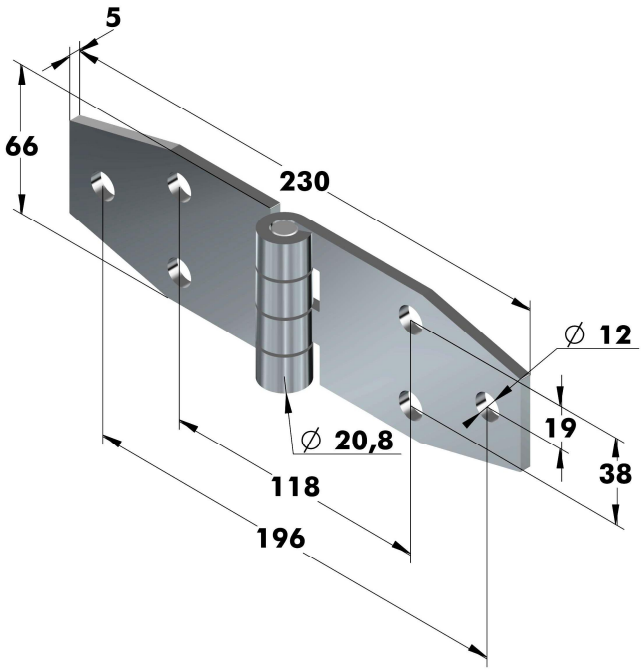

Article no.			
Series	Execution	Material	
		Galvanised	Polished
		Steel	Stainless steel
6158	.01	.04	.33

Art.No.:99.12637 (perforated)
with fixed pin. (10mm)

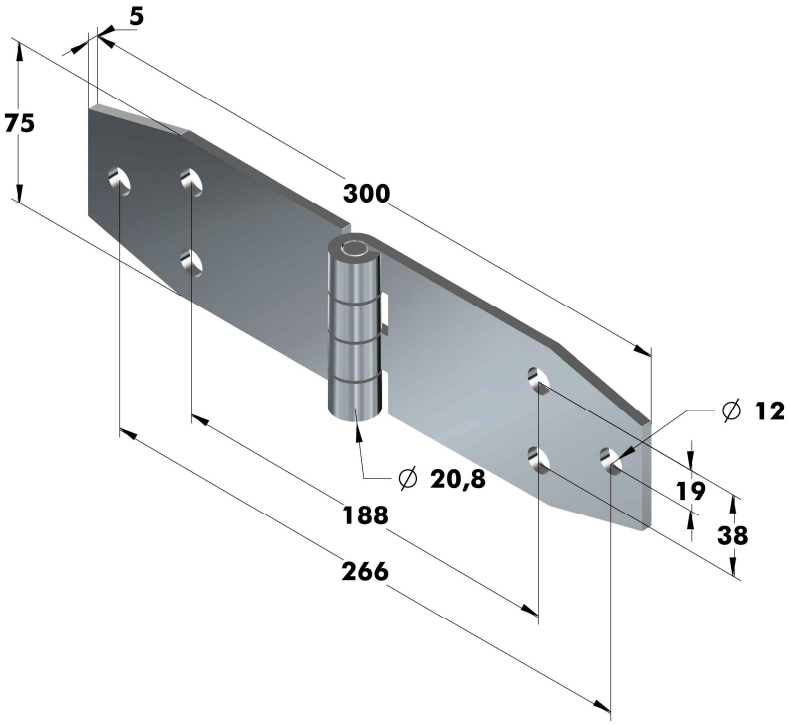

Article no.		
Series	Material	
	Galvanised	Polished
	Steel	Stainless steel
99.12637	.04	.33

heavy hinges

Art.No.:6158 (perforated)
with fixed pin. (10mm)

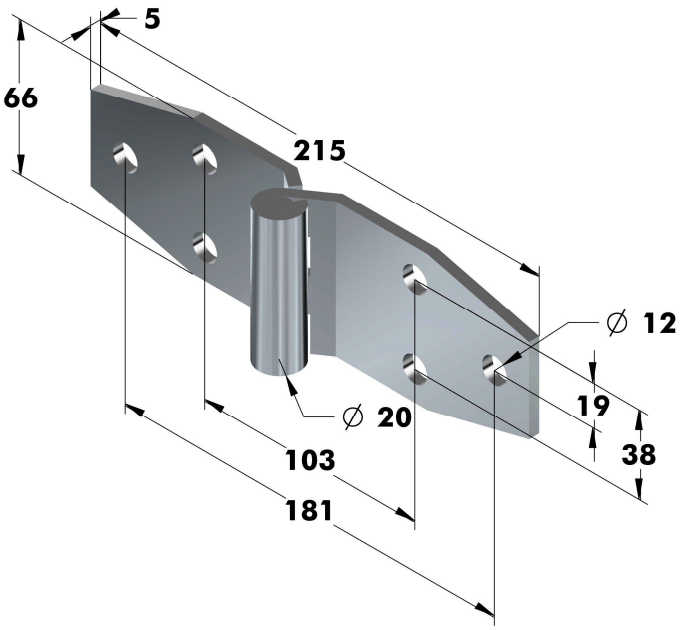

Stainless steel(1.4301) on request

Article no.			
Series	Execution führung	Material	
		Galvanised	Polished
		Steel	Stainless steel
6158	.02	.04	.33

Art.No.: 99.40800B004 (perforated)
with rammed Stainless steel pin

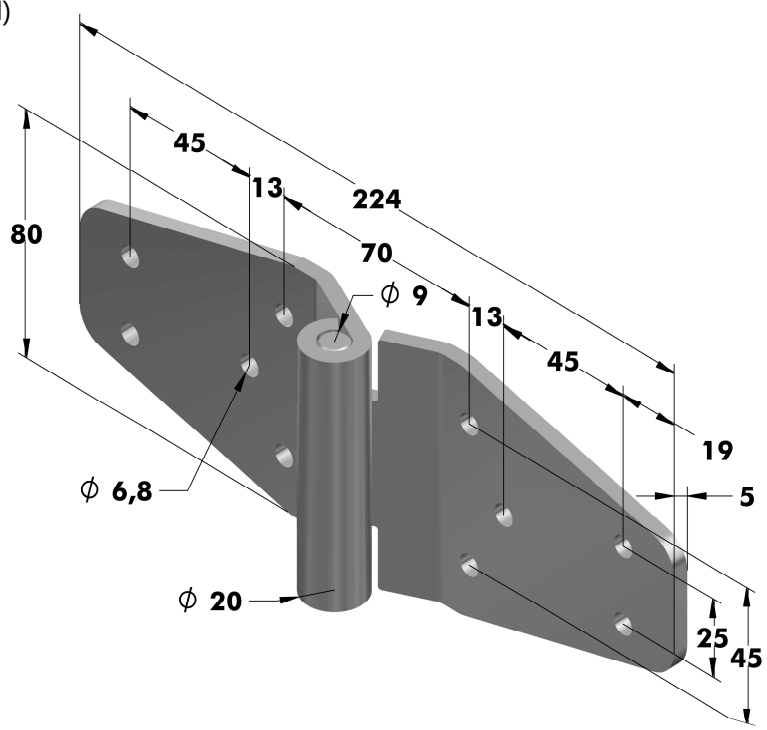

Article no.	
Series	Material
	Galvanized
	Steel
99.40800B004	.04/C

TÜVRheinland ZERTIFIZIERT Management System ISO 9001:2015 ISO 14001:2015 www.tuv.com ID 9108624624

Further Materials and surface finishes on demand. We will be pleased to give you advice.
Phone: +49 (0) 231 / 725 790 -0 eMail: info@hokon-verschlusstechnik.de
Fax: +49 (0) 231 / 725 790 -10 Homepage: www.hokon-verschlusstechnik.de

heavy hinges

Art.No.: 196.3.ST35 (perforated)

Article no.		
Series	Material	
	Galvanised	Polished
	Steel	Stainless steel
196.3.ST35.001	.04	.30

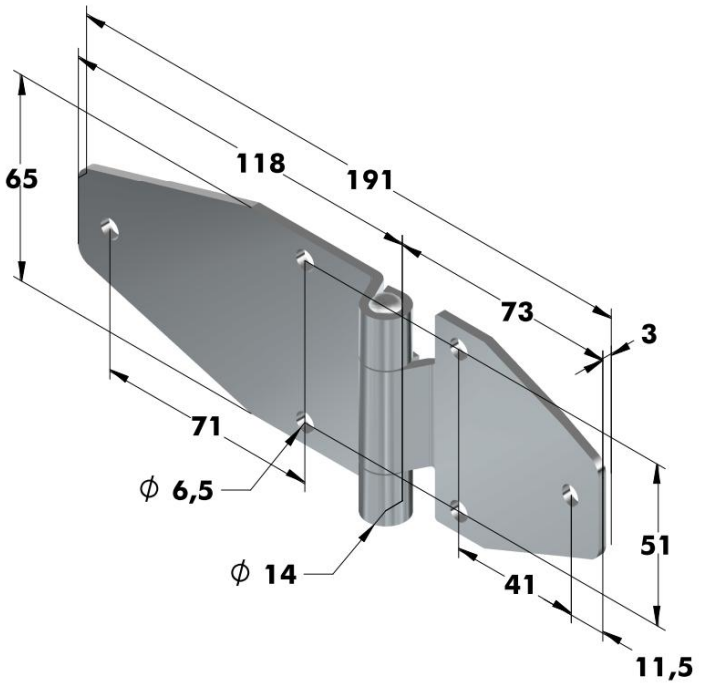

Art.No.:99.1001404.00 (perforated)

with fixed steel pin

Article no.	
Series	Material
	Raw
	Steel
99.1001404	.00

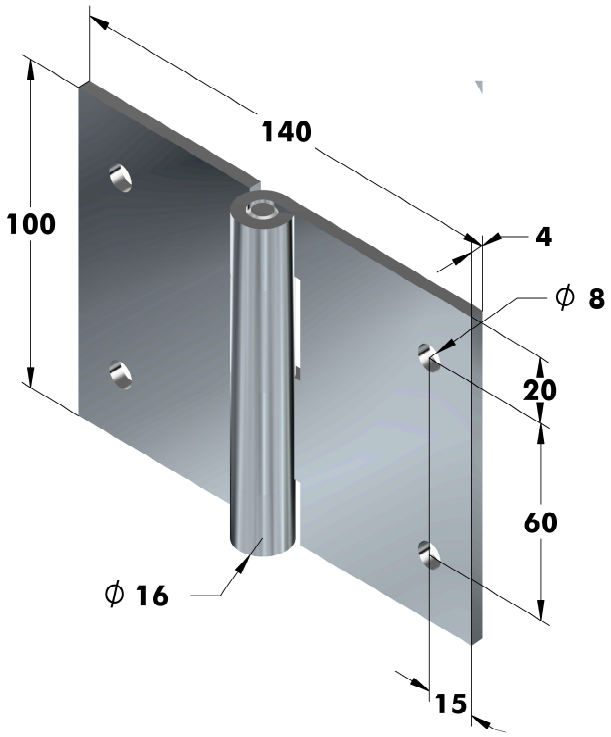

heavy hinges

Art.No.: 196.3.ST56.001 (perforated)

Article no.	
Series	Material
	black
	Steel
196.3.ST56.001	.07

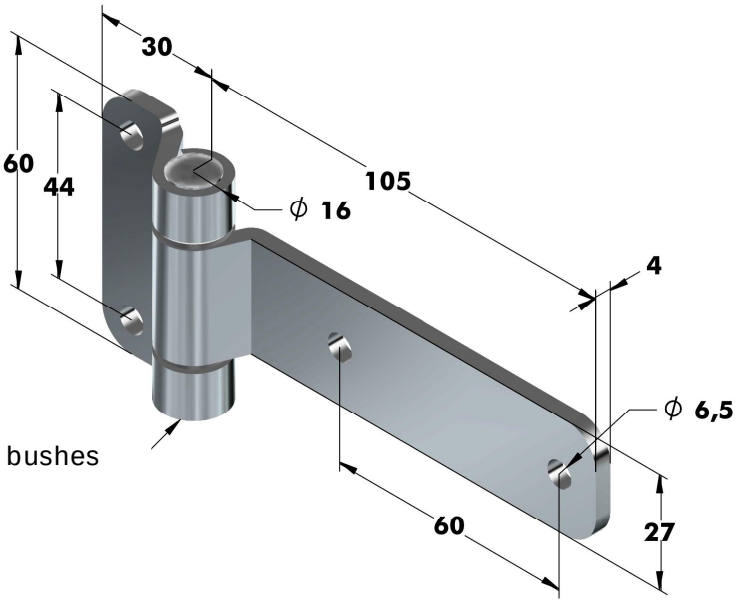

with plastic bushes

Art.No.: 196.3.ST56.100. (perforated)

Article no.	
Series	Material
	black
	Steel
196.3.ST56.100	.04

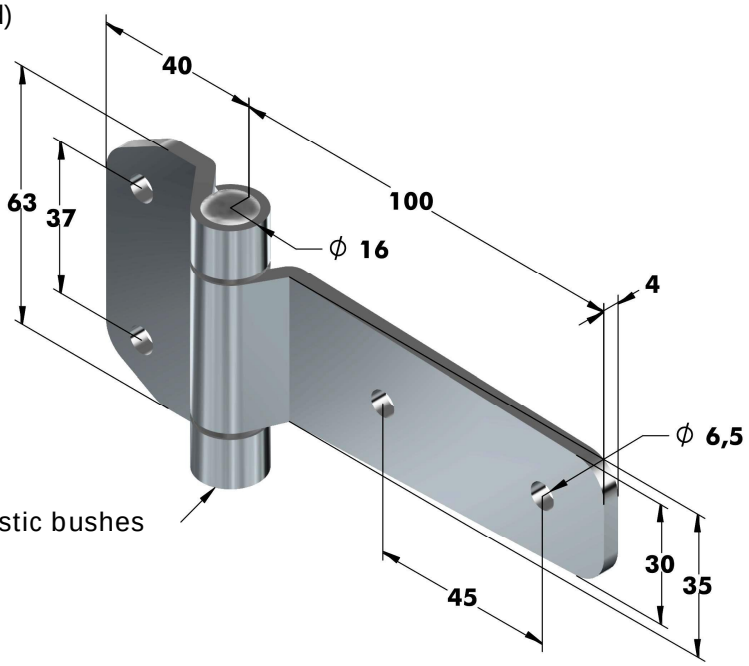

with plastic bushes

Management System ISO 9001:2015 ISO 14001:2015 TÜVRheinland ZERTIFIZIERT www.tuv.com ID 9108624624

Further Materials and surface finishes on demand. We will be pleased to give you advice.
Phone: +49 (0) 231 / 725 790 -0 eMail: info@hokon-verschlusstechnik.de
Fax: +49 (0) 231 / 725 790 -10 Homepage: www.hokon-verschlusstechnik.de

heavy hinges

Art.No. 6877.01.30 (perforated)

Soft-Closing Hinge
Opens and closes damped
Function until 115° guaranteed
Torque per pair: 2,2 to 3,0 N.m

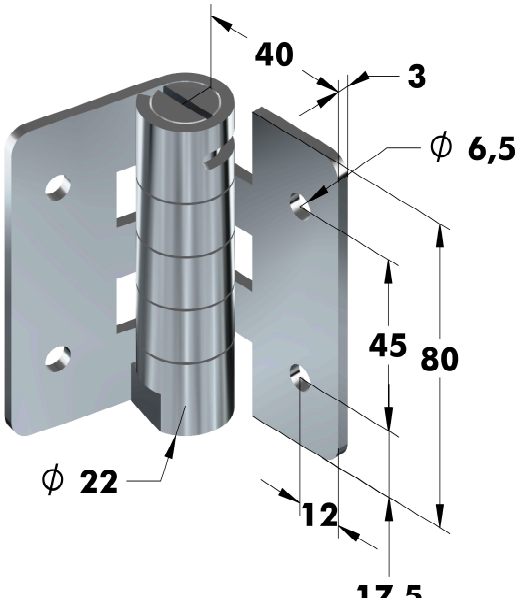

Article no.		
Series	Execution	Material Raw Stainless steel
6877	.01	.30

Welded joints „AG“ with fixed steel pin

FES on self-lubrificating bushes and with brass intermediate ring.

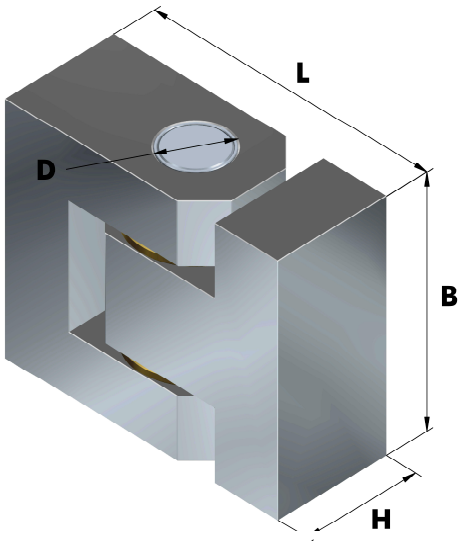

Article no.					Dimensions in mm			
Series	L	Execution	Material Raw Steel	Stainless steel	B	H	D	Load capacity ca. in kg
AG	60	FES	.00	.30	50	20	10	1000
AG	70	FES	.00	.30	60	25	12	4000
AG	80	FES	.00	.30	60	30	15	5000
AG	100	FES	.00	.30	80	40	20	9000
AG	120	FES	.00	.30	100	50	25	10000
AG	140	FES	.00	.30	120	60	30	10000+

Weld on hinge rolls „AB“ 3-part

AES with extractable steel pin and brass intermediate ring
AMS with extractable brass pin and brass intermediate ring

Article no.					Dimensions in mm			
Series	L	Execution		Material Raw Steel	D	B	Pin Ø	Load capacity ca. in kg
AB	135/3	AES	AMS	.00	18	22,5	12	790
AB	150/3	AES	AMS	.00	20	25,5	13	960
AB	180/3	AES	AMS	.00	20	25,5	13	1300
AB	200/3	AES	AMS	.00	23	29	16	2000

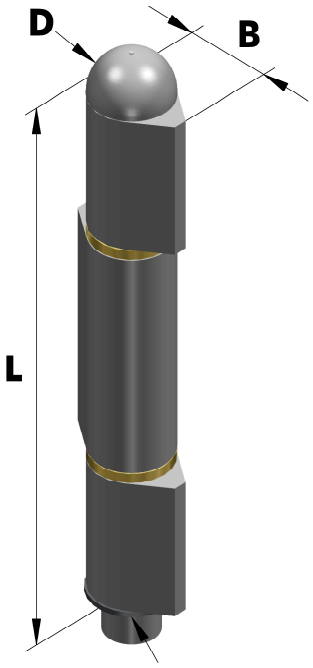

safety washer

Weld on hinge rolls „AB“ 3-part

AVS with extractable stainless steel pin and brass intermediate ring

Article no.				Dimensions in mm			
Series	L	Execution	Material Raw Stainless steel (V2A)	D	B	Pin Ø	Load capacity ca. in kg
AB	135/3	AVS	.30	18	22,5	12	790
AB	150/3	AVS	.30	20	25,5	13	960
AB	180/3	AVS	.30	20	25,5	13	1300

Weld on hinge rolls „ABN“ 3-part with Schmiernippel

AMS with extractable brass pin and brass intermediate ring

Article no.				Dimensions in mm			
Series	L	Execution	Material Raw Steel	D	B	Pin Ø	Load capacity ca. in kg
ABN	135/3	AMS	.00	18	22,5	12	790
ABN	150/3	AMS	.00	20	25,5	13	960
ABN	180/3	AMS	.00	20	25,5	13	1300
ABN	200/3	AMS	.00	23	29	16	2000

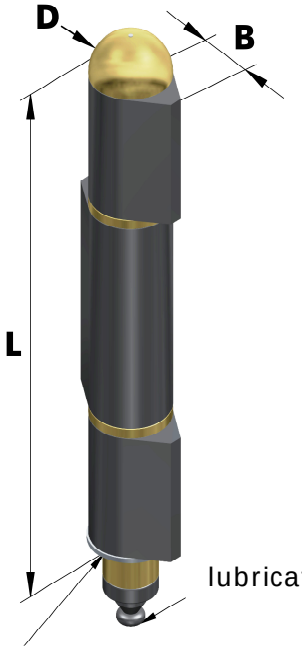

lubrication nipples
safety washer

Management System ISO 9001:2015 ISO 14001:2015 TÜVRheinland ZERTIFIZIERT www.tuv.com ID 9108624624

Further Materials and surface finishes on demand. We will be pleased to give you advice.
Phone: +49 (0) 231 / 725 790 -0 eMail: info@hokon-verschlusstechnik.de
Fax: +49 (0) 231 / 725 790 -10 Homepage: www.hokon-verschlusstechnik.de

heavy hinges

Weld on hinge rolls „AB“ 3-part with 2 ball bearings

AES with extractable steel pin and 2 ball bearings
AMS with extractable brass pin and 2 ball bearings

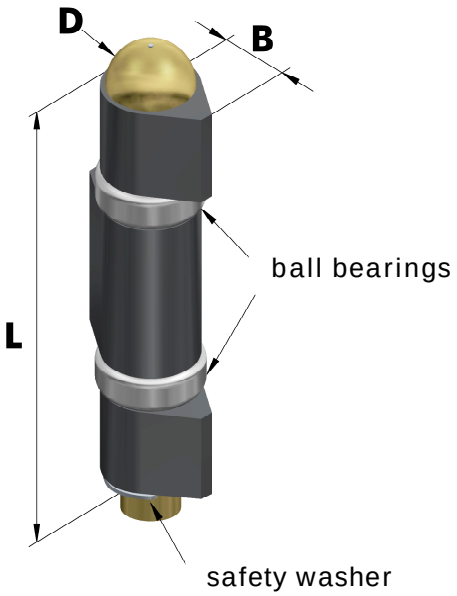

Article no.					Dimensions in mm			
Serie	L	Ausführung		Material Raw Steel	D	B	Pin Ø	ca.kg
AB	90/3	AES	AMS	.00	20	25,5	12	900
AB	110/3	AES	AMS	.00	23	29	13	1000

Hinge as required

„with“ or „without“ ball bearing

Art.No.:99.

„with“ or „without“ ball bearing

(as required perforated)

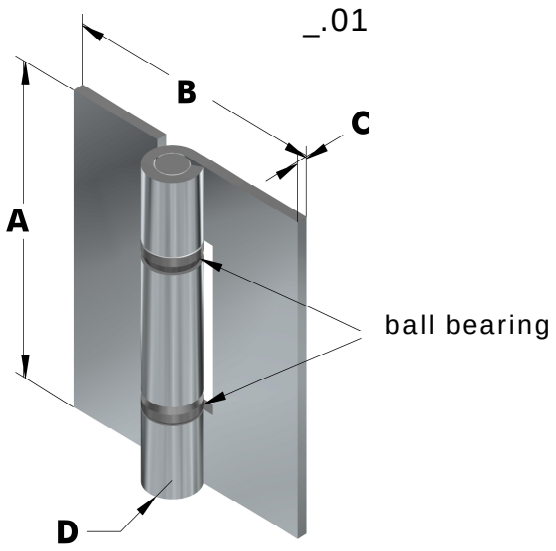

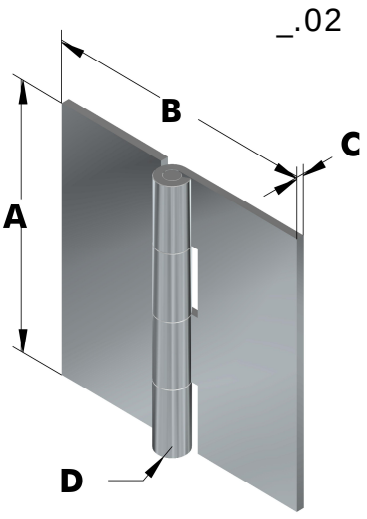

Article no.								
Series	A	B	C	D	Execution		Material	
					Ball bearing		Raw	Polished
					with	without	Stainless steel	Stainless steel
99.	from 60-300	from 60-150	from 3-5	from 12-20	.01	.02	.30	.33

Ordering example:

Art.No: 99. 1001003 .01 / .02 .04 / .30

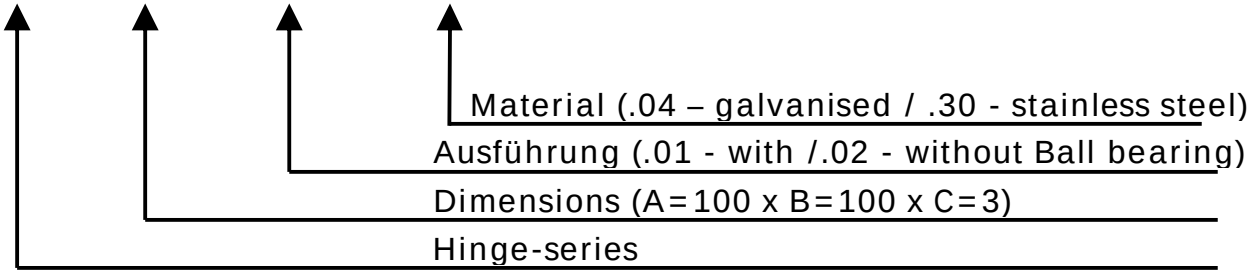

Management System ISO 9001:2015 ISO 14001:2015 TÜVRheinland ZERTIFIZIERT www.tuv.com ID 9108624624

Further Materials and surface finishes on demand. We will be pleased to give you advice.
Phone: +49 (0) 231 / 725 790 -0 eMail: info@hokon-verschlusstechnik.de
Fax: +49 (0) 231 / 725 790 -10 Homepage: www.hokon-verschlusstechnik.de

Individual parts for self made hinges

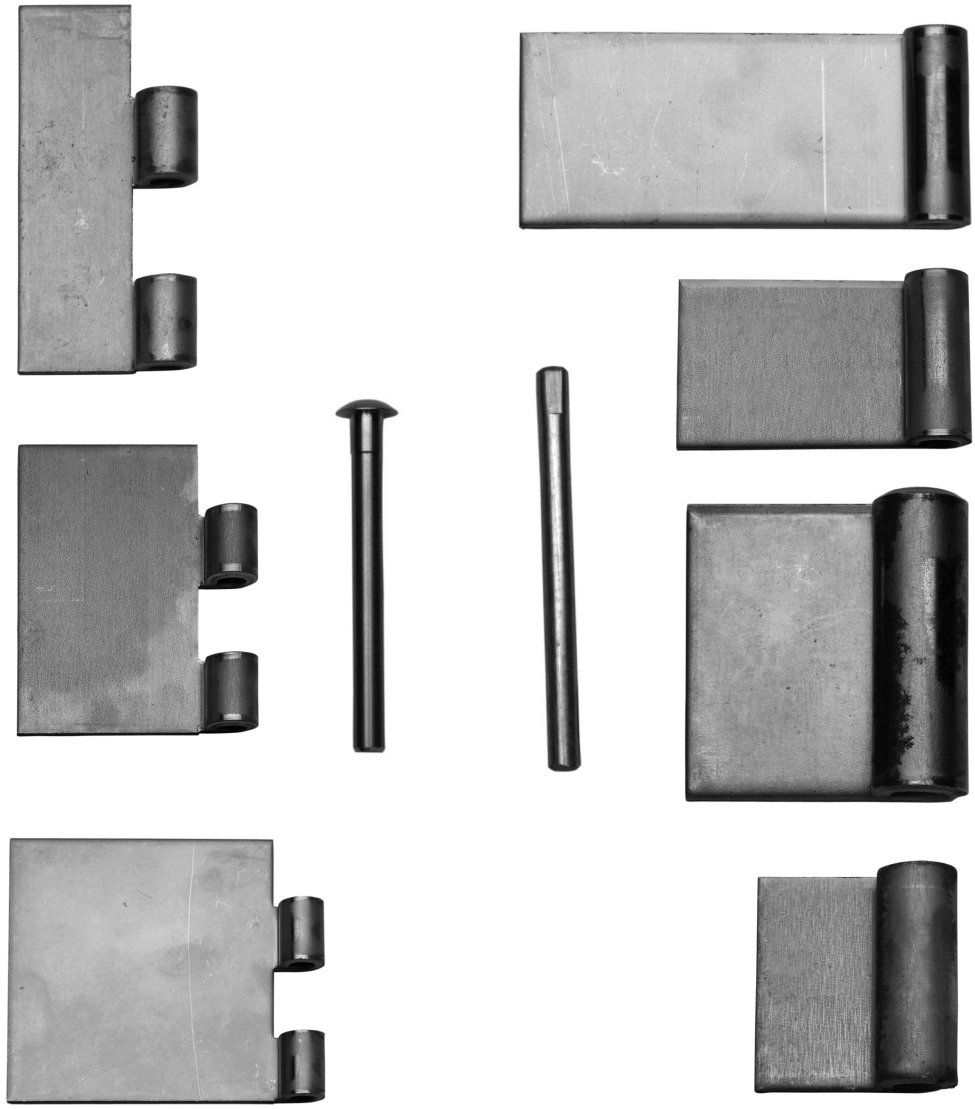

Individual parts for selfmade hinges

Materials and surface finishes:

.00	raw steel (1.1203)
.01	nickel-plated
.02	brassed
.03	chromated
.04	zinc plated steel
.05	bronzed
.06	black zinc plated
.07	blued
.08	yellow chromated
.09	EPD (Electrophoretic deposition)
.10	anodized silver-coloured
.30	raw stainless steel (1.4301)
.33	polished stainless steel
.35	raw stainless steel (1.4401)

Hinge combinations - example

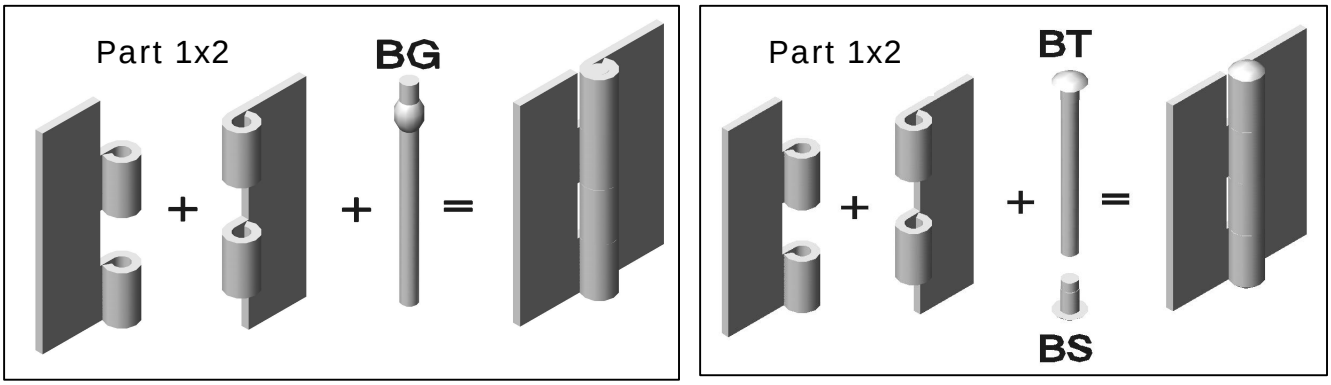

BG	jolted pin
BT	pin with head
BS	plug

Drilling and assembly on request.

Ordering example:

Art.no. 6110 . 04/30

Material (steel / stainless steel)

Hinge series/ pin series

Further materials and surface finishes on demand. We will be pleased to give you advice.
Phone: +49 (0) 231 / 725 790 -0 eMail: info@hokon-verschlusstechnik.de
Fax: +49 (0) 231 / 725 790 -10 Homepage: www.hokon-verschlusstechnik.de

Individual parts for self made hinges

Hinge module 3 mm

Article no.			Dimensions in mm				
Series	Material		L	B	S	Pin Ø	D
	Steel	Stainless steel					
	Raw	1.4301					
6110	.00	-	80	30	3	6	12
6111	-	.30	80	30	3	6	12
6112	.00	-	80	40	3	6	12
6113	-	.30	80	40	3	6	12
6114	.00	-	80	50	3	6	12
6115	-	.30	80	50	3	6	12
6116	.00	-	80	60	3	6	12
6117	-	.30	80	60	3	6	12
6118	.00	-	80	80	3	6	12
6119	-	.30	80	80	3	6	12

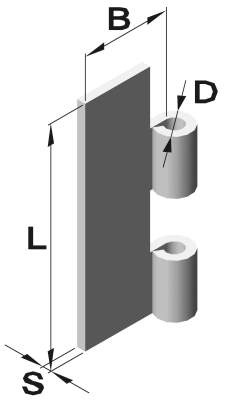

Hinge module 4 mm

Article no.			Dimensions in mm				
Series	Material		L	B	S	Pin Ø	D
	Steel	Stainless steel					
	Raw	1.4301					
6130	.00	-	100	30	4	8	16
6131	-	.30	100	30	4	8	16
6132	.00	-	100	40	4	8	16
6133	-	.30	100	40	4	8	16
6134	.00	-	100	50	4	8	16
6135	-	.30	100	50	4	8	16
6136	.00	-	100	60	4	8	16
6137	-	.30	100	60	4	8	16
6138	.00	-	100	80	4	8	16
6139	-	.30	100	80	4	8	16

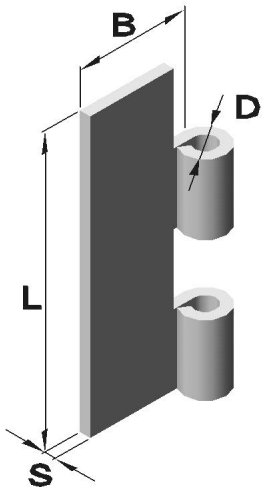

Hinge module 5 mm

Article no.			Dimensions				
Series	Material		L	B	S	Pin Ø	D
	Steel	Stainless steel					
	Raw	1.4301					
6149	.00	-	120	30	5	10	20
6140	-	.30	120	30	5	10	20
6141	.00	-	120	40	5	10	20
6142	-	.30	120	40	5	10	20
6143	.00	-	120	50	5	10	20
6144	-	.30	120	50	5	10	20
6145	.00	-	120	60	5	10	20
6146	-	.30	120	60	5	10	20
6147	.00	-	120	80	5	10	20
6148	-	.30	120	80	5	10	20

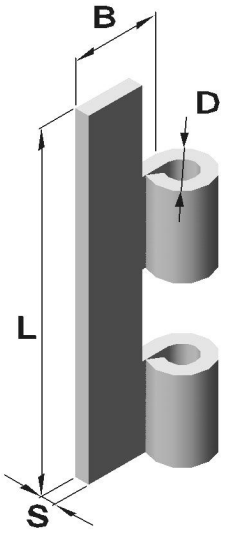

Individual parts for self made hinges

Hinge hook combinations - example

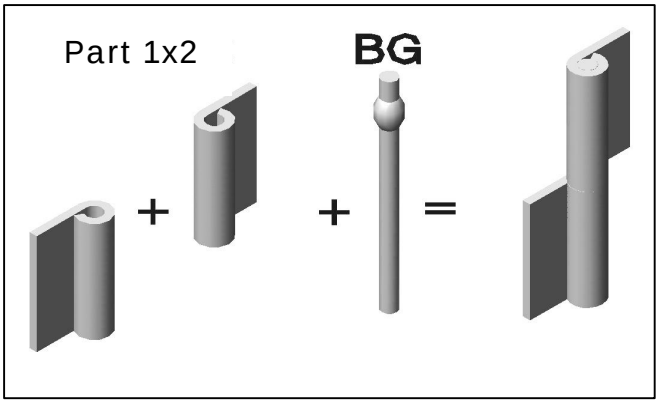

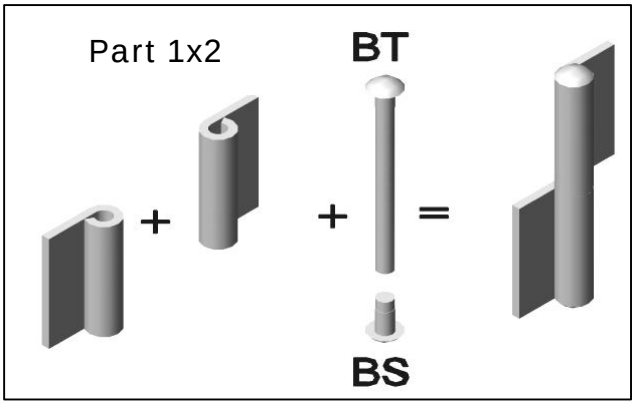

BG joled pin
BT pin with head
BS plug

Drilling and assembly on request.

Ordering example:
Art.no. 6210. 01. 04/30

- 6210 – Hinge hook series
- 01 – Execution
- 04/30 – Material (zinc plated / stainless steel)

Hinge hook module 3 mm

Article no.				Dimensions in mm				
Series	Execution	Material		L	B	S	Pin Ø	D
		Steel	Stainless steel					
		Raw	1.4301					
6210	.01	.00	.30	40	20	3	6	12
6210	.03	.00	.30	40	30	3	6	12
6210	.05	.00	.30	40	50	3	6	12
6210	.07	.00	.30	40	80	3	6	12
6210	.09	.00	.30	40	120	3	6	12

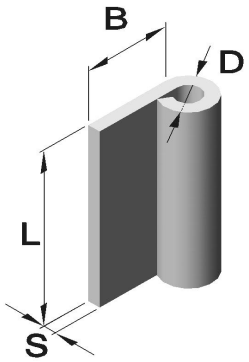

Hinge hook module 4 mm

Article no.				Dimensions in mm				
Series	Execution	Material		L	B	S	Pin Ø	D
		Steel	Stainless steel					
		Raw	1.4301					
6210	.21	.00	.30	50	30	4	8	16
6210	.23	.00	.30	50	50	4	8	16
6210	.25	.00	.30	50	80	4	8	16

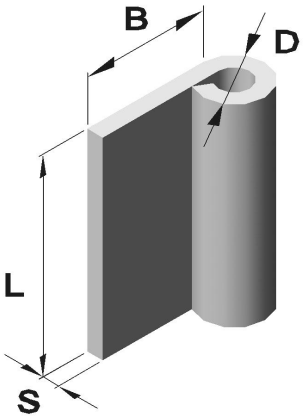

TÜVRheinland ZERTIFIZIERT
Management System ISO 9001:2015 ISO 14001:2015
www.tuv.com ID 9108624624

Further materials and surface finishes on demand. We will be pleased to give you advice.
Phone: +49 (0) 231 / 725 790 -0 eMail: info@hokon-verschlusstechnik.de
Fax: +49 (0) 231 / 725 790 -10 Homepage: www.hokon-verschlusstechnik.de

Individual parts for self made hinges

Hinge hook module 5 mm

Article no.				Dimensions in mm				
Series	Execution	Material		L	B	S	Pin Ø	D
		Steel	Stainless steel					
		Raw	1.4301					
6210	.31	.00	.30	60	40	5	10	20
6210	.33	.00	.30	60	60	5	10	20
6210	.35	.00	.30	60	80	5	10	20

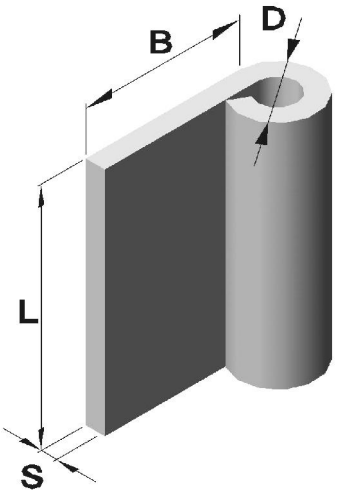

Pin „BG“ - jolted

Article no.			Dimensions in mm	
Series	Material		L	D Ø
	Steel	Stainless steel		
	Zinc plated	1.4301		
6150	.04	-	80	6
6151	-	.30	80	6
6152	.04	-	100	8
6153	-	.30	100	8
6154	.04	-	120	10
6155	-	.30	120	10

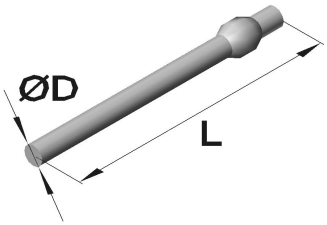

Pin „BT“ - with head

Article no.			Dimensions in mm			
Series	Material		D Ø	L	F	E
	Steel	Stainless steel				
	Zinc plated	1.4301				
6160	.04	-	6	66	3	12
6161	-	.30	6	66	3	12
6162	.04	-	8	86	4	16
6163	-	.30	8	86	4	16
6164	.04	-	10	106	5	20
6165	-	.30	10	106	5	20

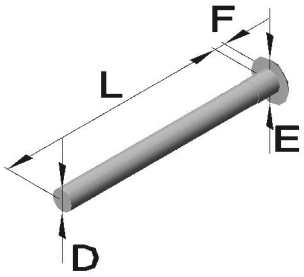

Plug „BS“ - with head

Article no.			Dimensions in mm			
Series	Material		D Ø	L	F	E
	Zinc plated	1.4301				
6170	.04	-	6	12	3	12
6171	-	.30	6	12	3	12
6172	.04	-	8	12	4	16
6173	-	.30	8	12	4	16
6174	.04	-	10	12	5	20
6175	-	.30	10	12	5	20

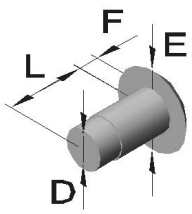

Individual parts for self made hinges

TÜVRheinland ZERTIFIZIERT
Management System
ISO 9001:2015
ISO 14001:2015
www.tuv.com
ID 9108624624

Further materials and surface finishes on demand. We will be pleased to give you advice.
Phone: +49 (0) 231 / 725 790 -0 eMail: info@hokon-verschlusstechnik.de
Fax: +49 (0) 231 / 725 790 -10 Homepage: www.hokon-verschlusstechnik.de

Spring hinges


Art.:6062


Art.:6063


Art.:6064


Art.:6065


Art.:6066


Art.:6067


Art.:6068


Art.:6164


Art.:6165


Art.:6166


Art.:6105


Art.:6169


Art.:6167


Art.:6486


Art.:6088


Art.:6872


Art.:6876

Spring hinges

with adjustable spring force



Art.: 158.I-5524



Art.:158.5334



Art.: 158.I-5124



Art.:158.5224



Art.:158.5314



Art.:158.5814



Art.:158.6117



Art.:158.6117



Art.:158.6314



Art.:158.5414

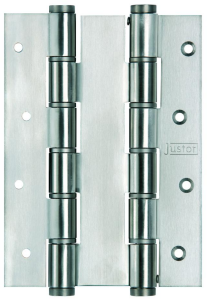

Art.:158.5914

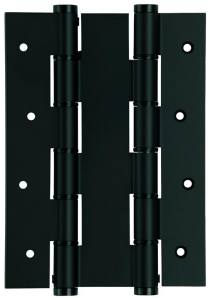

Art.:158.5914



Art.:158.5414

Further materials and surface finishes on demand. We will be pleased to give you advice.
Phone: +49 (0) 231 / 725 790 -0 eMail: info@hokon-verschlusstechnik.de
Fax: +49 (0) 231 / 725 790 -10 Homepage: www.hokon-verschlusstechnik.de

Spring hinges

Rotating direction of the hinge

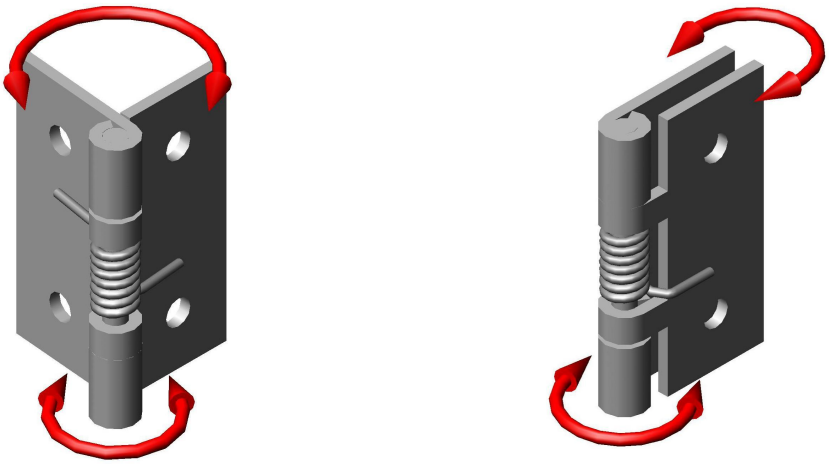

Pressure direction of the hinge

Execution_.01	Execution _.02
(mounted self opening spring)	(mounted self closing spring)

F = Force of the spring on a point at a distance of 100 mm from the axis of the hinge.
Through rotation you become a linear force increase, that can be measured in grams.
Starting position / Delivery status = 0°

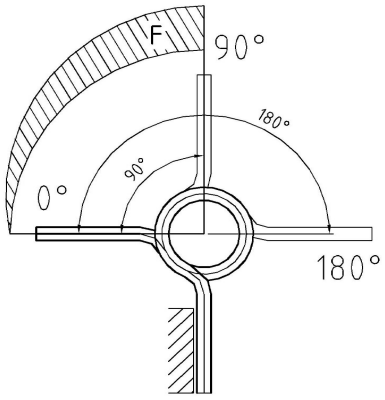

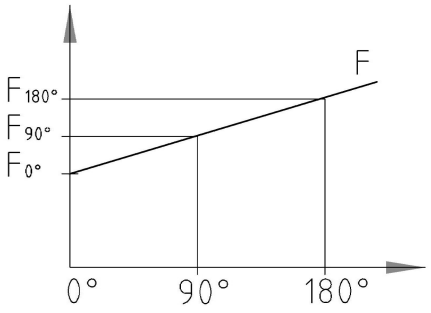

F = spring force

F (0°) = 50 g
F (90°) = 100 g
F (180°) = 150 g

Spring hinges

Materials and surface finishes:

.00	raw steel (1.1203)
.01	nickel-plated
.02	brassed
.03	chromated
.04	zinc plated steel
.05	bronzed
.06	black zinc plated
.07	blued
.08	yellow chromated
.09	EPD (Electrophoretic deposition)
.10	anodized silver-coloured
.20	raw brass
.22	polished brass
.23	chromated brass
.30	raw stainless steel (1.4301)
.33	polished stainless steel
.35	raw stainless steel (1.4401)
.50	raw Zamak (zinc aluminium magnesium copper)
.70	raw aluminium
.71	aluminium silver anodized
.72	aluminium gold anodized
.73	aluminium bronze anodized
.76	aluminium white anodized
.77	aluminium black anodized
.80	raw polyamide

Ordering example:

Art.no 6001 01/02 04/30.F18

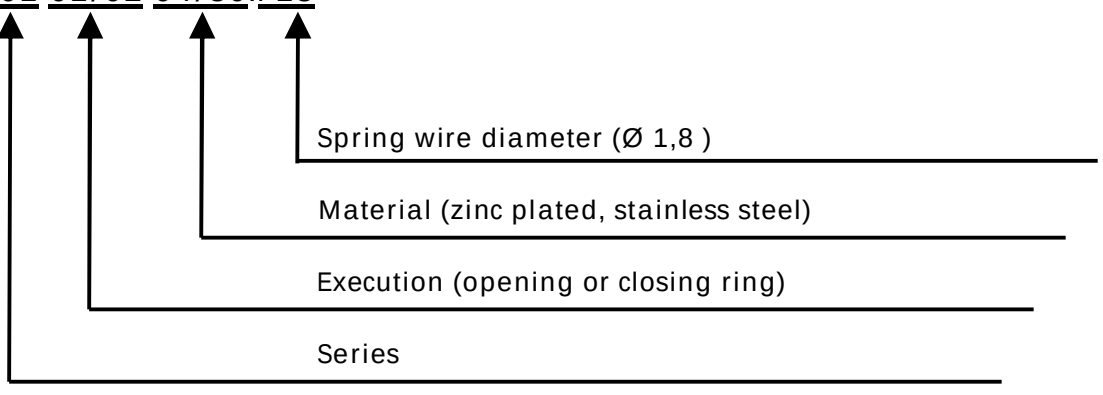

TÜVRheinland ZERTIFIZIERT Management System ISO 9001:2015 ISO 14001:2015 www.tuv.com ID 9108624624

Further materials and surface finishes on demand. We will be pleased to give you advice.
Phone: +49 (0) 231 / 725 790 -0 eMail: info@hokon-verschlusstechnik.de
Fax: +49 (0) 231 / 725 790 -10 Homepage: www.hokon-verschlusstechnik.de

Spring hinges

Art. no.: 6062 (drilled and countersunk)

Tension spring made of stainless steel spring

Article no.				Elastic force in g		
Series	Execution	Material		0°	90°	180°
		Raw	Stainless steel			
		Steel	1.4301			
6062	.01	.00	.30	60	90	120
6062	.02	.00	.30	60	90	120

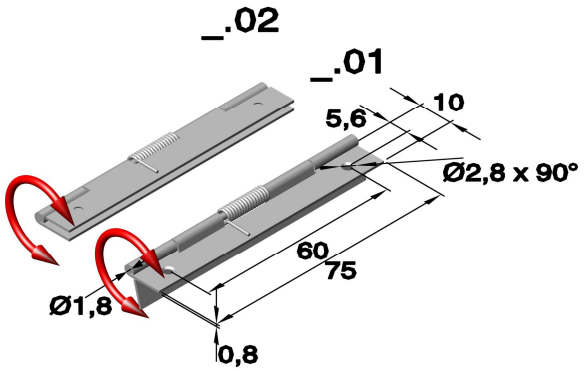

Art. no.: 6063

Tension spring made of steel or stainless steel.

Article no.				Elastic force in g		
Series	Execution	Material		0°	90°	180°
		Raw	Stainless steel			
		Steel	1.4301			
6063	.01	.00	.30	60	90	120
6063	.02	.00	.30	60	90	120

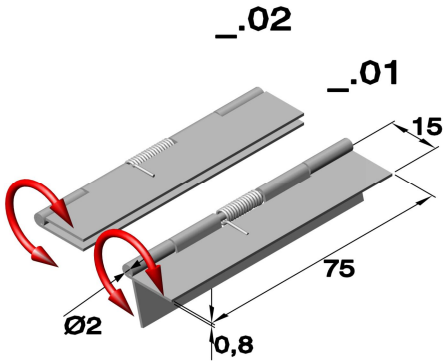

Art. no.: 6064 (drilled)

.01 / .02-tension spring made of steel.
.03 / .04-tension spring made of stainless steel

Article no.				Elastic force in g		
Series	Execution		Material	0°	90°	180°
			Raw			
	Steel spring	Stainless steel spring	Steel			
6064	.01	.03	.00	45	70	90
6064	.02	.04	.00	45	70	90

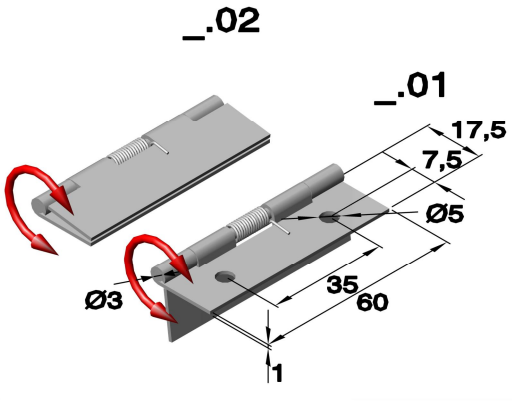

Art. no.: 6065 (drilled)

Tension spring made of steel or stainless steel.

Article no.			Elastic force in g		
Series	Execution	Material	0°	90°	180°
		Stainless steel			
		1.4301			
6065	.01	.30	40	60	80
6065	.02	.30	40	60	80

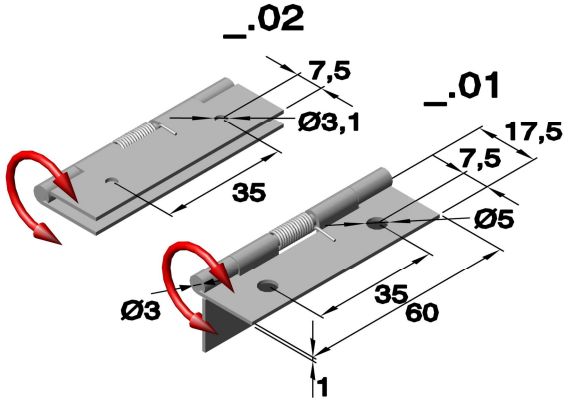

Spring hinges

Art. no.: 6066 (drilled)

Tension spring made of stainless steel.

Article no.				Elastic force in g		
Series	Execution	Material		0°	90°	180°
		Raw	Stainless steel			
		Steel	1.4301			
6066	.01	.00	.30	550	750	950
6066	.02	.00	.30	550	750	950

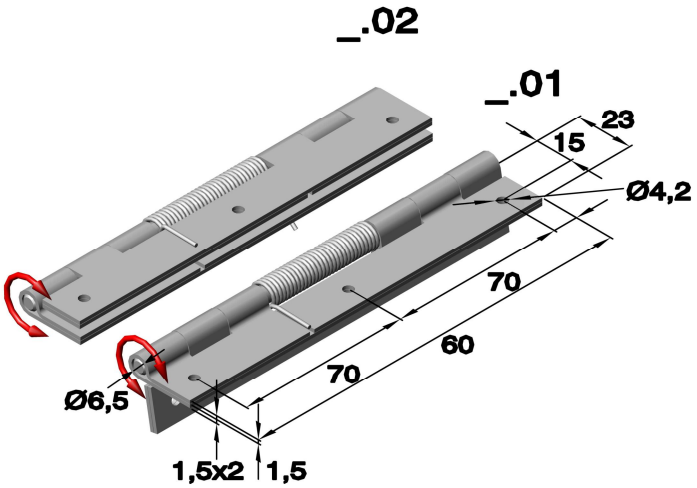

Art. no.: 6067

Tension spring made of stainless steel.

Article no.				Elastic force in g		
Series	Execution	Material		0°	90°	180°
		Raw	Stainless steel			
		Steel	1.4301			
6067	.01	.00	.30	140	220	300
6067	.02	.00	.30	140	220	300

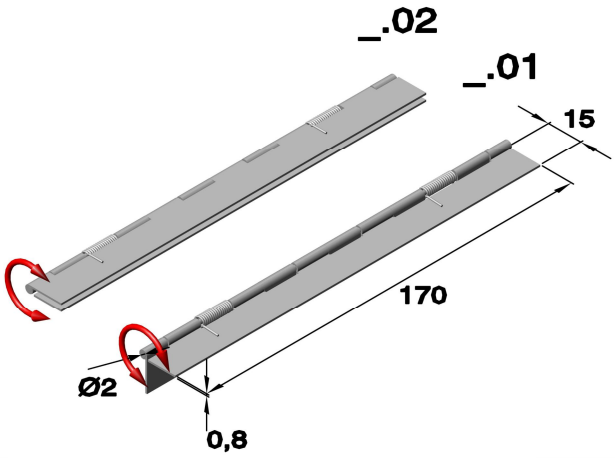

Art. no.: 6068 (drilled)

Tension spring made of stainless steel.

Article no.					in mm	Elastic force in g		
Series	Execution	Material		Spring	Spring wire Ø	0°	90°	180°
		Zinc plated	Stainless steel					
		Steel	1.4301					
6068	.01	.08	.30		1,5	320	640	1060
6068	.02	.08	.30		1,5	320	640	1060
6068	.01	.08	.30	.F08	0,8	20	50	80
6068	.02	.08	.30	.F08	0,8	20	50	80
6068	.01	.08	.30	.F10	1,0	40	120	200
6068	.02	.08	.30	.F10	1.0	40	120	200
6068	.01	.08	.30	.F1.25	1,25	140	300	500
6068	.02	.08	.30	.F1.25	1,25	140	300	500

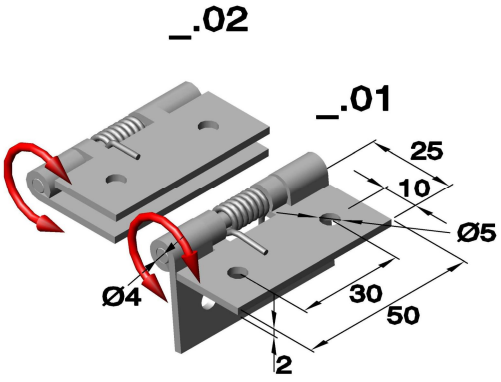

TÜVRheinland ZERTIFIZIERT
Management System
ISO 9001:2015
ISO 14001:2015
www.tuv.com ID 9108624624

Further materials and surface finishes on demand. We will be pleased to give you advice.
Phone: +49 (0) 231 / 725 790 -0 eMail: info@hokon-verschlusstechnik.de
Fax: +49 (0) 231 / 725 790 -10 Homepage: www.hokon-verschlusstechnik.de

Spring hinges

Art. no.: 6107 (drilled)

Tension spring made of stainless steel.

Article no.					in mm	Elastic force in g		
Series	Execution	Material		Spring	Spring wire Ø	0°	90°	180°
		Zinc plated	Stainless steel					
		Steel	1.4301					
6107	.01	.04	.30	.F18	1,8	400	900	1400
6107	.02	.04	.30	.F18	1,8	400	900	1400

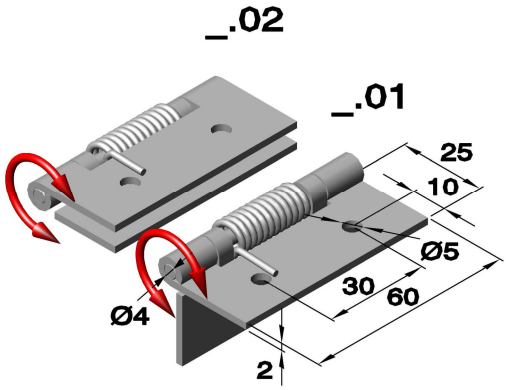

Art. no.: 6108 (drilled)

Tension spring made of stainless steel.

Article no.				in mm	Elastic force in g		
Series	Execution	Material	Spring	Spring wire Ø	0°	90°	180°
		Stainless steel					
		1.4301					
6108	.01	.30	.F05	0,5	10	20	30
6108	.02	.30	.F05	0,5	10	20	30
6108	.01	.30	.F06	0,6	20	40	60
6108	.02	.30	.F06	0,6	20	40	60
6108	.01	.30	.F08	0,8	30	60	90
6108	.02	.30	.F08	0,8	30	60	90

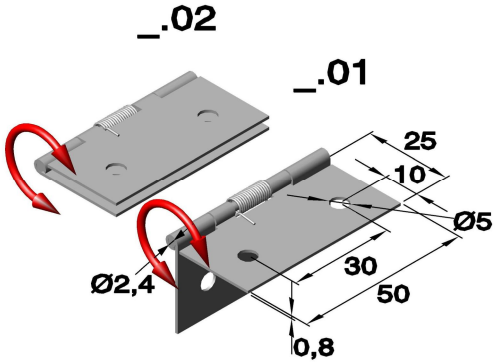

Art. no.: 99.A100 (drilled)

Tension spring made of stainless steel.

Article no.					in mm	Elastic force in g		
Series	Execution	Material		Spring	Spring wire Ø	0°	90°	180°
		Zinc plated	Stainless steel					
		Steel	1.4301					
99.A100	.01	.04	.30		0,4	7	15	25
99.A100	.02	.04	.30		0,4	7	15	25
99.A100	.01	.04	.30	.F08	0,8	30	60	90
99.A100	.02	.04	.30	.F08	0,8	30	60	90

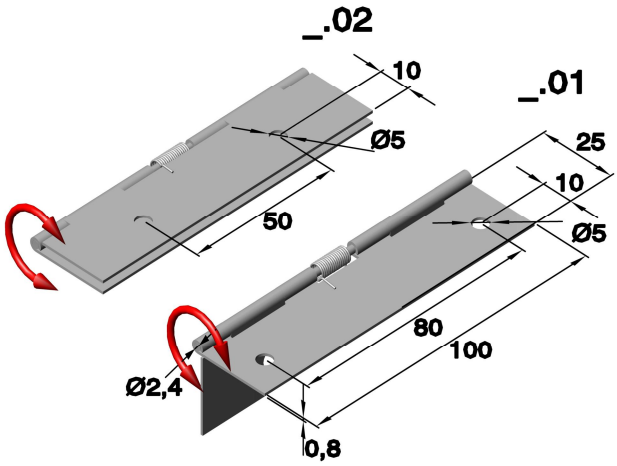

Spring hinges

Art. no.: 6164

Tension spring made of stainless steel.

Article no.				Elastic force in g		
Series	Execution	Material		0°	90°	180°
		Raw	Stainless steel			
		Steel	1.4301			
6164	.01	.00	.30	60	300	600
6164	.02	.00	.30	60	300	600

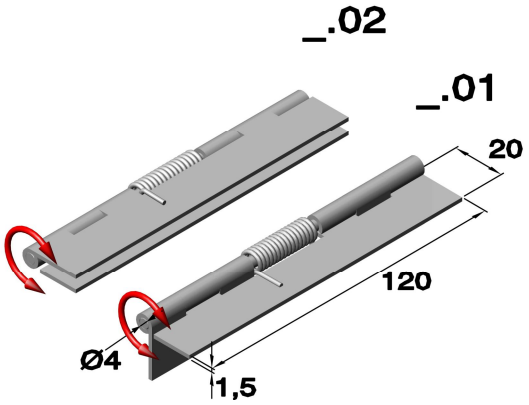

Art. no.: 6164.__ /G (drilled and countersunk)

Tension spring made of stainless steel.

Article no.				Elastic force in g		
Series	Execution	Material		0°	90°	180°
		Zinc plated	Stainless steel			
		Steel	1.4301			
6164	.01	.04/G	.30/G	60	300	600
6164	.02	.04/G	.30/G	60	300	600

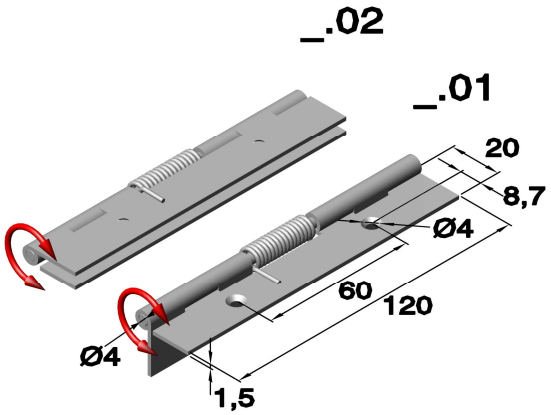

Art. no.: 6165

Tension spring made of stainless steel.

Article no.				Elastic force in g		
Series	Execution	Material		0°	90°	180°
		Raw	Stainless steel			
		Steel	1.4301			
6165	.01	.00	.30	120	600	1200
6165	.02	.00	.30	120	600	1200

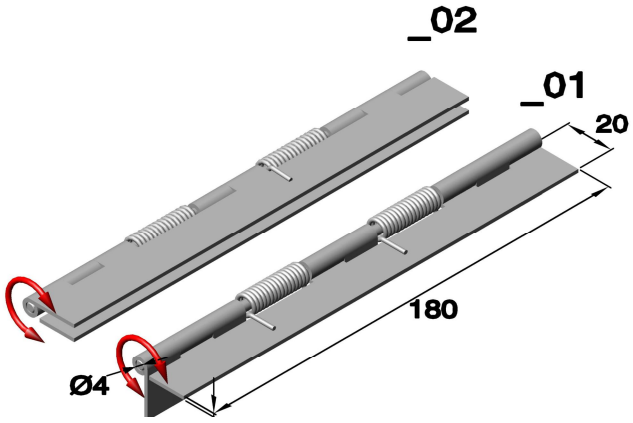

Art. no.: 6165.__ /G (drilled and countersunk)

Tension spring made of stainless steel.

Article no.				Elastic force in g		
Series	Execution	Material		0°	90°	180°
		Zinc plated	Stainless steel			
		Steel	1.4301			
6165	.01	.04/G	.30/G	120	600	1200
6165	.02	.04/G	.30/G	120	600	1200

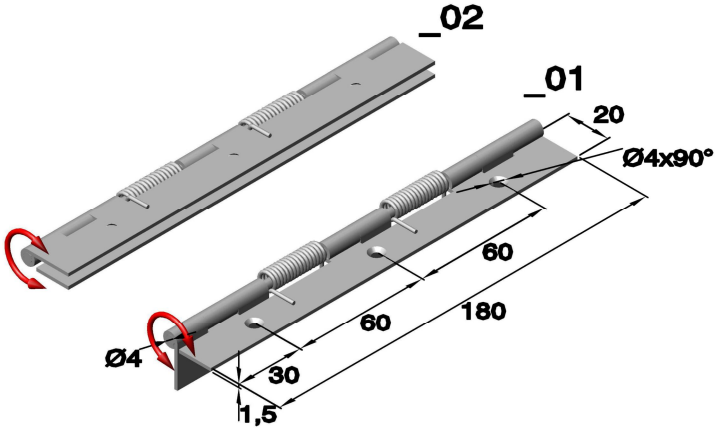

TÜVRheinland ZERTIFIZIERT
Management System ISO 9001:2015 ISO 14001:2015
www.tuv.com ID 9108624624

Further materials and surface finishes on demand. We will be pleased to give you advice.
Phone: +49 (0) 231 / 725 790 -0 eMail: info@hokon-verschlusstechnik.de
Fax: +49 (0) 231 / 725 790 -10 Homepage: www.hokon-verschlusstechnik.de

Spring hinges

Art. no.: 6166

Tension spring made of stainless steel.

Article no.				Elastic force in g		
Series	Execution	Material		0°	90°	180°
		Raw	Stainless steel			
		Steel	1.4301			
6166	.01	.00	.30	180	900	1800
6166	.02	.00	.30	180	900	1800

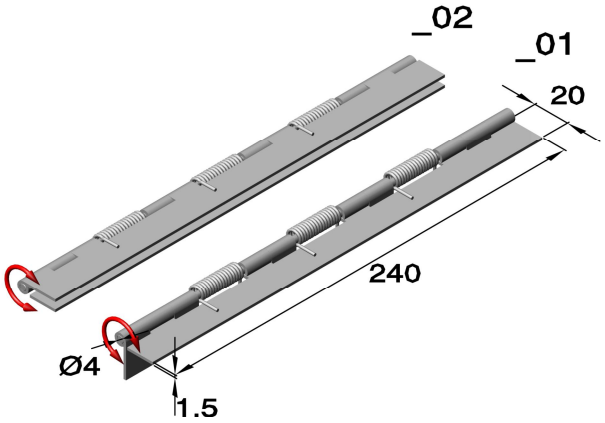

Art. no.: 6166.__. /G (drilled and countersunk)

Tension spring made of stainless steel.

Article no.				Elastic force in g		
Series	Execution	Material		0°	90°	180°
		Zinc plated	Stainless steel			
		Steel	1.4301			
6166	.01	.04/G	.30/G	180	900	1800
6166	.02	.04/G	.30/G	180	900	1800

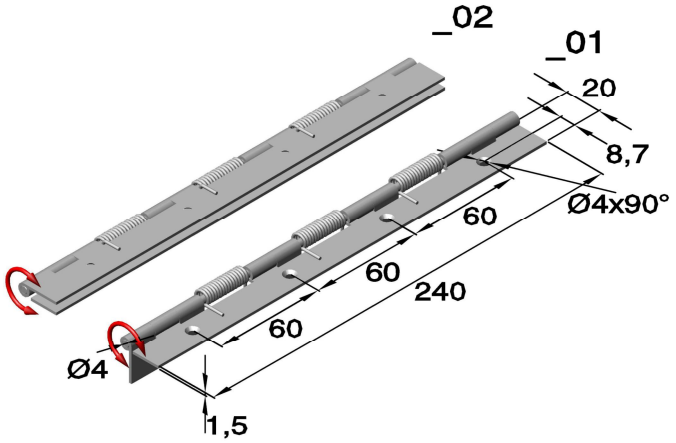

Art. no.: 6169 (drilled)

Tension spring made of stainless steel.

Article no.			Elastic force in g		
Series	Execution	Material	0°	90°	180°
		Stainless steel			
		1.4016			
6169	.01	.30	50	100	150

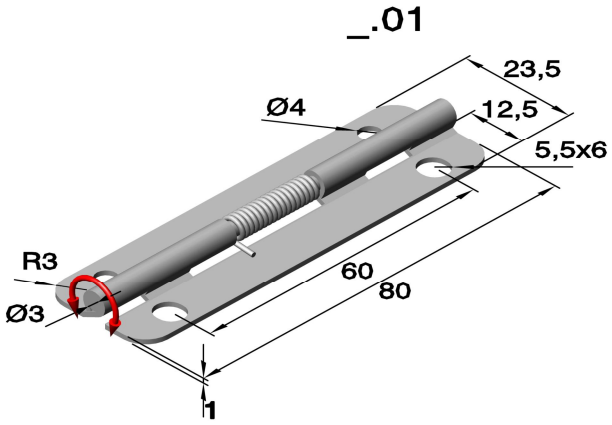

Art. no.: 64080 (drilled and countersunk)

Tension spring made of stainless steel.

Article no.				Dimensions in mm	Elastic force in g		
Series	Execution	Material	Spring	Spring wire Ø	0°	90°	180°
		Stainless steel					
		1.4301					
64080	.01	.30	.F15	1.5	150	520	920
64080	.02	.30	.F15	1.5	150	520	920

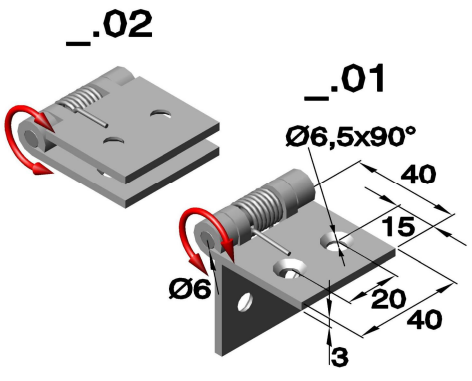

Spring hinges

Art. no.: 6941 (drilled)

Tension spring made of stainless steel.

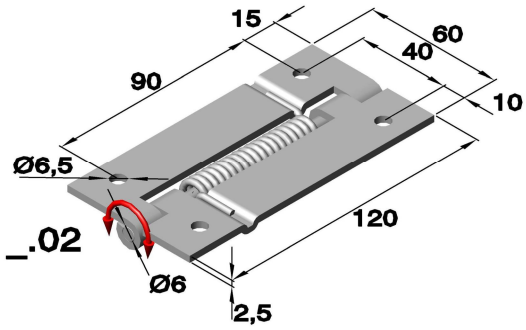

Article no.				Dimensions in mm	Elastic force in g		
Series	Execution	Material Stainless steel 1.4301	Spring	Spring wire Ø	0°	90°	180°
6941	.01	.30	.F28	2,8	300	1600	2600
6941	.02	.30	.F28	2,8	300	1600	2600

Art. no.: 6167 (drilled)

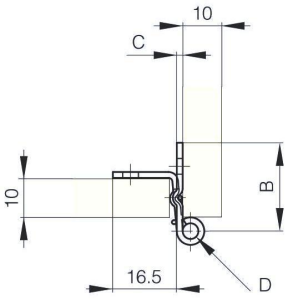

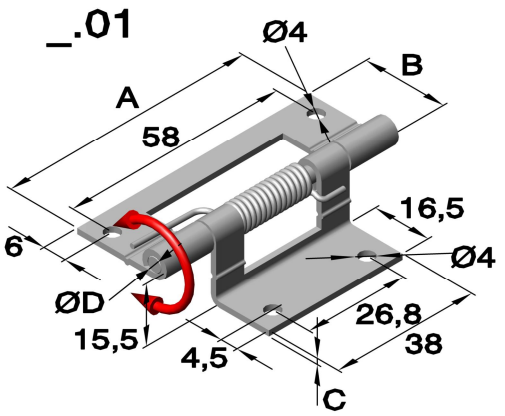

Article no.			in mm			Elastic force in g		
Series	Execution	Material Stainless steel polished 1.4401	A	B	C	0°	90°	180°
6167	.01	.35	66	22,5	1,5	60	200	380

Art. no.: 6486 (drilled)

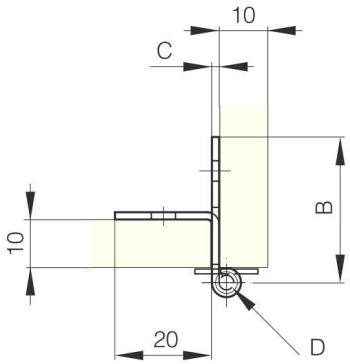

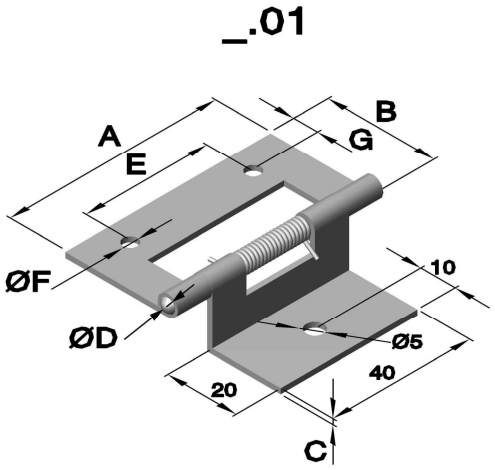

Article no.			Dimensions in mm						
Series	Execution	Material Stainless steel 1.4401	A	B	C	Ø D	E	Ø F	G
6486	.01	.35	60	30	1,5	3	36	4,2	7

TÜVRheinland ZERTIFIZIERT Management System ISO 9001:2015 ISO 14001:2015 www.tuv.com ID 9108624624

Further materials and surface finishes on demand. We will be pleased to give you advice.
Phone: +49 (0) 231 / 725 790 -0 eMail: info@hokon-verschlusstechnik.de
Fax: +49 (0) 231 / 725 790 -10 Homepage: www.hokon-verschlusstechnik.de

Spring hinges

Art. no.: 6872 (drilled and countersunk)
Art. no.: 6873 (drilled and countersunk)

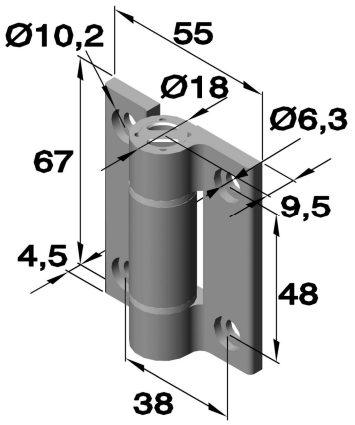

with integrated spring
Also available as:
Free running hinge see chapter “hinges”
Torque hinge see chapter “torque and detent hinges”
Detent hinges see chapter “torque and detent hinges”

Article no.				Elastic force in N m		
Series	Execution	Material		0°	90°	180°
		Aluminium 6060 T5				
		Silver	Black			
6872	.01 self opening	.70	.77	0,23	0,45	0.7
6872	.03 self closing	.70	.77	0,23	0,45	0.7
6872	.02 self opening	.70	.77	0,12	0,24	0,35
6872	.04 self closing	.70	.77	0,12	0,24	0,35
6873	.01 self opening	.70	.77	0,9	1,1	1,3
6873	.02 self closing	.70	.77	0,9	1,1	1,3

Art. no.: 6876 (drilled and countersunk)

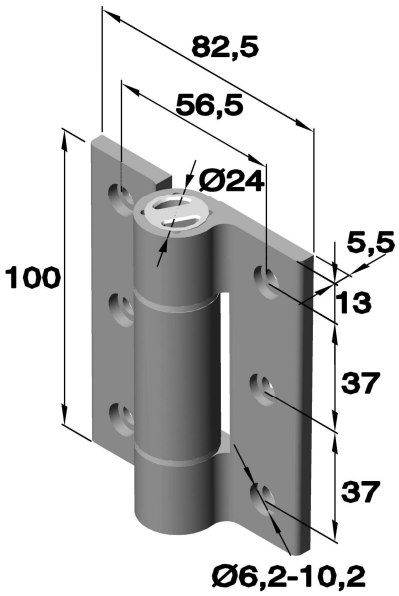

with integrated spring
Also available as:
Free running hinge see chapter “hinges”
Soft-closing hinge see also chapter “torque and detent hinges”

Article no.				Elastic force in N m		
Series	Execution	Material		0°	90°	180°
		Aluminium 6060 T5				
		Silver	Black			
6876	.01	.70.	.77	2,4	3,1	3,8
6876	.02	.70	.77	2,4	3,1	3,8

Art. no.: 6088 (drilled and countersunk)

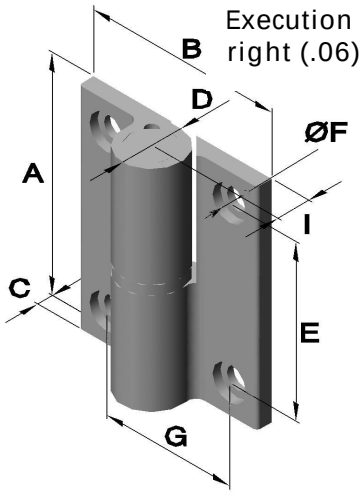

with spring and intermediate ring made of nylon

The hinge moves itself automatically
back to the initial position with an
opening angle of up to 80°.
Above 80° the spring function is cancelled.
The left execution (.05) is a mirror image
to the right execution (.06).

Article no.				Dimensions in mm							
Series	Execution		Material	A	B	C	D	E	Ø F	G	I
	Left	Right	Aluminium 6060 T5								
6088	.05	.06	.77 (silver)	65	55	4,5	18	48	6,5-10,4	38	9,5
6088	.07	.08	.77 (black)	65	55	4,5	18	48	6,5-10,4	38	9,5

Spring hinges

Art.no.:6960 (drilled and countersunk)

with integrated spring

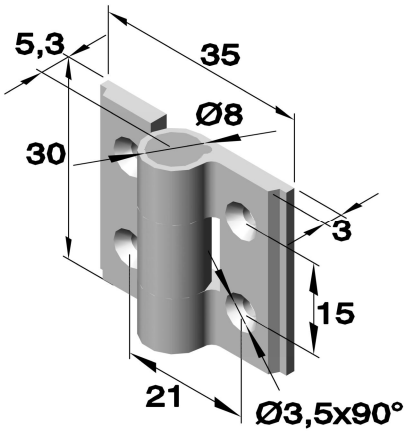

Also available as:
Torque hinge see chapter “torque and detent hinges”
Detent hinge see chapter “torque and detent hinges”

Article no.				Elastic force in N m		
Series	Execution	Material				
		Colourless	Black	0°	90°	180°
		Alu 6060 T5	Alu 6060 T5			
6960	.01	.71	.77	0,2	0,12	0,07
6960	.02	.71	.77	0,2	0,12	0,07

Art.no. 158. 5314.__.__ (spring force adjustable)

with integrated spring

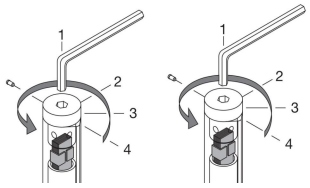

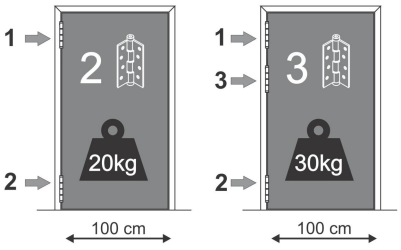

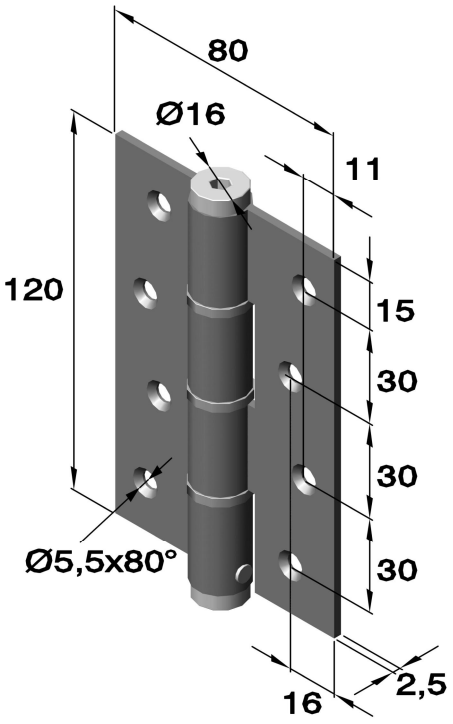

Article no.			Loading capacity	
Series	Material		for 2 hinges	for 3 hinges
	Zinc plated	Brushed		
	Steel	Stainless steel		
158.5314.08	.04	-	20	30
158.5314.05	-	.30	20	30

This product will be delivered only in pairs.
Close doors automatically, integrated mechanic is very tough and adjustable.
max. aperture angle 180°.

TÜVRheinland ZERTIFIZIERT Management System ISO 9001:2015 ISO 14001:2015 www.tuv.com ID 9108624624

Further materials and surface finishes on demand. We will be pleased to give you advice.
Phone: +49 (0) 231 / 725 790 -0 eMail: info@hokon-verschlusstechnik.de
Fax: +49 (0) 231 / 725 790 -10 Homepage: www.hokon-verschlusstechnik.de

Spring hinges

Art.no. 158. 5814.__.__ (spring force adjustable)

with integrated spring

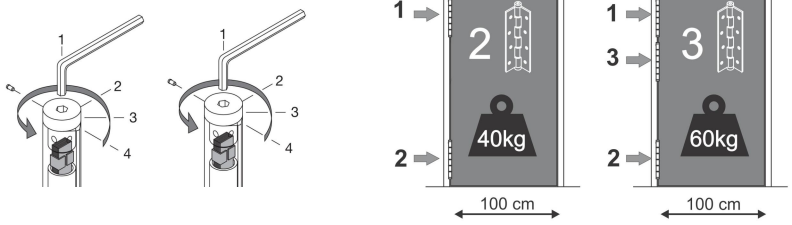

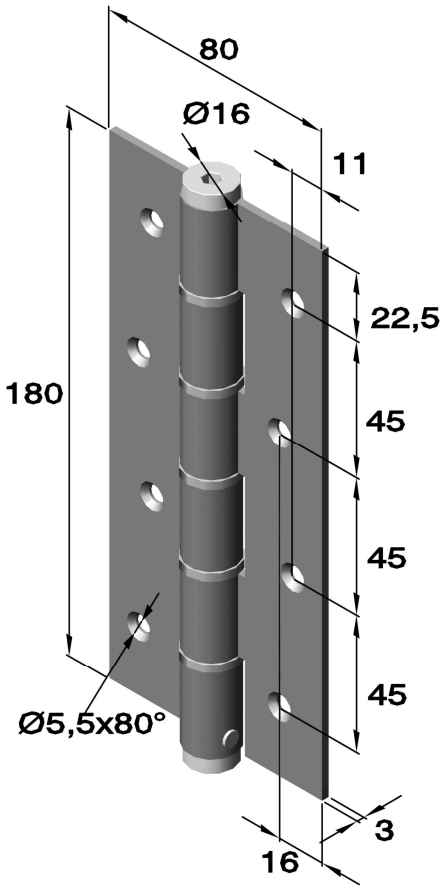

Article no.			Loading capacity	
Series	Material		for 2 hinges	for 3 hinges
	Zinc plated	Brushed		
	Steel	Stainless steel		
158.5814.08	.04	-	40	60
158.5814.05	-	.30	40	60

This product will be delivered only in pairs.
Close doors automatically,
integrated mechanic is very tough and adjustable.
max. aperture angle 180°.

Art.no. 158. 5414.__.__ (spring force adjustable)

Double joint hinge/Swing door hinge, with integrated spring

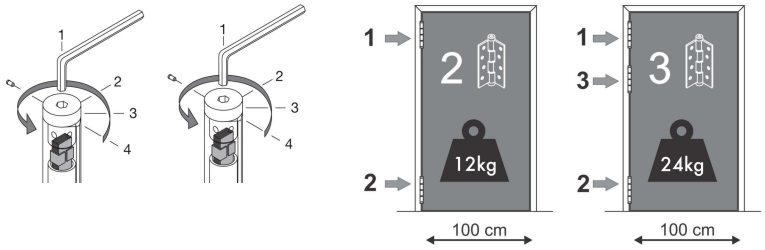

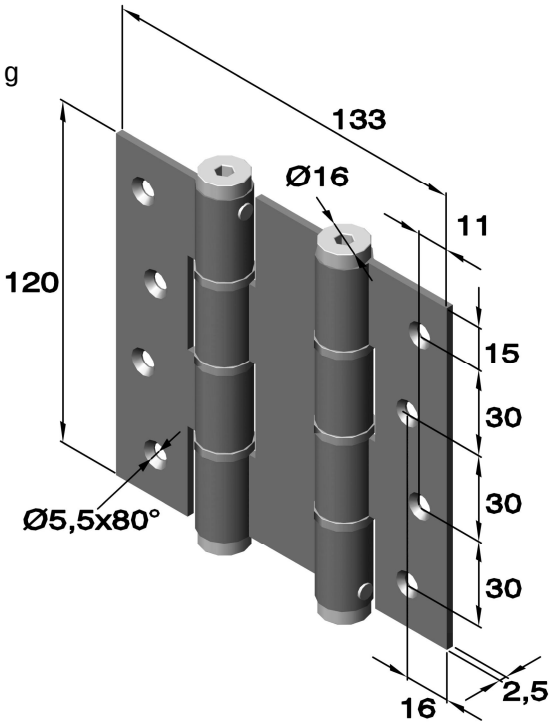

Article no.			Loading capacity	
Series	Material		for 2 hinges	for 3 hinges
	Zinc plated	Brushed		
	Steel	Stainless steel		
158.5414.08	.04	-	12	24
158.5414.05	-	.30	12	24

This product will be delivered only in pairs.
Close doors automatically,
integrated mechanic is very tough and adjustable.
Max. aperture angle 180°.

Spring hinges

Art.no. 158. 5914.__.__ (spring force adjustable)

double joint hinge/Swing door hinge,
with integrated spring

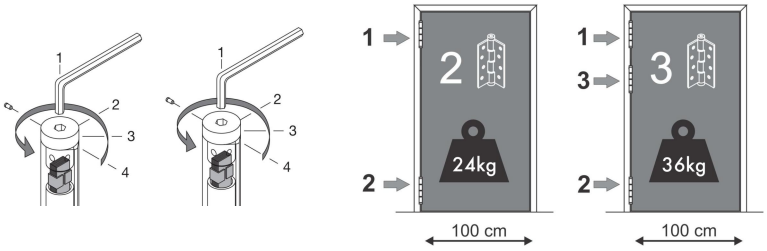

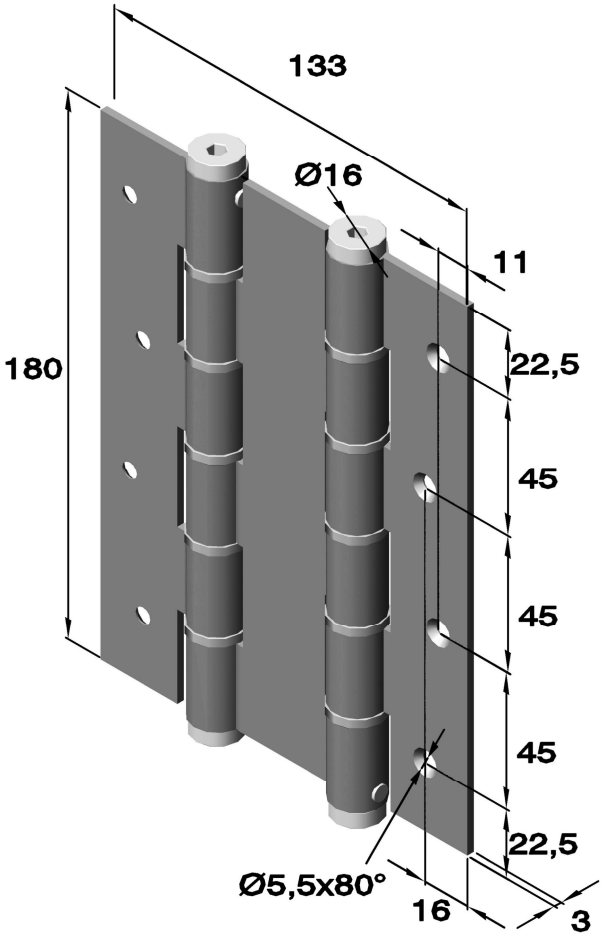

Article no.			Loading capacity	
Series	Material		for 2 hinges	for 3 hinges
	Zinc plated	Brushed		
	Steel	Stainless steel		
158.5914.08	.04	-	24	36
158.5914.05	-	.30	24	36

This product will be delivered only in pairs.
Close doors automatically,
integrated mechanic is very tough and adjustable.
Max. aperture angle 180°.

Art.no. 158. 5314.__.__ (spring force adjustable)

with integrated spring

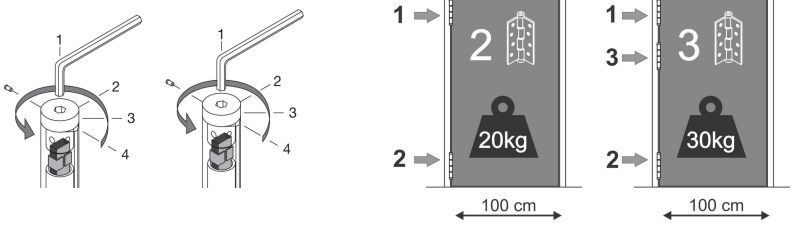

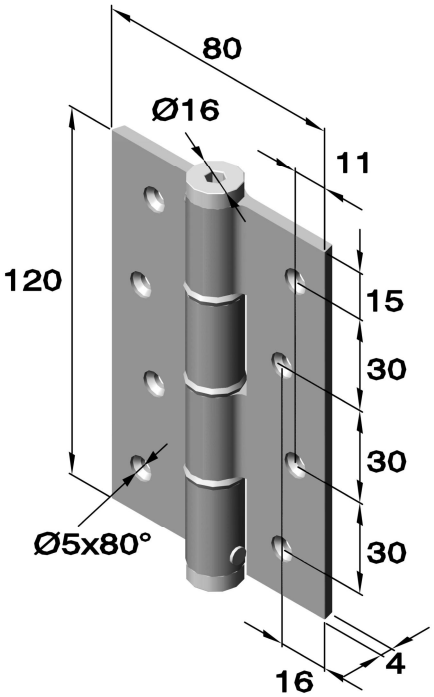

Article no.			Loading capacity in kg	
Series	Material		for 2 hinges	for 3 hinges
	Aluminium	Anodized		
158.5314.01	.71	Silver	20	30
158.5314.02	.72	Gold	20	30
158.5314.03	.73	Bronze	20	30
158.5314.06	.76	White	20	30
158.5314.09	.77	Black	20	30

This product will be delivered only in pairs.
Close doors automatically, integrated mechanic is very tough and adjustable.
Max. aperture angle 180°.

TÜVRheinland ZERTIFIZIERT
Management System ISO 9001:2015 ISO 14001:2015
www.tuv.com ID 9108624624

Further materials and surface finishes on demand. We will be pleased to give you advice.
Phone: +49 (0) 231 / 725 790 -0 eMail: info@hokon-verschlusstechnik.de
Fax: +49 (0) 231 / 725 790 -10 Homepage: www.hokon-verschlusstechnik.de

Spring hinges

Art.no. 158. 5814.__.__ (spring force adjustable)

with integrated spring

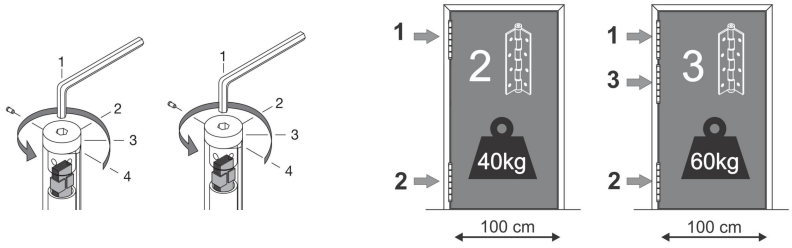

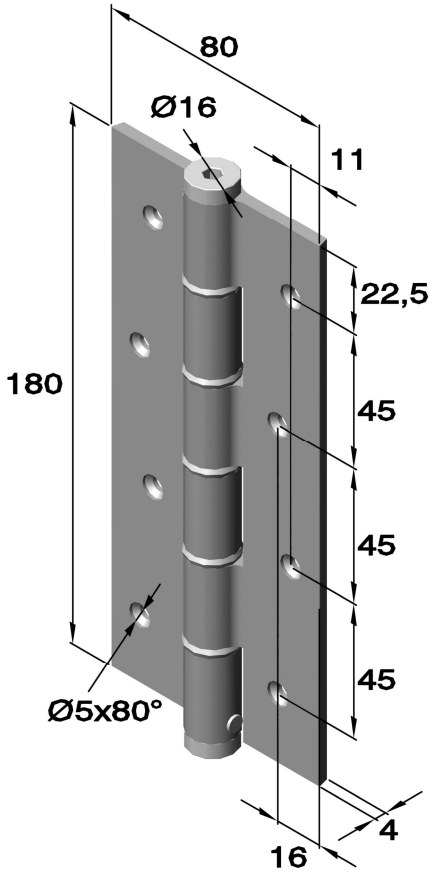

Article no.			Loading capacity in kg	
Series	Material		for 2 hinges	for 3 hinges
	Aluminium	Anodized		
158.5814.01	.71	Silver	40	60
158.5814.02	.72	Gold	40	60
158.5814.03	.73	Bronze	40	60
158.5814.06	.76	White	40	60
158.5814.09	.77	Black	40	60

This product will be delivered only in pairs.
Close doors automatically,
integrated mechanic is very tough and adjustable.
Max. aperture angle 180°.

Art.no. 158. 5414.__.__ (spring force adjustable)

Double joint hinge/Swing door hinge,
with integrated spring

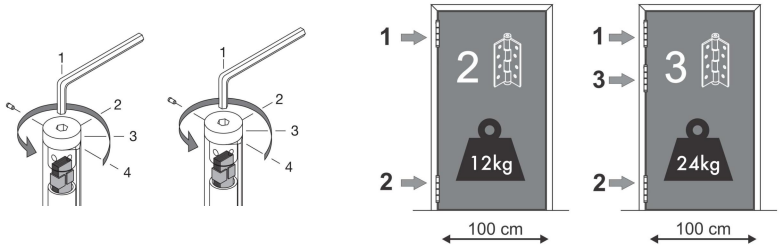

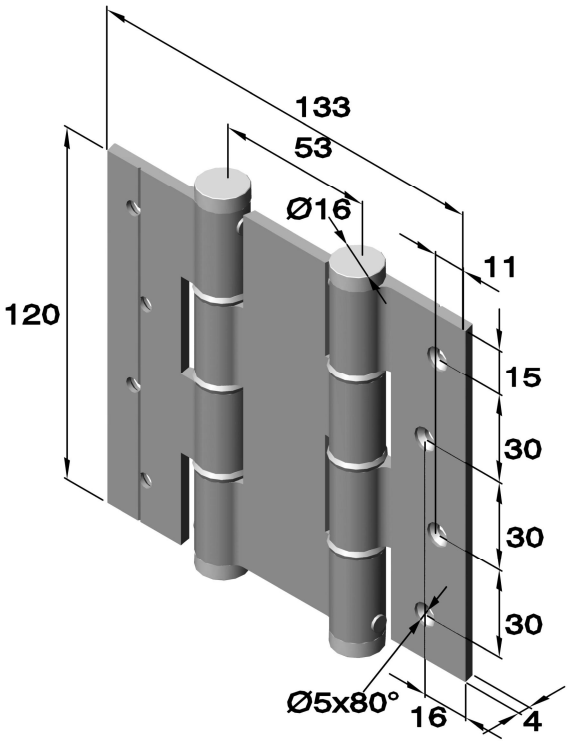

Article no.			Loading capacity in kg	
Series	Material		for 2 hinges	for 3 hinges
	Aluminium	Anodized		
158.5414.01	.71	Silver	12	24
158.5414.02	.72	Gold	12	24
158.5414.03	.73	Bronze	12	24
158.5414.06	.76	White	12	24
158.5414.09	.77	Black	12	24

This product will be delivered only in pairs.
Close doors automatically,
integrated mechanic is very tough and adjustable.
Max. aperture angle 180°.

Spring hinges

Art.no. 158. 5914.__.__ (spring force adjustable)

Double joint hinge/Swing door hinge,
with integrated spring

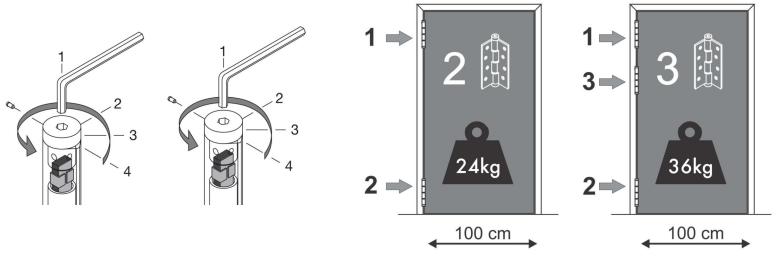

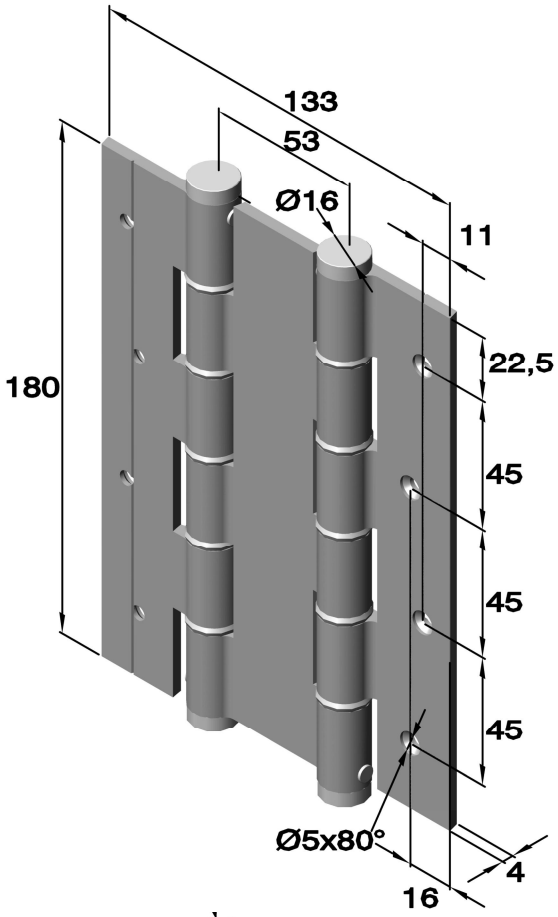

Article no.			Loading capacity in kg	
Series	Material		for 2 hinges	for 3 hinges
	Aluminium	Anodized		
158.5914.01	.71	Silver	24	36
158.5914.02	.72	Gold	24	36
158.5914.03	.73	Bronze	24	36
158.5914.06	.76	White	24	36
158.5914.09	.77	Black	24	36

This product will be delivered only in pairs.
Close doors automatically,
integrated mechanic is very tough and adjustable.
Max. aperture angle 180°.

Art.no. 158. 6314.__.__ (spring force adjustable)

with integrated spring

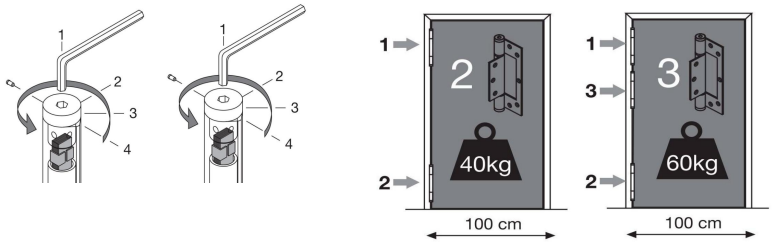

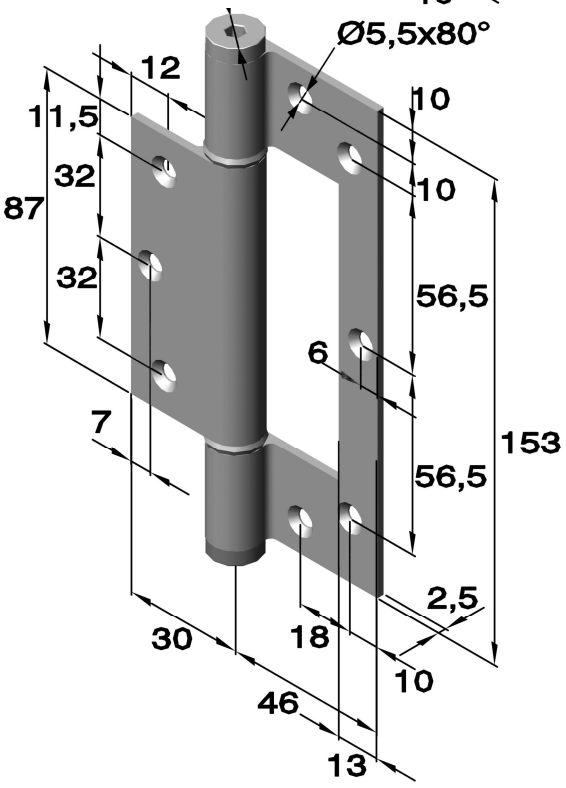

Article no.			Loading capacity in kg	
Series	Material		for 2 hinges	for 3 hinges
	Aluminium	Anodized		
158.6314.01	.71	Silver	40	60
158.6314.02	.72	Gold	40	60
158.6314.03	.73	Bronze	40	60
158.6314.06	.76	White	40	60
158.6314.09	.77	Black	40	60

This product will be delivered only in pairs.
Close doors automatically,
integrated mechanic is very tough and adjustable.
Max. aperture angle 180°.

TÜVRheinland ZERTIFIZIERT
Management System ISO 9001:2015 ISO 14001:2015
www.tuv.com ID 9108624624

Further materials and surface finishes on demand. We will be pleased to give you advice.
Phone: +49 (0) 231 / 725 790 -0 eMail: info@hokon-verschlusstechnik.de
Fax: +49 (0) 231 / 725 790 -10 Homepage: www.hokon-verschlusstechnik.de

Spring hinges

Art.no. 158.I-5___.__ (spring force adjustable)

with integrated spring

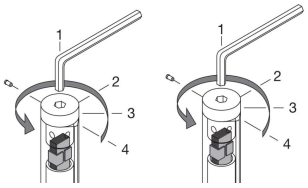

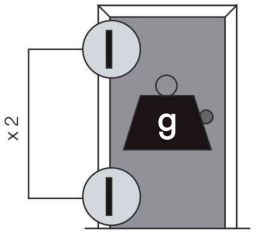

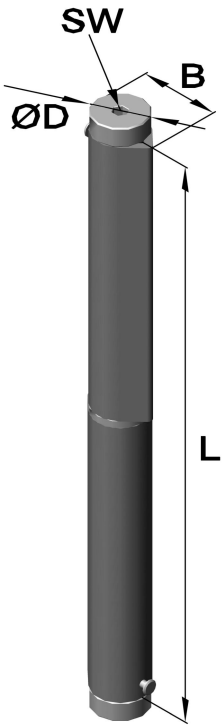

Article no.		Dimensions in mm				Loading capacity in kg
Series	Material Raw Steel	L	B	SW	ØD	g
158.I-5524	.00	120	21	5	18	20
158.I-5324	.00	180	21	5	18	40
158.I-5124	.00	235	26	5	22	60

This product will be delivered only in pairs.
Close doors automatically, integrated mechanic is very tough and adjustable.
Max. aperture angle 180°.

Art.no. 158.I-5___.__(spring force adjustable)

with integrated spring, with ball bearing

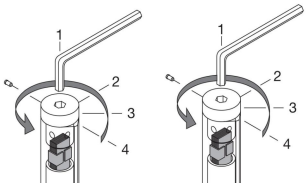

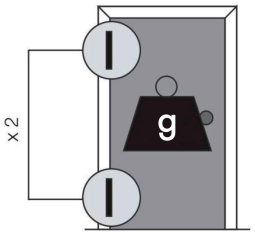

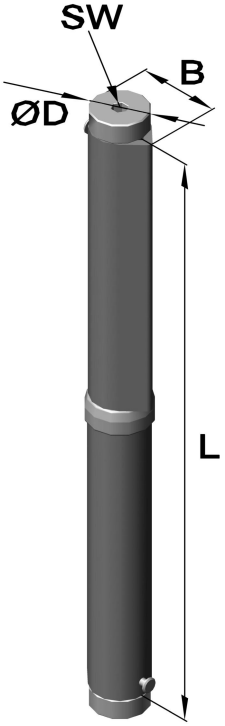

Article no.		Dimensions in mm				Loading capacity in kg
Series	Material Raw Steel	L	B	SW	ØD	g
158.I-5334	.00	180	21	5	18	60
158.I-5134	.00	235	26	5	22	120

This product will be delivered only in pairs.
Close doors automatically, integrated mechanic is very tough and adjustable.
Max. aperture angle 180°.

Spring hinges

Hinges for fire doors

Art.no. 158.I-5224.__ (spring force adjustable)

with integrated spring

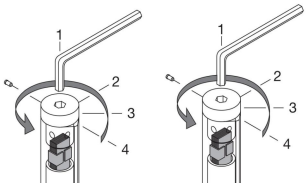

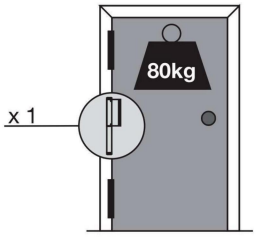

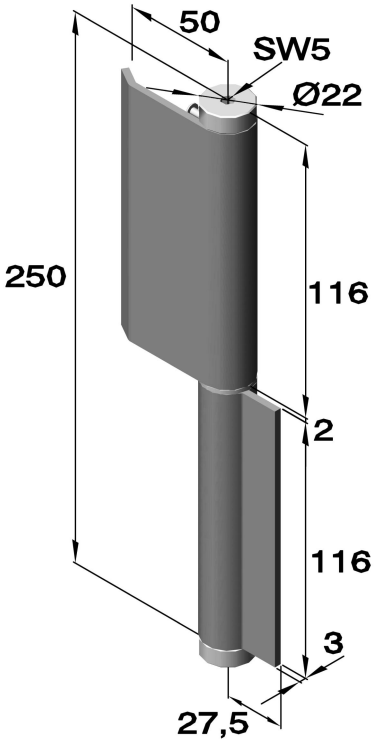

Article no.	
Series	Material
	Raw
	Steel
158.I-5224	.00

This producht will be delivered only in pairs.
Close doors automaticly, integrated mechanic is very tough and adjustable.
Max. aperture angle 180°.

Art.no. 158. 6717.__.__ (spring force adjustable)

with integrated spring

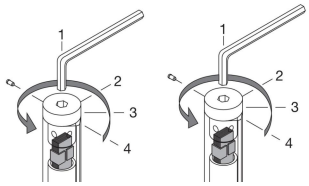

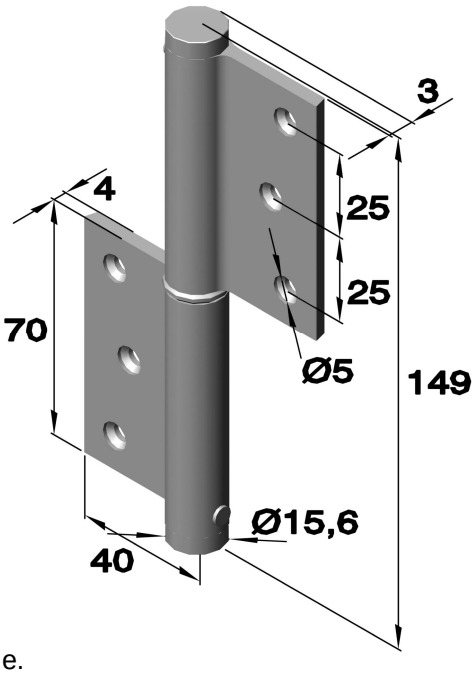

Article no.		
Series	Material	
	Aluminium	Anodized
158.6717.01	.71	Silver
158.6717.02	.72	Gold
158.6717.03	.73	Bronze
158.6717.06	.76	White
158.6717.09	.77	Black

This producht will be delivered only in pairs.
Close doors automaticly, integrated mechanic is very tough and adjustable.
Max. aperture angle 180°.

TÜVRheinland ZERTIFIZIERT Management System ISO 9001:2015 ISO 14001:2015 www.tuv.com ID 9108624624

Further materials and surface finishes on demand. We will be pleased to give you advice.
Phone: +49 (0) 231 / 725 790 -0 eMail: info@hokon-verschlusstechnik.de
Fax: +49 (0) 231 / 725 790 -10 Homepage: www.hokon-verschlusstechnik.de

Plastic hinges

hinges made of polyamide

Art. no.: 6550 (drilled and countersunk)

with stainless steel pin,

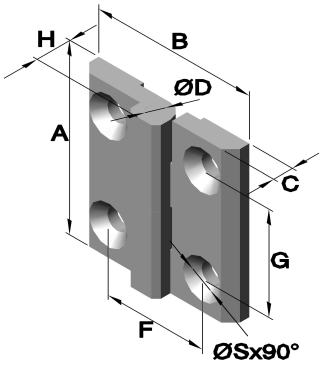

Article no.		Material	Dimensions in mm							
Series	Execution		A	B	C	Ø D	F	G	H	Ø Pin
6550	.01	Polyamide	40	40	5	4	25	25	9	5,3
6550	.02	Polyamide	50	50	6	6	30	30	11,5	6,4

Art. no.: 6551

with stainless steel pin and threaded bolts

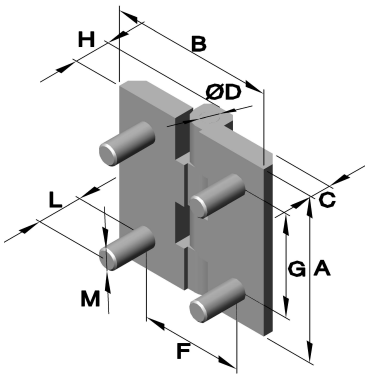

Article no.		Material	Dimensions in mm								
Series	Execution		A	B	C	Ø D	F	G	H	L	M
6551	.01	Polyamide	40	40	5	4	25	25	9	11	M5
6551	.02	Polyamide	50	50	6	6	30	30	11,5	15	M6

Art. no.: 6552 (drilled and countersunk)

with stainless steel pin and threaded bolt

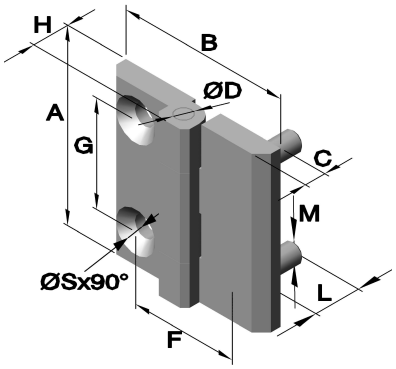

Article no.		Material	Dimensions in mm									
Series	Execution		A	B	C	Ø D	F	G	H	L	M	Ø Pin
6552	.01	Polyamide	40	40	5	4	25	25	9	11	M5	5,3
6552	.02	Polyamide	50	50	6	6	30	30	11,5	15	M6	6,4

Art. no.:6530 (drilled and countersunk)

with stainless steel pin

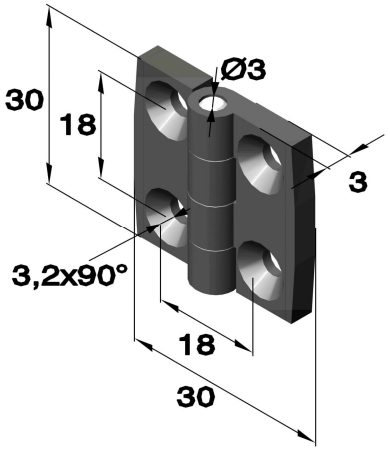

Article no.		
Series	Execution	Material
		Black
		Polyamide
6530	.01	.80

Plastic hinges

hinges made of polyamide

Art. no.:6530 (drilled and countersunk)
with stainless steel pin

Article no.		
Series	Execution	Material
		Black
		Polyamide
6530	.02	.80

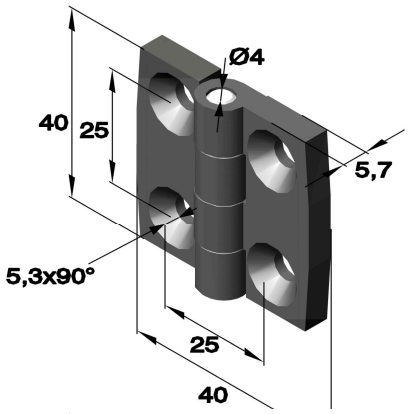

Art. no.:6530 (drilled and countersunk)
with stainless steel pin

Article no.		
Series	Execution	Material
		Black
		Polyamide
6530	.03	.80

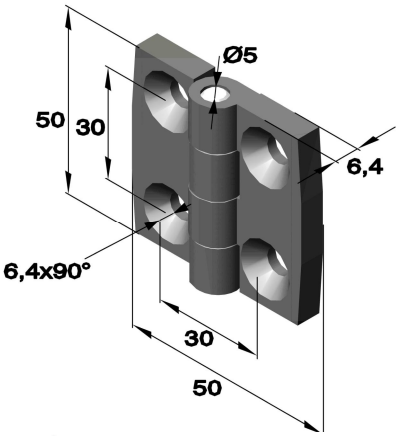

Art. no.:6530 (drilled and countersunk)
with stainless steel pin

Article no.		
Series	Execution	Material
		Black
		Polyamide
6530	.04	.80

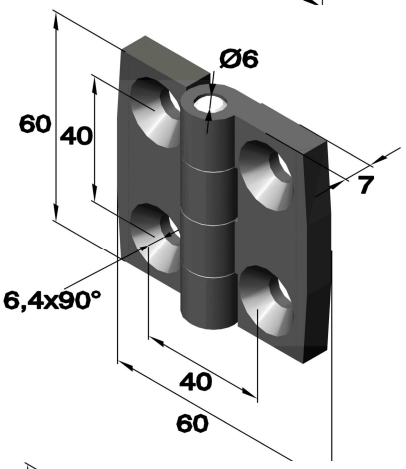

Art. no.:6560
with stainless steel pin and threaded bolt

Article no.		
Series	Execution	Material
		Black
		Polyamide
6560	.01	.80

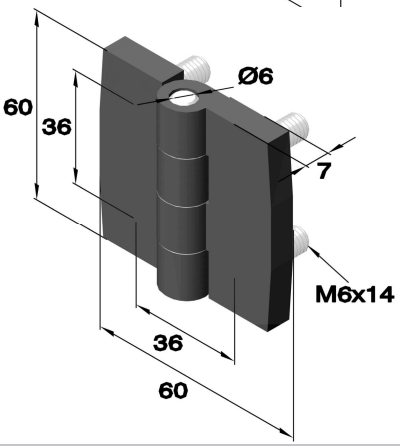

TÜVRheinland® CERT ISO 9001

Further materials and surface finishes on request. We will be pleased to give you advise!
Phone: +49 (0) 231 / 725 790 -0 eMail: info@hokon-verschlusstechnik.de
Fax: +49 (0) 231 / 725 790 -10 Homepage: www.hokon-verschlusstechnik.de

Plastic hinges
hinges made of polyamide

Plastic hinges in rolls of 15,25 m

Technical information:
Temperature: - 40° C up to + 80°C.
Fixation with rivets, pins, nails and bars.
Chemical resistance: oil, seawater, solvents and most chemical substances.

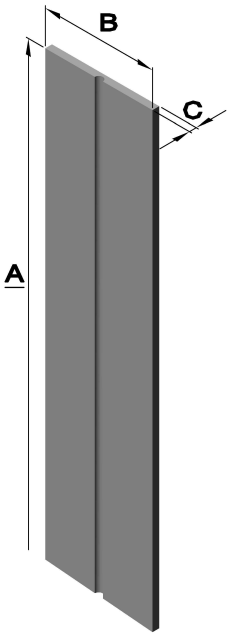

Article no.				Material	Dimensions in mm		
Series	Colour						
	White	Gray	Black		A	B	C
6521	.01	.02	.03	Polypropylene	15250	28,6	3,2
6522	.01	.02	.03	Polypropylene	15250	38,1	3,2
6523	.01	.02	.03	Polypropylene	15250	50,8	3,2
6524	.01	.02	.03	Polypropylene	15250	76,2	3,2

Art.no.:6525 (drilled and countersunk)

Technical information:
Temperature: - 40° C up to + 80°C.
Fixation with rivets, pins, nails and bars
Chemical resistance: oil, seawater, solvents and the most chemical substances.

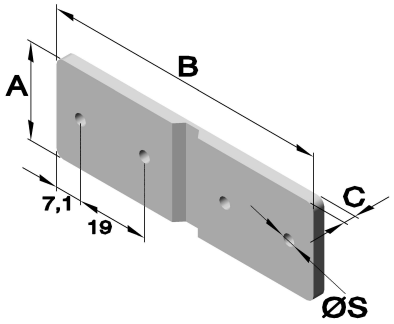

Article no.			Material	Dimensions in mm			
Series	Colour						
	White	Black		A	B	C	Ø S
6525	.01	.03	Polypropylene	25,4	76,2	3,2	3,2

Art.no.:6526 (drilled and countersunk)

Technical information:
Temperature: - 40° C up to + 80°C.
Fixation with rivets, pins, nails and bars.
Chemical resistance: oil, seawater, solvets and the most chemical substances.

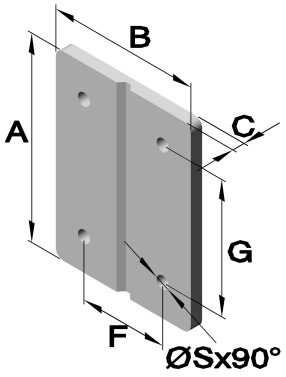

Article no.			Materials	Dimensions in mm					
Series	Colour								
	White	Black		A	B	C	F	G	Ø S
6526	.01	.03	Polypropylene	50,8	38,1	3,17	22,2	33,3	3,43

Plastic hinges

hinges made of polyamide

Art.no.:6527 (drilled and countersunk)

Technical information:
Temperature: - 40° C up to + 80°C.
Fixation with rivets, pins, nails and bars.
Chemical resistance: oil, seawater, solvets and the most chemical substances.

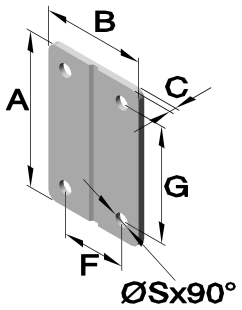

Article no.			Material	Dimensions in mm					
Series	Colour			A	B	C	F	G	Ø S
	White	Black							
6527	.01	.03	Polypropylene	38,1	25,4	2	15,9	28,6	3,43

Art.no.:6528

Technical information:
Temperature: - 40° C up to + 80°C.
Fixation with rivets, pins, nails and bars.
Chemical resistance: oil, seawater, solvets and the most chemical substances.

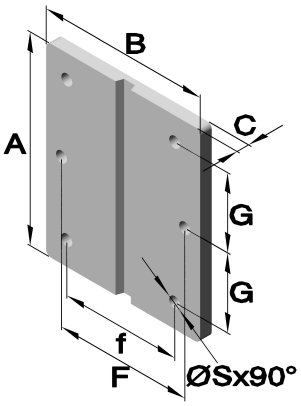

Article no.			Material	Dimensions in mm						
Series	Colour			A	B	C	F	f	G	Ø S
	White	Black								
6528	.01	.03	Polypropylene	76,2	63,5	4,76	50,8	44,4	57,1	4,65

Art.nr.:6529 (drilled and countersunk)

Technical information:
Temperature: - 40° C up to + 80°C.
Fixation with rivets, pins, nails and bars.
Chemical resistance: oil, seawater, solvets and the most chemical substances.

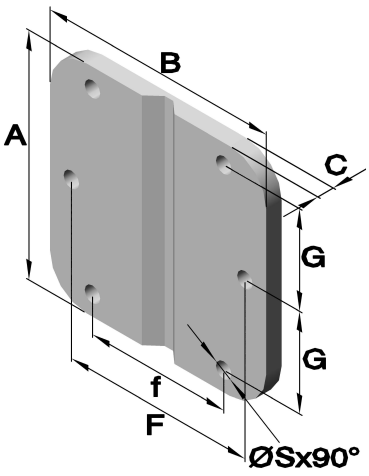

Article no.			Material	Dimensions in mm						
Series	Colour			A	B	C	F	f	G	Ø S
	White	Black								
6529	.01	.03	Polypropylene	88,9	88,9	6,35	71,4	54	36,5	6

TÜVRheinland® CERT ISO 9001

Further materials and surface finishes on request. We will be pleased to give you advise!
Phone: +49 (0) 231 / 725 790 -0 eMail: info@hokon-verschlusstechnik.de
Fax: +49 (0) 231 / 725 790 -10 Homepage: www.hokon-verschlusstechnik.de

Plastic hinges

hinges made of polyamide

Art. no.: 6531 (drilled and countersunk)

Technical information:
Temperature: - 40° C up to + 80°C.
Fixation with rivets, pins, nails and bars.
Chemical resistance: oil, seawater, solvents and most chemical substances.

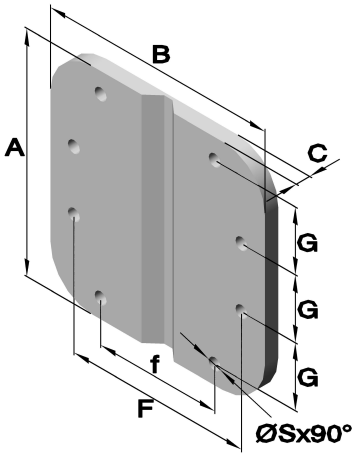

Article no.				Material	Dimensions in mm						
Series	Colour				A	B	C	F	f	G	Ø Pin
	White	Gray	Black								
6531	.01	.02	.03	Polypropylene	101,6	101,6	6,35	79,4	54	27,8	8

Art. no.: 6532

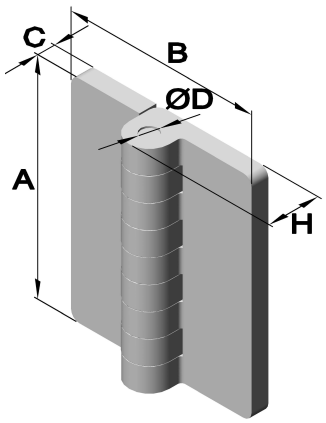

Article no.					Material	Dimensions in mm				
Series	Colour					A	B	C	Ø D	H
	White	Gray	Black	Transparent						
6532	.01	-	.02	-	Polypropylene	63,5	54	5	3,2	14,6
6532	-	-	-	.05	Polycarbonate	63,5	54	5	3,2	14,6

Art. no.: 6534

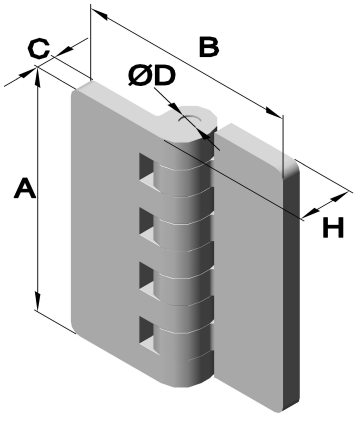

Article no.					Material	Dimensions in mm				
Series	Colour					A	B	C	Ø D	H
	White	Gray	Black	Transparent						
6534	.01	-	.02	-	Polypropylene	63,5	54	5	3,2	14,6
6534	-	-	-	.05	Polycarbonate	63,5	54	5	3,2	14,6

Plastic hinges

hinges made of polyamide

Art. no.: 6535 (drilled and countersunk)

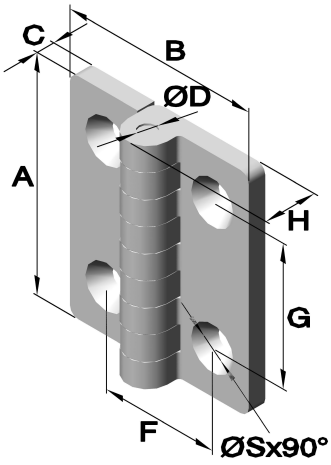

Article no.		Material	Dimensions in mm							
Series	Colour		A	B	C	Ø D	F	G	H	Ø Pin
6535	Nature	Polyethylene	63,5	54	5	3,2	32	38,1	14,6	6,2

Art. no.: 6124 (drilled and countersunk)

with stainless steel pin without intermediate ring,

Left completion (.01) is inverse to right completion (.02).
Maximum load: 40kg

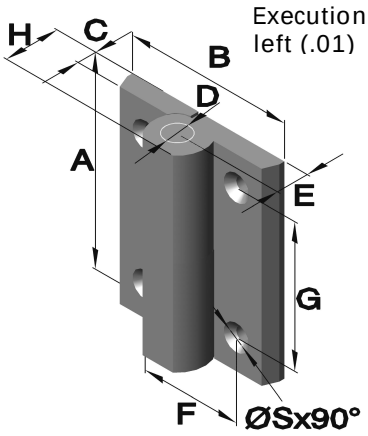

Article no.			Material	Dimensions in mm								
Series	Execution			A	B	C	Ø D	E	F	G	H	Ø Pin
	Left	Right	Polyamide									
6124	.01	.02	.80	74	60	7	9,5	11,5	36	51	5	5

TÜVRheinland® CERT ISO 9001

Further materials and surface finishes on request. We will be pleased to give you advise!
Phone: +49 (0) 231 / 725 790 -0 eMail: info@hokon-verschlusstechnik.de
Fax: +49 (0) 231 / 725 790 -10 Homepage: www.hokon-verschlusstechnik.de

Torque hinges



Art.:6871



Art.:6875



Art.:6871.04



Art.:6871.05



Art.:6876



Art.: 150.SK-T-ZA



Art.: 150.SK-T-ZA



Art.: 150.HG-TA



Art.: 150.HG-IT MC



Art.:150.SF-TH



Art.:150.HG-TS

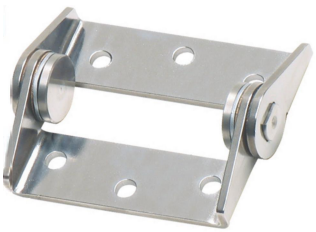

Art.:150.HG-ITS



Art.:150.HG-ITM

Torque hinges

The advantage of torque hinges is that every possible desirable positioning may be kept.
The torque is adjusted through an adjustment screw.

Art. no.: 6871 (drilled and countersunk)

Set screw: hexagon socket 2.5
Temperature resistance: -20 °C up to + 80 °C

Max. tensile strength : 2240 N
Max. shear strength: 1050 N

Also available as:
Spring hinge see chapter „**Spring hinges**“
Detent hinge see chapter **„Torque and detent hinges“**

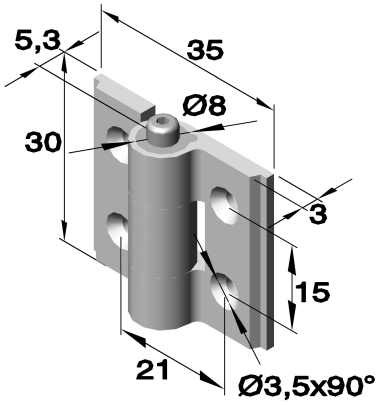

Article no.				
Series	Execution	Material		
		Raw	Colourless	Black
		Alu. 6060 T5	Alu. 6060 T5	Alu. 6060 T5
6871	.01	.70	-	.77
6871	.02	-	.70	-

Art. no.: 6871 (drilled and countersunk)

Holding torque: 0 - 5 Nm max.
Set screw: hexagon socket 4
Temperature resistance: -20 °C up to + 80 °C

Max. tensile strength : 6000 N
Max. shear strength: 5000 N

Also available as:
Free running hinge see chapter “**Hinges**”
Spring hinge see chapter „**Spring hinges**“
Detent hinge see chapter **„Torque and detent hinges“**

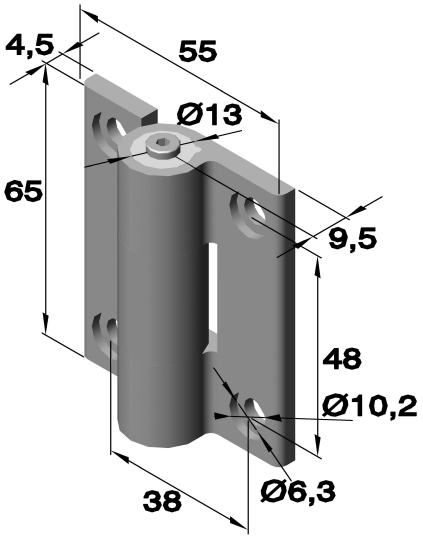

Article no.			
Series	Execution	Material	
		Colourless	Black
		Alu. 6060 T5	Alu. 6060 T5
6871	.04	.70	.77

TÜVRheinland ZERTIFIZIERT Management System ISO 9001:2015 ISO 14001:2015 www.tuv.com ID 9108624624

Further materials and surface finishes on demand. We will be pleased to give you advice.
Phone: +49 (0) 231 / 725 790 -0 eMail: info@hokon-verschlusstechnik.de
Fax: +49 (0) 231 / 725 790 -10 Homepage: www.hokon-verschlusstechnik.de

Torque hinges

Art. no.: 6871 (drilled and countersunk)

Holding torque: 0 - 5 Nm max.
Set screw: Hexagon socket 4
Temperature resistance: -20 °C up to + 80 °C

Max. tensile strength : 6000 N
Max. shear strength: 5000 N

Article no.			
Series	Execution	Material	
		Raw	Black
		Alu. 6060 T5	Alu. 6060 T5
6871	.05	.70	.77

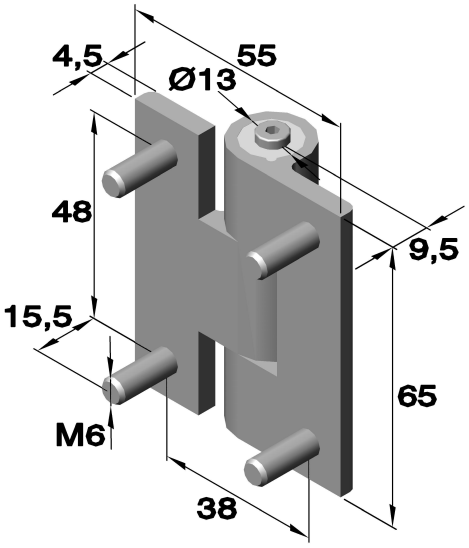

Art. no. 6876 (drilled and countersunk)9

Soft-closing hinge
Opens and closes steamed.
Feature till 115° guaranteed
Torque per Pair: 2,5 to 4,5 N.m

Also available as:
Free running hinge see chapter "**Hinges**"
Spring hinge see chapter "**Spring hinges**"

Article no.		
Series	Execution	Material
		Anodized colourless
		Aluminium 6060 T5
6876	.06	.71

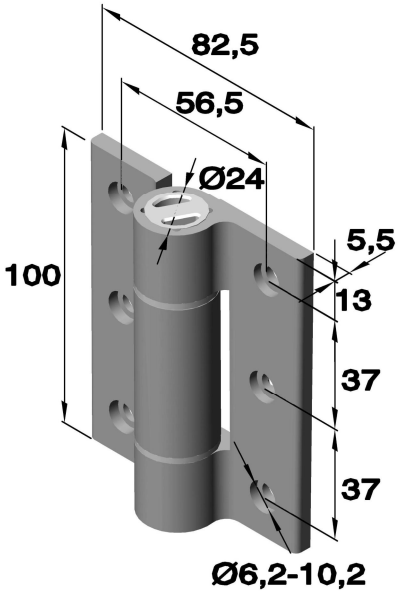

Torque hinges

Art. no.:150.SK-T-ZA (drilled and countersunk)

with constant torque.

Cover made of chrome plated plastic.
The declared torque could boast tolerances.

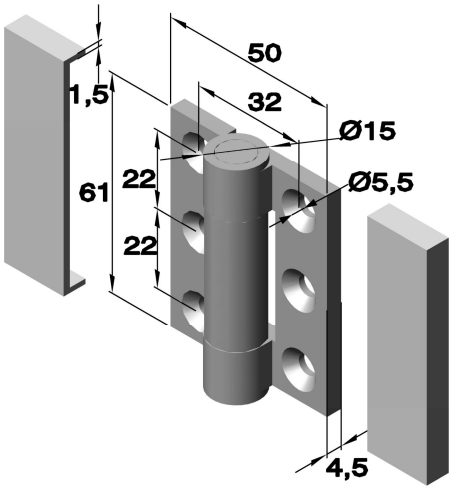

Article no.			
Series	Execution	Material Chrome plated Zamak	Torque in N.m
150.SK-T-ZA	1CR	.03	2,9
150.SK-T-ZA	2CR	.03	1,9
150.SK-T-ZA	3CR	.03	1,5

Art. no.:150.HG-TS

with constant torque.

The declared torque could boast tolerances

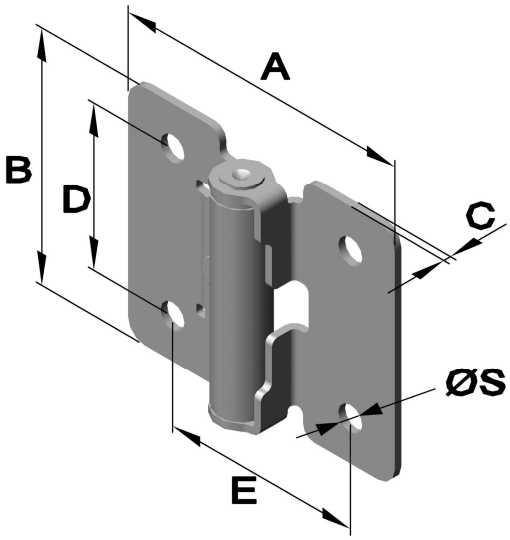

Article no.			Dimension in mm						Torque
Series	Execution	Material Raw Stainless steel	A	B	C	D	E	ØS	in N.m.
150.HG-TS	03	.30	36	32	1,2	18	21	4,3	0,35
	07	.30	48	40	1,2	26	32	4,3	0,7
	15	.30	48	50	2	36	32	4,3	1,5

Art.no.:150.SFTH (drilled)

with constant torque.

The declared torque could boast tolerances.

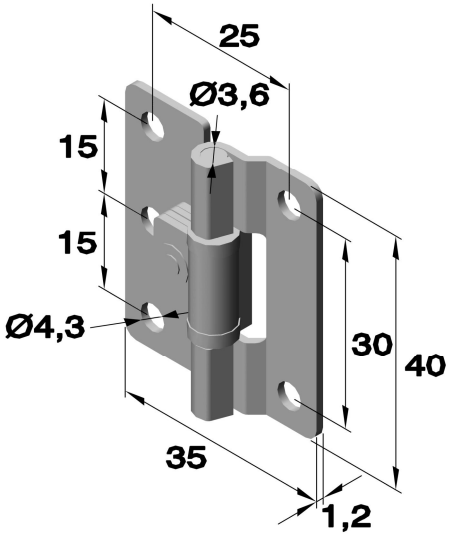

Article no.			Torque in N.m.
Series	Execution	Material Raw Stainless steel	
150.SFTH	-02-5	.30	0,5

TÜVRheinland ZERTIFIZIERT Management System ISO 9001:2015 ISO 14001:2015 www.tuv.com ID 9108624624

Further materials and surface finishes on demand. We will be pleased to give you advice.
Phone: +49 (0) 231 / 725 790 -0 eMail: info@hokon-verschlusstechnik.de
Fax: +49 (0) 231 / 725 790 -10 Homepage: www.hokon-verschlusstechnik.de

Torque hinges

Art.no.:150.SFTH (drilled)

with constant torque.

The declared torque could boast tolerances.

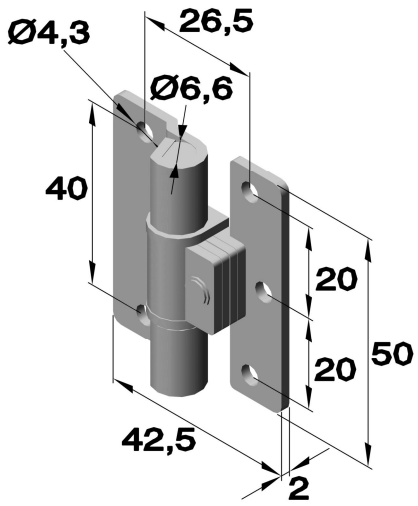

Article no.			Torque in N.m.
Series	Execution	Material Raw Stainless steel	
150.SFTH	-03-9	.30	0,9
	-03-19	.30	1,9

Art.no.:150.SFTH (drilled)

with constant torque.

The declared torque could boast tolerances.

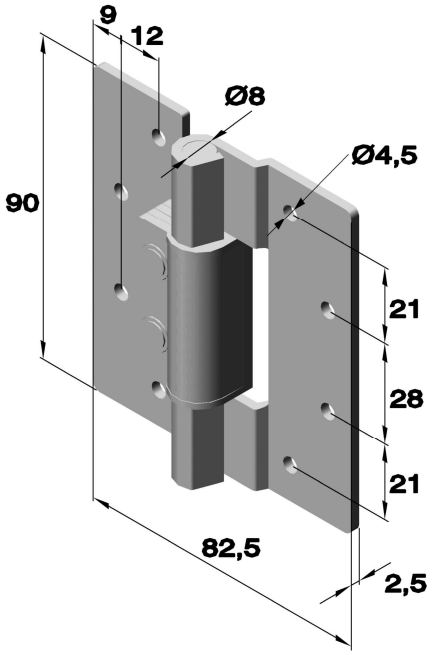

Article no.			Torque in N.m.
Series	Execution	Material Raw Stainless steel	
150.SFTH	-05-35	.30	3,4
	-05-58	.30	5,7

Art.no.:150.HG-TA (drilled)

with constant torque.

The declared torque could boast tolerances.

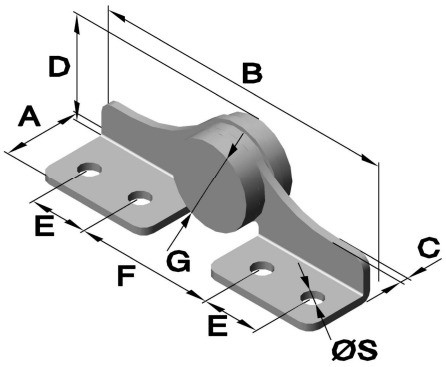

Article no.			Torque in N.m.	Dimension in mm						
Series	Execution	Material Raw Stainless steel		A	B	C	D	E	F	ØS
150.HG-TA	20L (Left)	.30	2	18,5	66	2	18	13	27	4,3
	20R (Right)	.30								
	30L (Left)	.30	3							
	30R (Right)	.30								
	45L (Left)	.30	4,5	23,5	80	2	25	15	34	5,3
	45R (Right)	.30								

Torque hinges

Art. no.:150.HG-TB

Article no.			
Series	Execution	Material Raw Stainless steel	Torque in N.m.
150.HG-TB	**20L** (Left)	.30	2
	20R (Right)	.30	
	30L (Left)	.30	3
	30R (Right)	.30	

The declared torque could boast tolerances.

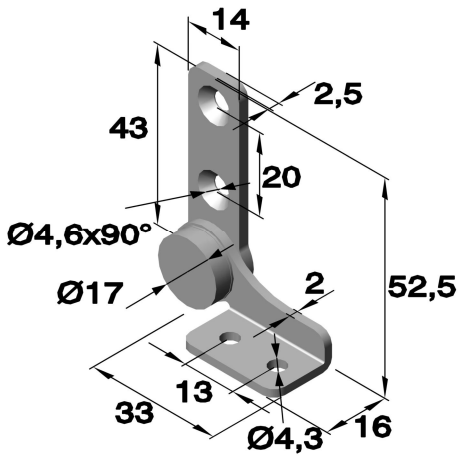

Art. no.:150.HG-TB

Article no..			
Series	Execution	Material Raw Stainless steel	Torque in N.m.
150.HG-TB	**45L** (Left)	.30	4,5
	45R (Right)	.30	

The declared torque could boast tolerances.

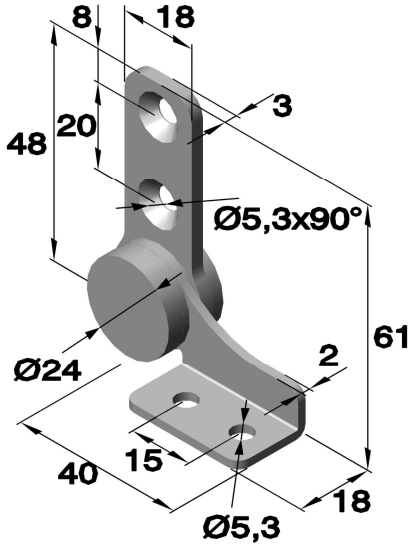

Art. no.:150.HG-IT

with constant torque.

The declared torque could boast tolerances.

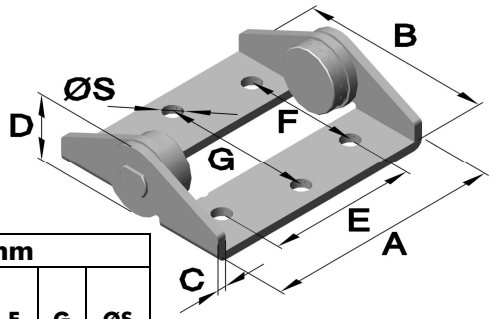

Article no.				dimension in mm							
Series	Execution	Material Raw Stainless steel	Torque in N.m.	A	B	C	D	E	F	G	ØS
150.HG-IT	**S25**	.30	2,5	54	44	2	15,5	34	26	34	4,3
	S35	.30	3,5								
	SF	.30	freerunning								
	M50	.30	5,0	54	80	2	25	34,8	36	66	5,3
	M70	.30	7,0								
	MF	.30	freerunning								

TÜVRheinland ZERTIFIZIERT
Management System ISO 9001:2015 ISO 14001:2015
www.tuv.com ID 9108624624

Further materials and surface finishes on demand. We will be pleased to give you advice.
Phone: +49 (0) 231 / 725 790 -0
Fax: +49 (0) 231 / 725 790 -10
eMail: info@hokon-verschlusstechnik.de
Homepage: www.hokon-verschlusstechnik.de

Torque hinges

Cover for Art.no.: 150.HG-IT

Article no.		Material
Series	Execution	Silver
150.HG-IT	SC	ABS
150.HG-IT	MC	ABS

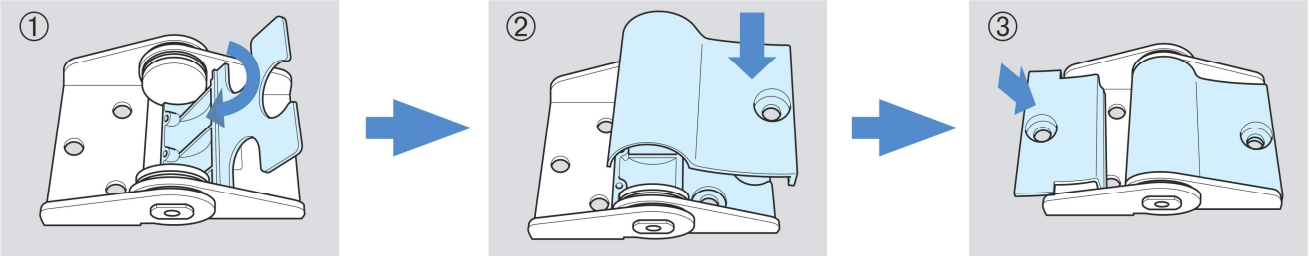

Art.no. 6493

Hinge for invisible fence with constant torque.

The declared torque could boast tolerances.

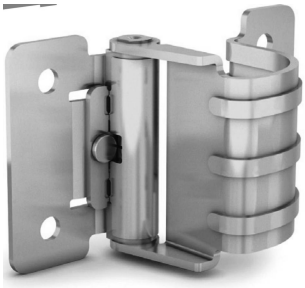

Article no			Dimensions in mm		
Series	Execution	Material: Raw / Stainless steel	A	B	C
6493	.01	.33	40	67	29,5

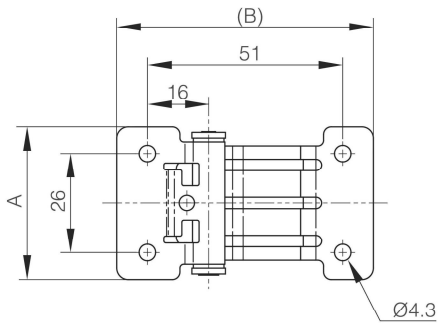

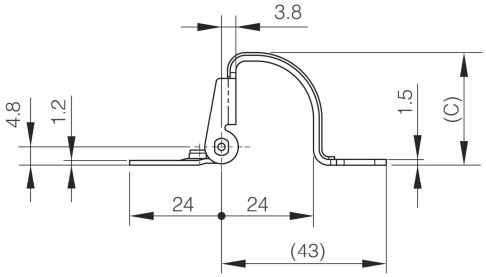

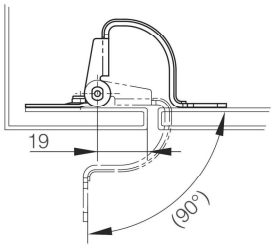

Detent hinges

Art. no.: 6874 (drilled and countersunk)

Locking position every 30° from 0° to 270°.
With 3 different available locking moments.

Also available as:
Free running hinge see chapter **„Hinges“**
Spring hinge see chapter **„Spring hinges“**
Torque hinge see chapter **„Torque hinges“**

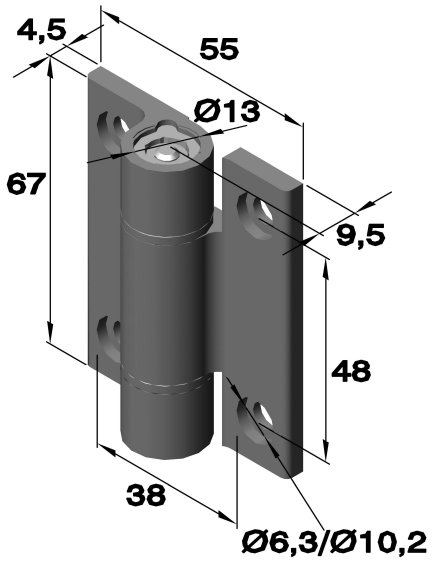

Article no.			Torque in N.m
Series	Execution	Material Black Alu. 6060 T5	
6874	.01	.77	1,8
6874	.02	.77	2,5
6874	.03	.77	3,2
6874	.04	.77	5,0

Art. no.: 6875 (drilled and countersunk)
with stainless steel pin (1.4305)

Locking positions every 90°.
Maximum weight of the door: 1.2 kg for 2 hinges.

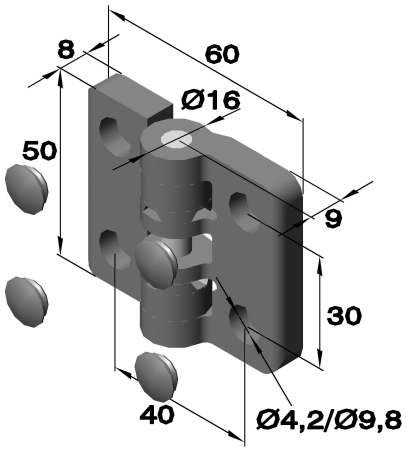

Article no.		
Series	Execution	Material Polyacetal
6875	.01	.80-Ivory
6875	.02	.80-Black

Art. no.:6871 (drilled and countersunk)

All catch pisitions 30° from 0° to 270°
Drag moment is not adjustable!

Also available as:
Spring hinge see chapter **“Spring hinges”**
Torque hinge see chapter **„Torque hinges“**

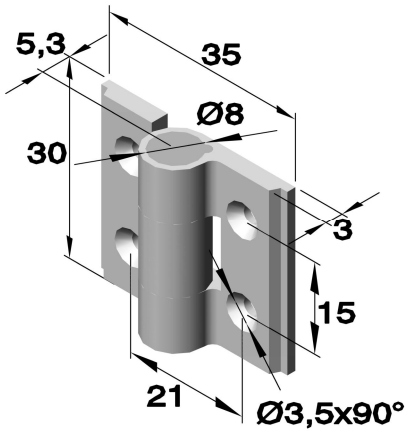

Article no.			
Series	Execution	Material Anodized pale Alu 6060 T5	Material Anodized black Alu 6060 T5
6871	.06	.71	.77

TÜVRheinland ZERTIFIZIERT Management System ISO 9001:2015 ISO 14001:2015 www.tuv.com ID 9108624624

Further materials and surface finishes on demand. We will be pleased to give you advice.
Phone: +49 (0) 231 / 725 790 -0 eMail: info@hokon-verschlusstechnik.de
Fax: +49 (0) 231 / 725 790 -10 Homepage: www.hokon-verschlusstechnik.de

Concealed hinges

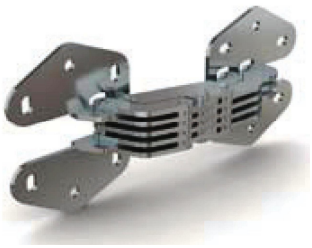

Art.:6069.05



Art.:6069.04



Art.:6103



Art.:6127



Art.:6589



Art.:6128



Art.:6069.09



Art.:6069.14



Art.:6069.00



Art.:6588



Art.:6100



Art.:6075

,

Further materials and surface finishes on demand. We will be pleased to give you advice.
Phone: +49 (0) 231 / 725 790 -0 eMail: info@hokon-verschlusstechnik.de
Fax: +49 (0) 231 / 725 790 -10 Homepage: www.hokon-verschlusstechnik.de

Concealed hinges

Ordering example:
Art.no 6001 01/02. 04/30

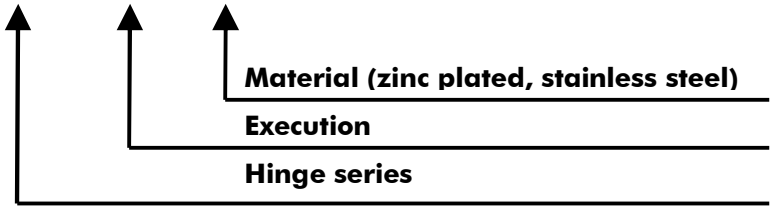

Art. no.: 6069

Hinge for invisible fence with an extractable steel pin
180° opening angle

Article no.		
Series	Execution	Material
		Raw
		Steel
6069	.00	.00

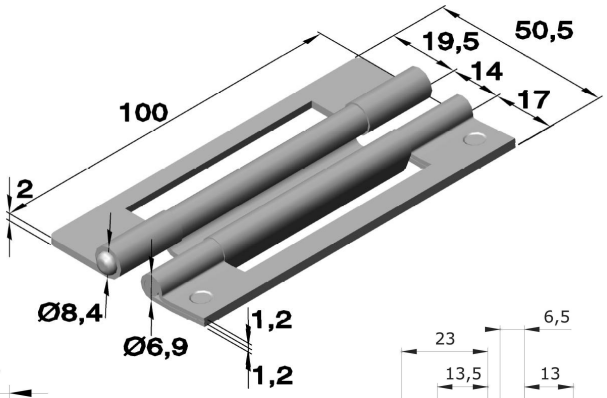

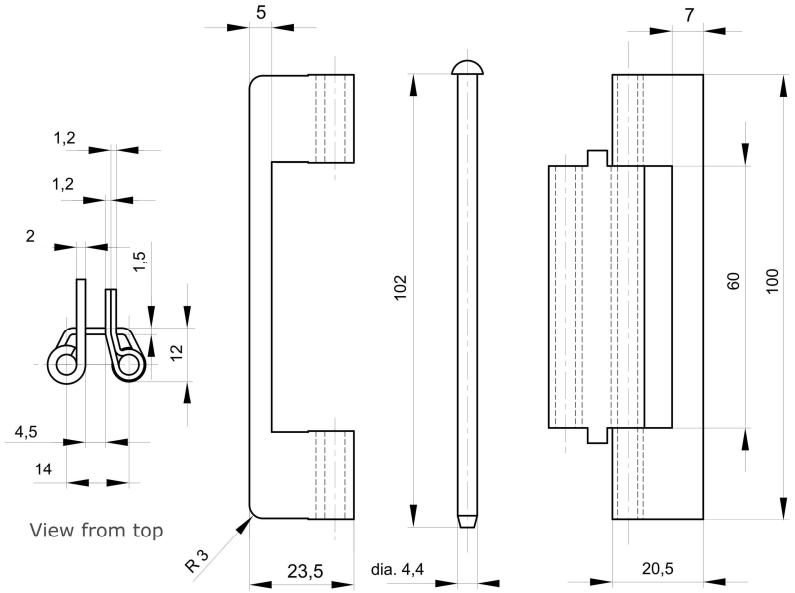

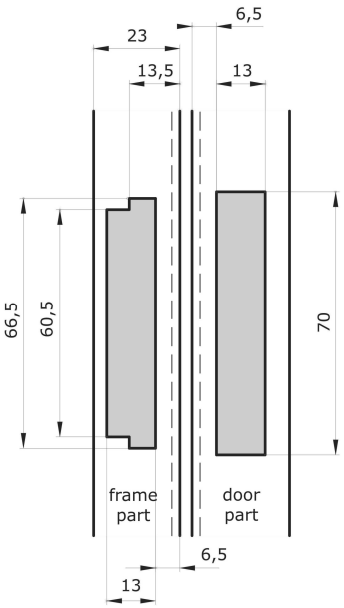

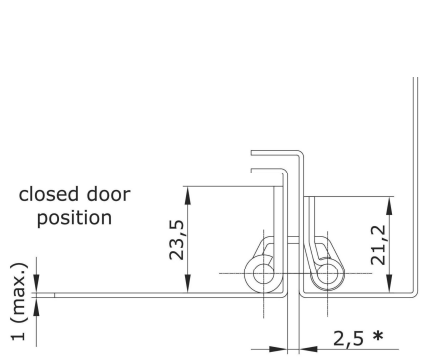

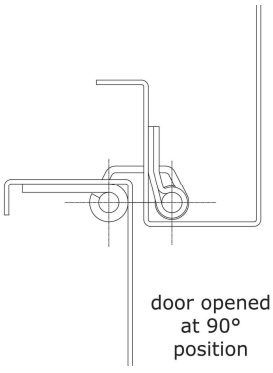

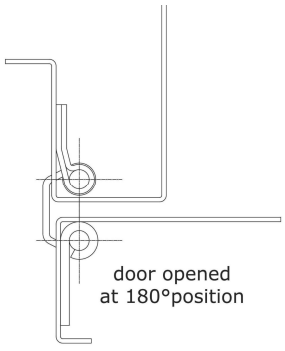

TÜVRheinland ZERTIFIZIERT
Management System ISO 9001:2015 ISO 14001:2015
www.tuv.com ID 9108624624

Further materials and surface finishes on demand. We will be pleased to give you advice.
Phone: +49 (0) 231 / 725 790 -0 eMail: info@hokon-verschlusstechnik.de
Fax: +49 (0) 231 / 725 790 -10 Homepage: www.hokon-verschlusstechnik.de

Concealed hinges

Art.no.:6069

Hinge for invisible fence with 90° opening angle

Article no.			Dimensions in mm	
Series	Execution	Material: Zinc plated / Steel	A	B
6069	.05	.04	58,6	126,5
6069	.06	.04	58,6	126,5
6069	.08	.04	58,6	126,5

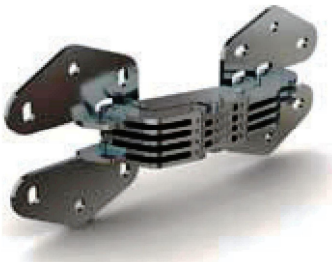

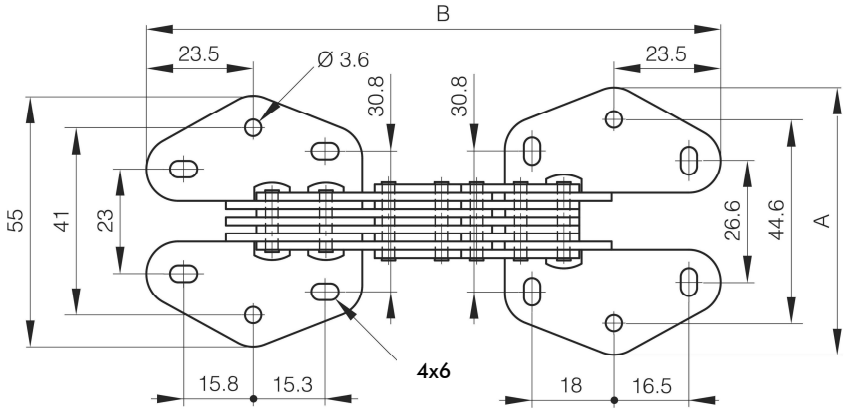

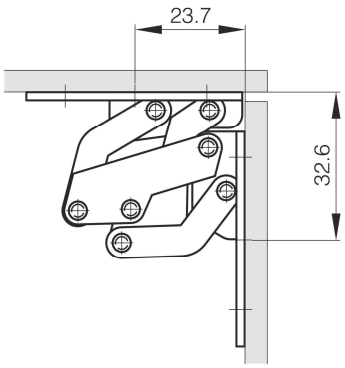

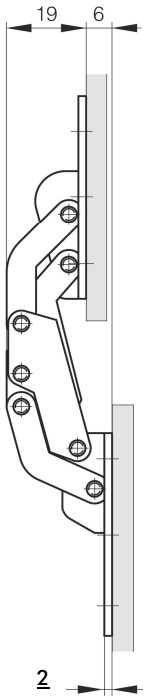

Art. no.: 6069

Hinge for invisible fence with 90° opening angle

Article no.			Dimensions in mm		
Series	Execution	Material: Zinc plated / Steel	A	B	C
6069	.04	.04	44	29	32



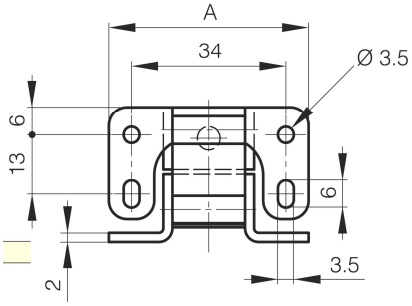

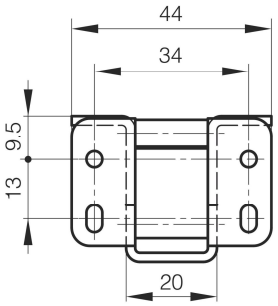

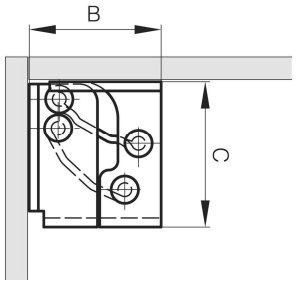

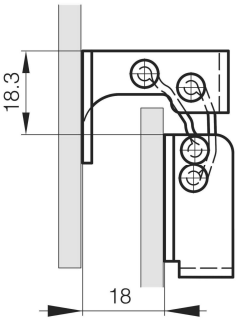

Concealed hinges

Art. no.: 6589

Hinge for invisible fence with 110° opening angle
Articulated parts made of anodized aluminium



Article no.		Dimensions in mm		
Series	Material Zinc plated Steel	A	B	C
6589	**.04**	102	80,5	76

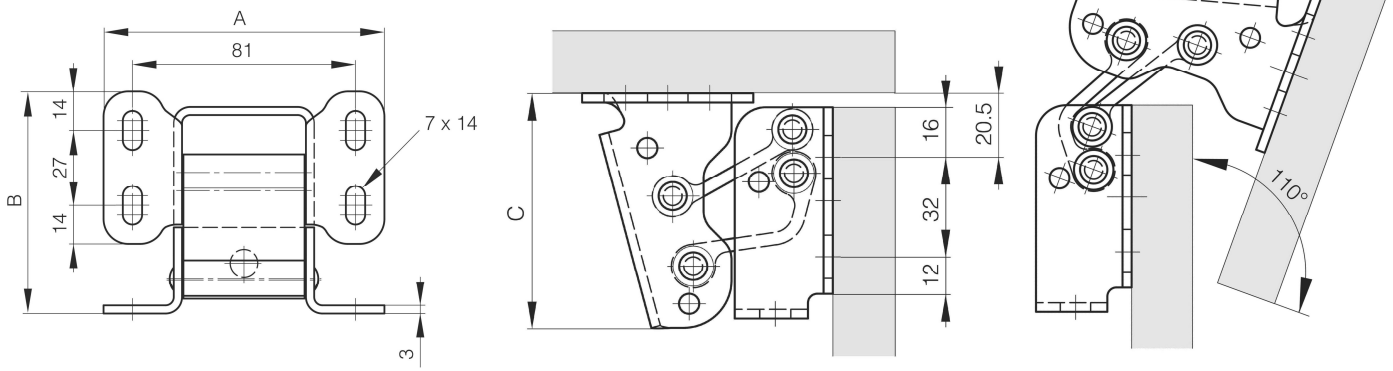

Art. no.: 6069

with fence with 180° opening angle
Articulation made of stainless steel



Article no.			Dimensions in mm										
Series	Execution	Material Chromated Zamak	A	B	C	D	E	F	G	H	S	X	Y
6069	**.09**	**.53**	43	18	32	13	11	22	5	5	3,5	≤2,3	0,8
6069	**.10**	**.53**	45	22,7	32	18,5	13	19	5	6	3,5	≤3	0,8
6069	**.11**	**.53**	60	22,2	47	18,5	13	33	6,5	6,5	4,3	≤3	1
6069	**.12**	**.53**	70	26,6	53	23	16,1	35	7	9	4,6	≤3,5	1,2
6069	**.13**	**.53**	100	33,2	80	27,5	20	52	9,5	9,5	5,3	≤4,8	1,8

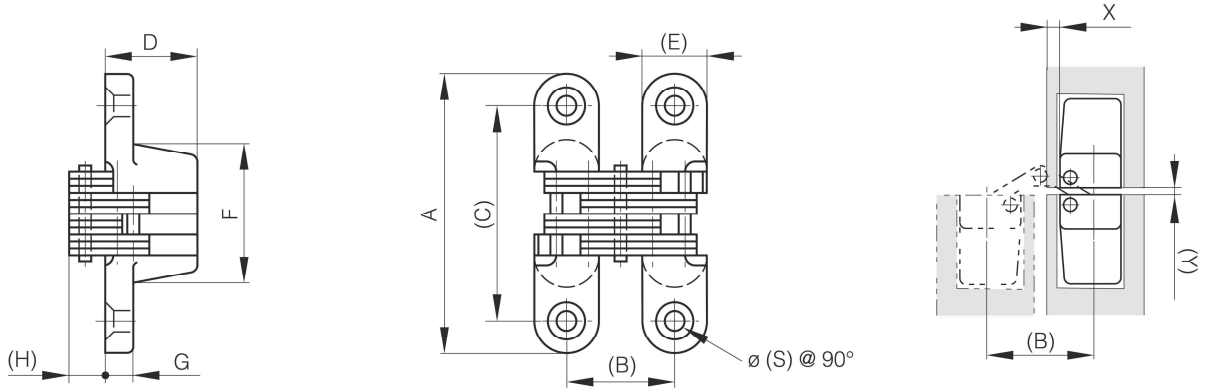

TÜVRheinland ZERTIFIZIERT
Management System
ISO 9001:2015
ISO 14001:2015
www.tuv.com
ID 9108624624

Further materials and surface finishes on demand. We will be pleased to give you advice.
Phone: +49 (0) 231 / 725 790 -0
Fax: +49 (0) 231 / 725 790 -10
eMail: info@hokon-verschlusstechnik.de
Homepage: www.hokon-verschlusstechnik.de

Concealed hinges

Art. no.: 6069

Hinge for invisible fence with 180° opening angle

Article no.			Dimensions in mm						
Series	Execution	Material Satin finished Stainless steel	A	B	C	D	E	F	S
6069	.14	.30	50	19	38	14	18,2	11	2,7



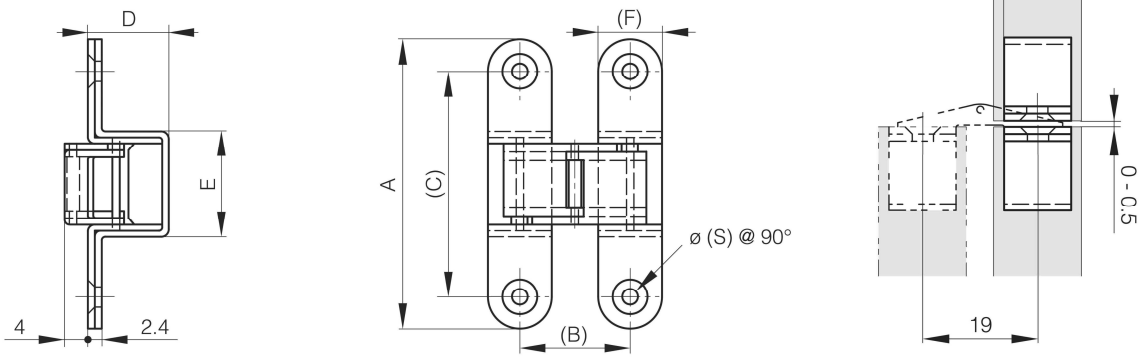

Art.no. 6491

Hinge for invisible fence with 90° opening angle

Article no.				Dimensions in mm		
Series	Execution	Material Nickel plated Steel	Raw Stainless steel 1.4401	A	B	C
6491	.01	.01	.35	44	104,5	70

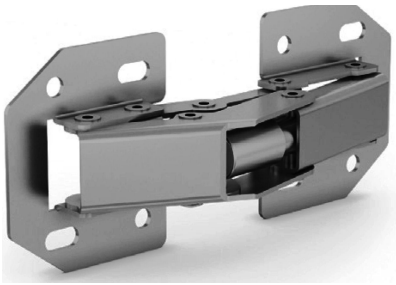

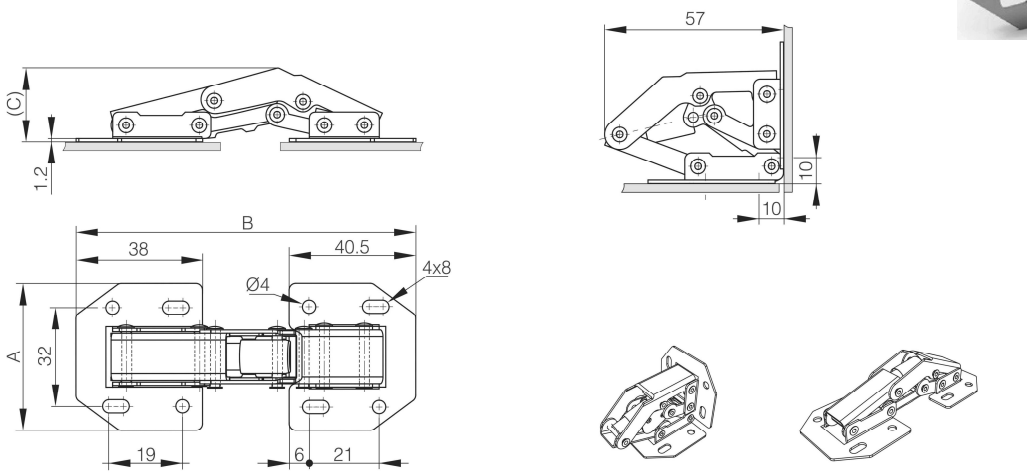

Concealed hinges

Art.no. 6492

Hinge for invisible fence with 90° opening angle

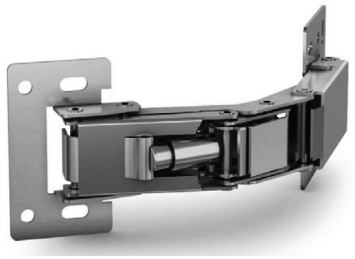

Article no.				Dimensions in mm		
Series	Execution	Material		A	B	C
		Nickel plated	Electro polished			
		Steel	Stainless steel			
6492	.01	.01	.33	52	112	81

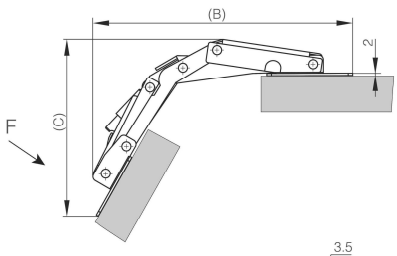

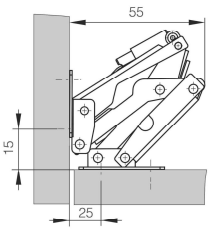

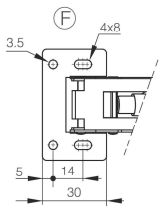

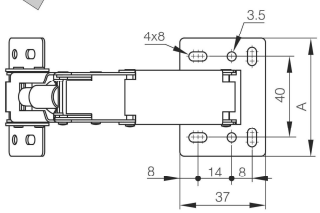

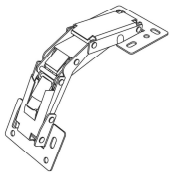

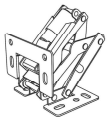

Art.no. 6493

Hinge for invisible fence with constant torques

The torque amounts 0.7 N.m(-20%/ +40%)

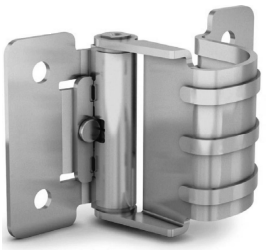

Article no.			Dimensions in mm		
Series	Execution	Material	A	B	C
		Raw			
		Stainless steel			
6493	.01	.33	40	67	29,5

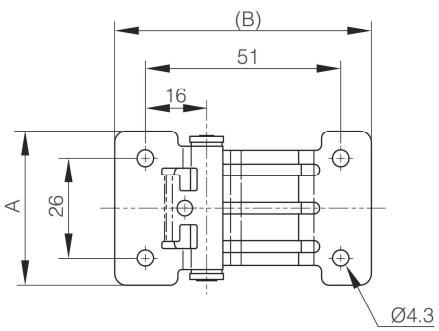

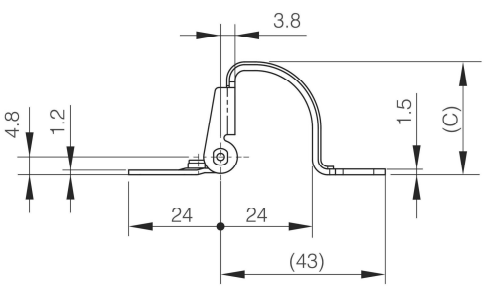

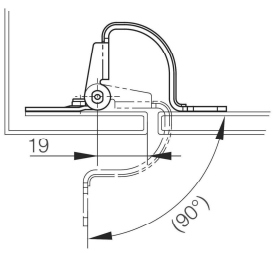

TÜVRheinland ZERTIFIZIERT
Management System
ISO 9001:2015
ISO 14001:2015
www.tuv.com
ID 9108624624

Further materials and surface finishes on demand. We will be pleased to give you advice.
Phone: +49 (0) 231 / 725 790 -0
Fax: +49 (0) 231 / 725 790 -10
eMail: info@hokon-verschlusstechnik.de
Homepage: www.hokon-verschlusstechnik.de

Concealed hinges

Art. no.: 6127

Hinge for invisible fence with 120° opening angle
With extractable pin
Hinge can be assembled at left or right direction

Article no.				Dimensions in mm			
Series	Execution	Material		A	C	D	E
		Raw	Raw				
		Steel	Stainless steel				
6127	.01	.00	.30	80	3	6	40



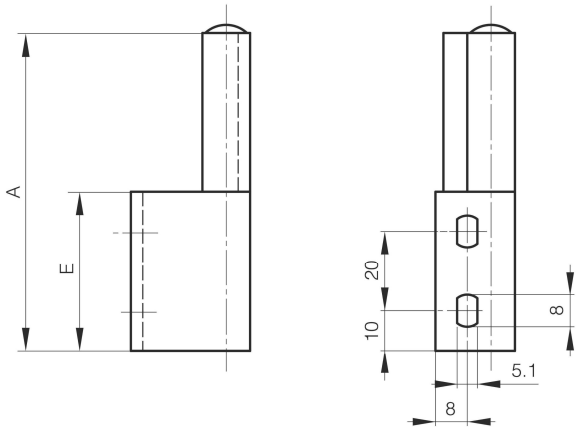

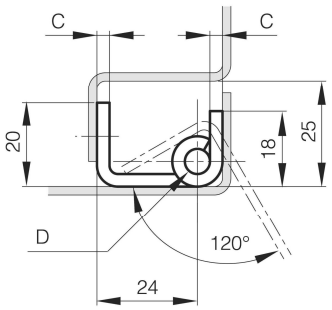

Art. no.: 6127

Hinge for invisible fence with 100° opening angle
With extractable pin
Hinge can be assembled at left or right direction

Article no.				Dimensions in mm			
Series	Execution	Material		A	C	D	E
		Raw	Raw				
		steel	Stainless steel				
6127	.02	.00	.30	80	2	4	40



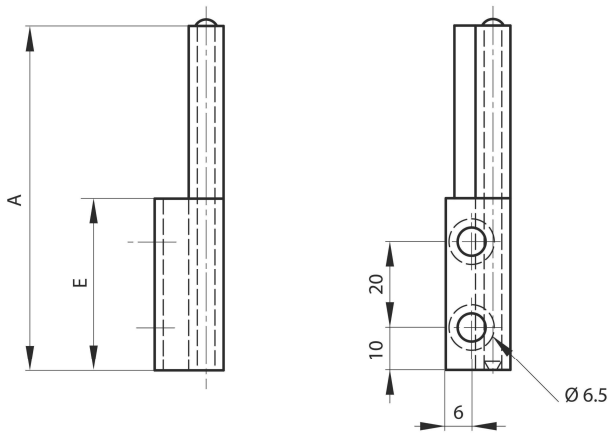

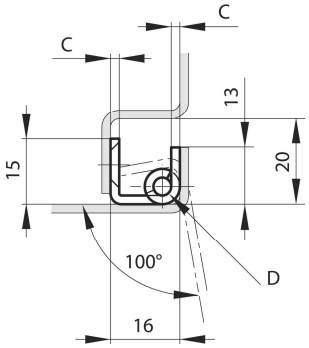

Concealed hinges

Art. no.: 6128

Hinge for invisible fence with 90° opening angle
With extractable pin
Hinge can be assembled at left or right direction

Article no.				Dimensions in mm			
Series	Execution	Material		A	B	C	D
		Raw	Raw				
		steel	Stainless steel				
6128	.01	.00	.30	80	62	4	8



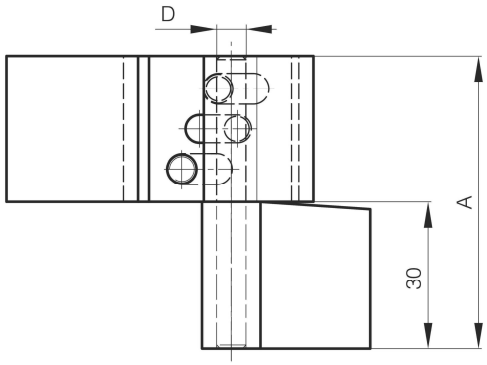

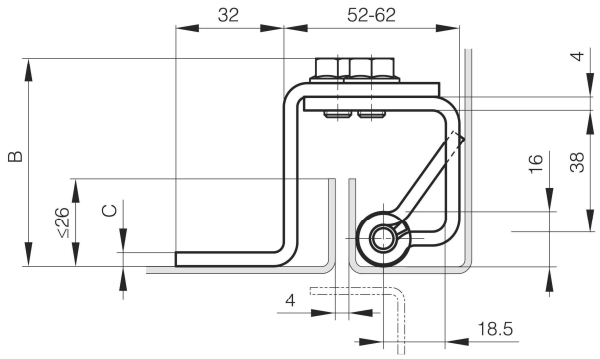

Art. no.: 6128

Hinge for invisible fence with 90° opening angle
With extractable pin
Hinge can be assembled at left or right direction

Article no.				Dimensions in mm			
Series	Execution	Material		A	B	C	D
		Raw	Raw				
		Steel	Stainless steel				
6128	.02	.00	.30	80	61	4	8



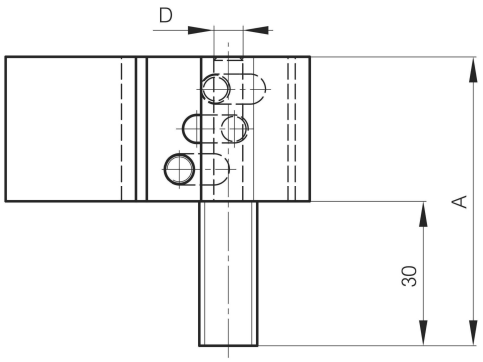

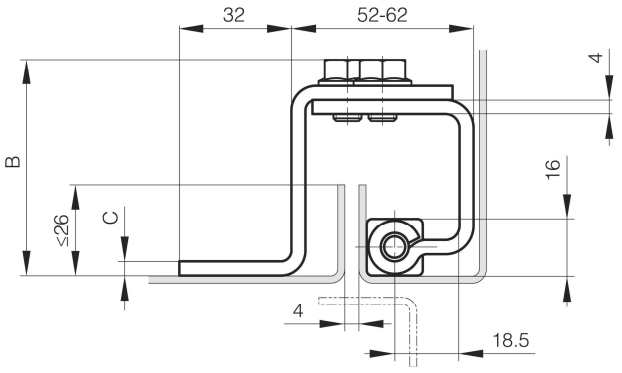

TÜVRheinland ZERTIFIZIERT
Management System ISO 9001:2015 ISO 14001:2015
www.tuv.com ID 9108624624

Further materials and surface finishes on demand. We will be pleased to give you advice.
Phone: +49 (0) 231 / 725 790 -0
Fax: +49 (0) 231 / 725 790 -10
eMail: info@hokon-verschlusstechnik.de
Homepage: www.hokon-verschlusstechnik.de

Concealed hinges

Art. no.: 6128

Hinge for invisible fence with 90° opening angle
With extractable pin
Hinge can be assembled at left or right direction



Article no.				Dimensions in mm			
Series	Execution	Material		A	B	C	D
		Raw steel	Raw Stainless steel				
6128	.03	.00	.30	60	48	3	6

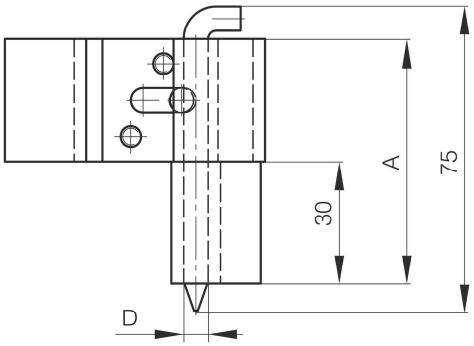

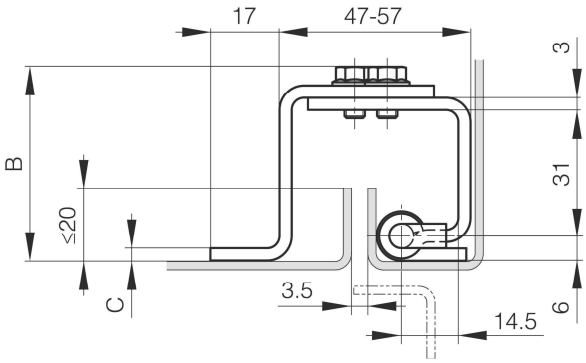

Art. no.: 6103

Hinge for invisible fence with 120° opening angle
With extractable pin



Article no.				Dimensions in mm		
Series	Execution	Material		A	C	D
		Zinc plated steel	Raw Stainless steel			
6103	.01	.04	.30	60	2,5	6
6103	.02	.04	.30	60	2,5	6
6103	.03	.04	.30	60	2,5	6

Execution: **.01**

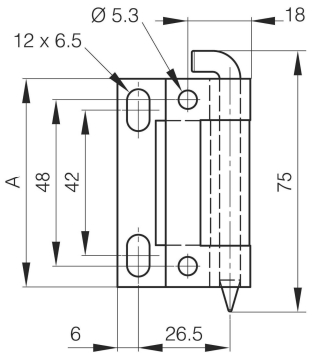

Execution: **.02**
Pin with nut

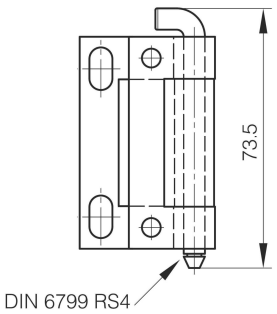

Execution: **.03**
POM pin

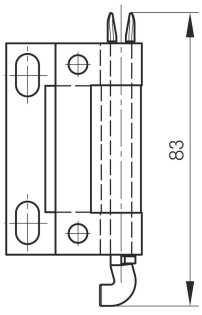

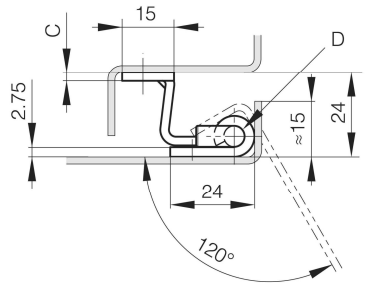

Concealed hinges

Art. no.: 6104

Hinge for invisible fence with 120° opening angle
With extractable pin



Article no.				Dimensions in mm		
Series	Execution	Material		A	C	D
		Zinc plated	Raw			
		Steel	Stainless steel			
6104	.01	.04	.30	60	2,5	6
6104	.02	.04	.30	60	2,5	6
6104	.03	.04	.30	60	2,5	6

Execution: **.01**

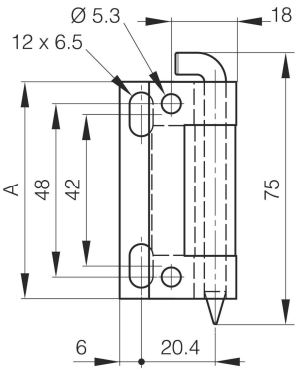

Execution: **.02**
pin with nut

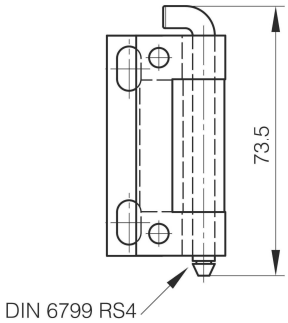

Execution: **.03**
POM pin

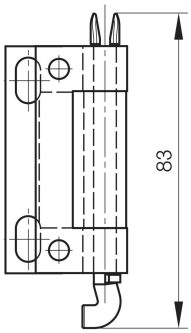

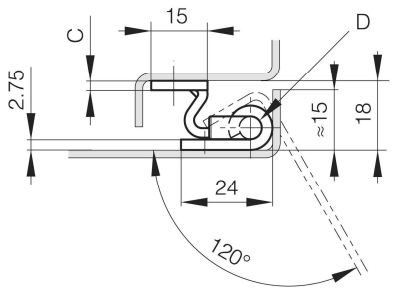

Art. no.: 6100

Hinges with spring-loaded pins
For assembly / disassembly of doors and flaps

Execution:
Left



Execution:
Right



Article no.						Dimensions in mm				
Series	Execution		Material			A	B	C	D	K
	Right	Left	Raw	Zinc plated	Raw					
			Steel	Steel	Stainless steel					
6100	.01	.02	-	.04	-	82	18,2	2,8	6	12
6100	.04	.03	.00	-	-	82	18,2	2,8	6	12
6100	.05	.06	-	-	.30	82	18,2	2,8	6	12

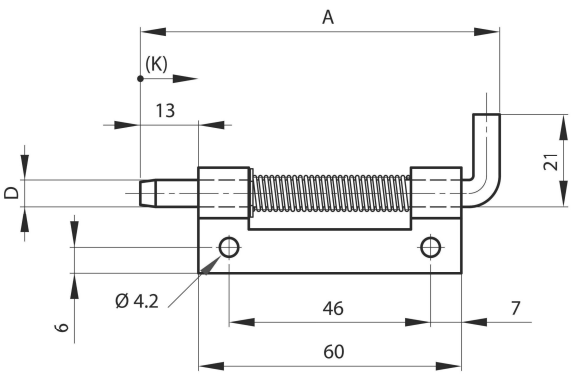

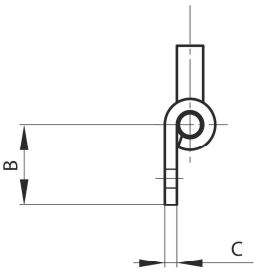

TÜVRheinland ZERTIFIZIERT
Management System
ISO 9001:2015
ISO 14001:2015
www.tuv.com
ID 9108624624

Further materials and surface finishes on demand. We will be pleased to give you advice.
Phone: +49 (0) 231 / 725 790 -0
Fax: +49 (0) 231 / 725 790 -10
eMail: info@hokon-verschlusstechnik.de
Homepage: www.hokon-verschlusstechnik.de

Concealed hinges

Art. no.: 6102

Hinges with spring-loaded pins
For assembly / disassembly of doors and flaps

Execution: **Left**



Execution: **Right**



Article no.						Dimensions in mm				
Series	Execution		Material			A	B	C	D	K
	Right	Left	Raw Steel	Zinc plated Steel	Raw Stainless steel					
6102	.01	.02	.00	-	-	82	21	14	5	12
6102	.03	.04	-	.04	-	82	21	14	5	12
6102	.06	.05	-	-	.30	82	21	14	5	12

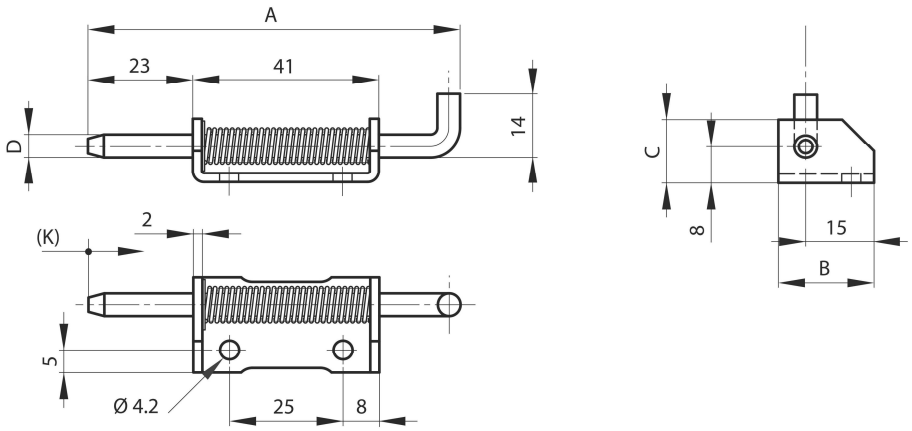

Art. no.: 6075

Hinges with spring-loaded pins
For assembly / disassembly of doors and flaps



Article no.			Dimensions in mm		
Series	Execution	Material Raw Steel	A	B	K
6075	.01	.00	53	15	15

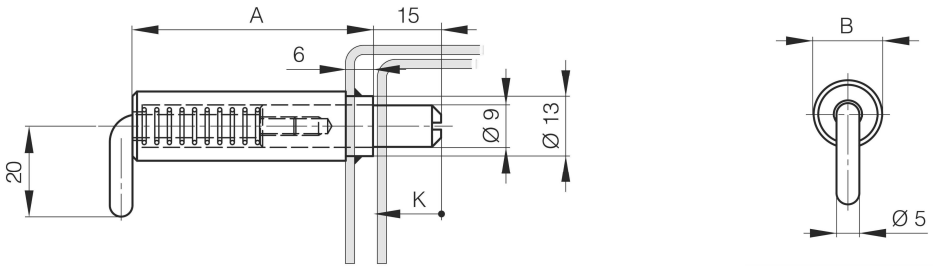

Concealed hinges

Art. no.: 6588

Two part hinge for the invisible fence
With spring-loaded pin for assembly / disassembly of doors and flaps

Article no.			Dimensions in mm			
Series	Execution	Material Raw Stainless steel	A	B	E	W
6588	**.01**	**.30**	126	17,5	3	122°
6588	**.02**	**.30**	126	20,5	4	117°
6588	**.03**	**.30**	126	23,5	4,5	112°

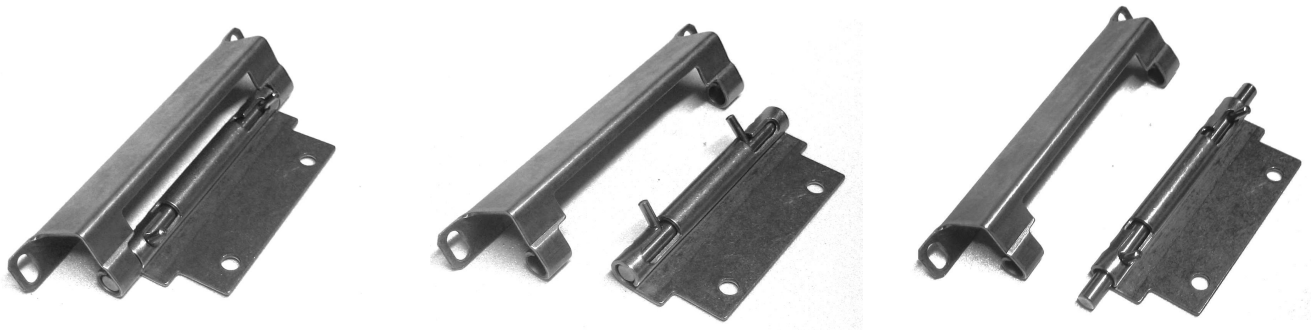

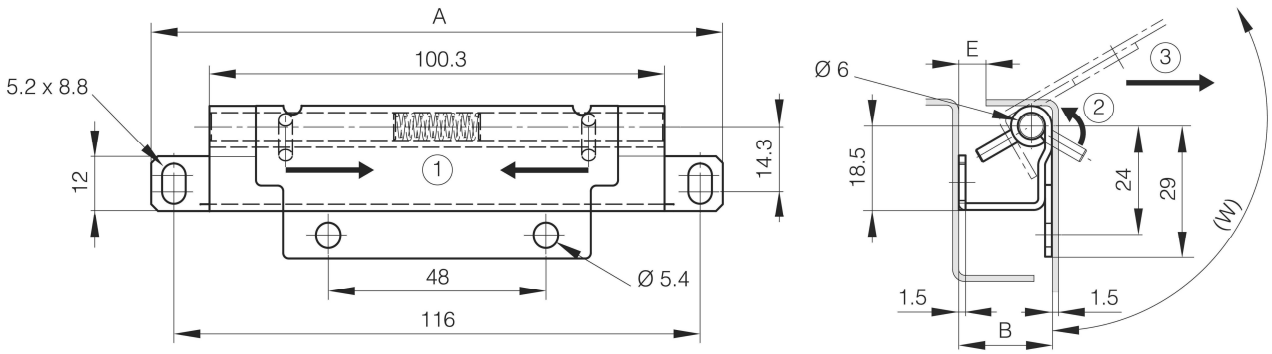

TÜVRheinland ZERTIFIZIERT
Management System ISO 9001:2015 ISO 14001:2015
www.tuv.com ID 9108624624

Further materials and surface finishes on demand. We will be pleased to give you advice.
Phone: +49 (0) 231 / 725 790 -0
Fax: +49 (0) 231 / 725 790 -10
eMail: info@hokon-verschlusstechnik.de
Homepage: www.hokon-verschlusstechnik.de

HoKon
VERSCHLUSSTECHNIK &
SONDERKONSTRUKTIONEN

Hinges for vehicle construction and plant engineering

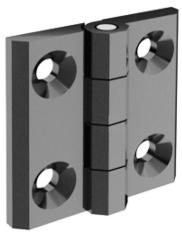

Art.no.: HF10



Art.no.: HF10



Art.no.: HF10



Art.no.: HF30

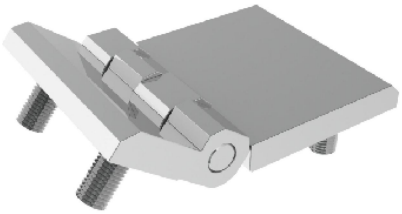

Art.no.: HF40



Art.no.: HC90

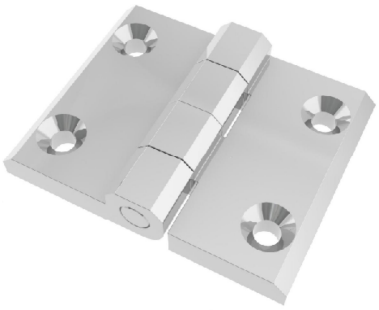

Art.no.: HF50

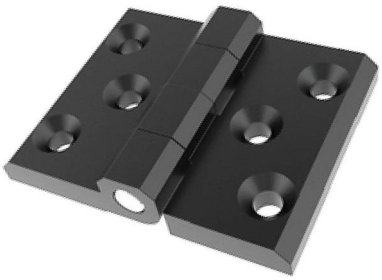

Art.no.: HF50



Art.no.: HF59



Art.no.: HS50



Art.no.: HC10



Art.no.: HS40

Hinges for vehicle construction and plant engineering

Art.no.:HF10 (with threaded pin)
with pin in stainless steel

Article no.		
Series	Material	
	Chrome plated	Black coated
	Zamak	Zamak
HF10	ED-T1	EH-T1

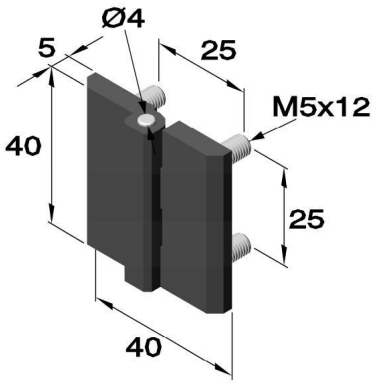

Art.no.:HF30 (with threaded pin)
with pin in stainless steel

Article no.		
Series	Material	
	Chrome plated	Black coated
	Zamak	Zamak
HF30	ED-T1	EH-T1

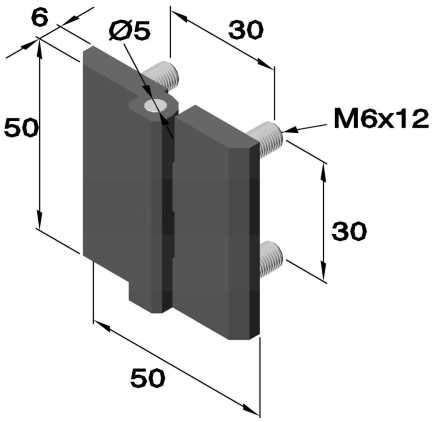

Art.no.:HF 50 (with threaded pin)
with pin in stainless steel

Article no.		
Series	Material	
	Chrome plated	Black coated
	Zamak	Zamak
HF50	ED-T1	EH-T1

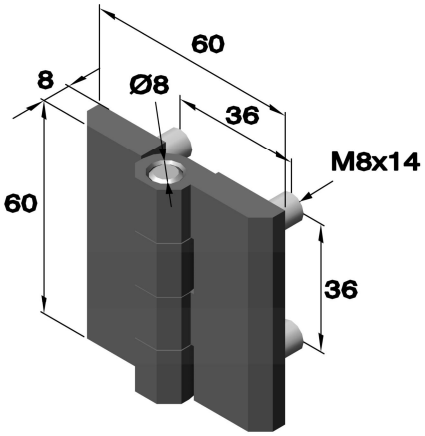

Art.no.:HF30 (with threaded pin)
with pin in stainless steel

Article no.		
Series	Material	
	Chrome plated	Black coated
	Zamak	Zamak
HF30	ED-T11	EH-T11

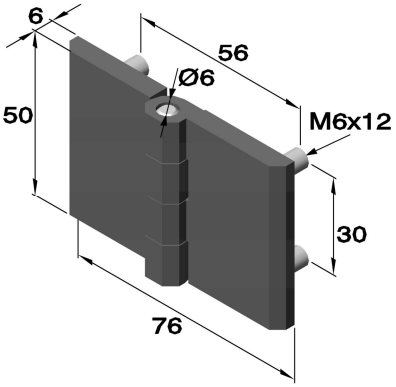

TÜVRheinland ZERTIFIZIERT
Management System
ISO 9001:2015
ISO 14001:2015
www.tuv.com ID 9108624624

Further materials and surface finishes on demand. We will be pleased to give you advice.
Phone: +49 (0) 231 / 725 790 -0
Fax: +49 (0) 231 / 725 790 -10
eMail: info@hokon-verschlusstechnik.de
Homepage: www.hokon-verschlusstechnik.de

Hinges for vehicle construction and plant engineering

Art.no.:HF40 (with threaded pin)
with pin in stainless steel

Article no.		
Series	Material	
	Chrome plated	Black coated
	Zamak	Zamak
HF10	ED-T2	EH-T2

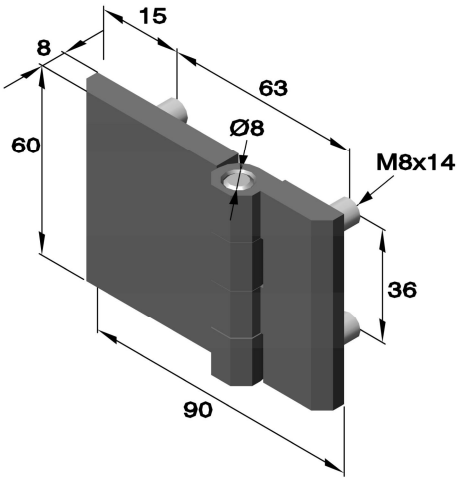

Art.no.:HF01 (drilled and countersunk)
with pin in stainless steel

Article no.	
Series	Material
	Black coated
	Zamak
HF01	EH-T3

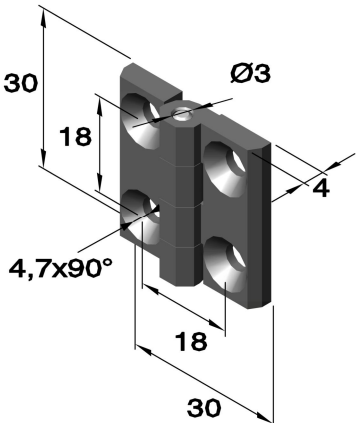

Art.no.:HF10 (drilled and countersunk)
with pin in stainless steel

Article no.				
Series	Material			
	Chrome plated	Black coated	Satin finished	Black
	Zamak	Zamak	Stainless steel	Polyamide
HF30	ED-T3	EH-T3	ES-T3	K-T3

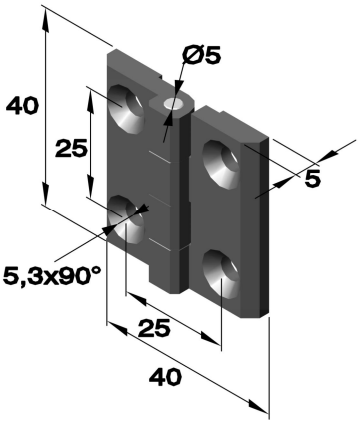

Art.no.:HF30 (drilled and countersunk)
with pin in stainless steel

Article no.				
Series	Material			
	Chrome plated	Black coated	Satin finish	Black
	Zamak	Zamak	Stainless steel	Polyamide
HF30	ED-T4	EH-T4	ES-T4	K-T4

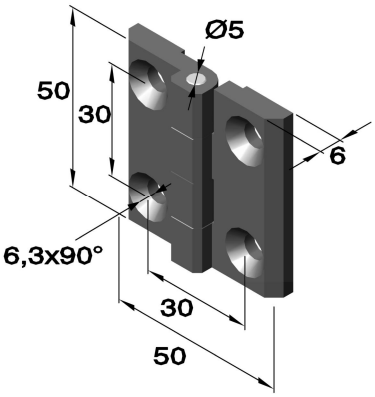

Hinges for vehicle construction and plant engineering

Art.no.:HF50 (drilled and countersunk)
with pin in stainless steel

Article no.	
Series	Material
	Satin finish
	Stainless steel
HF50	ES-T3

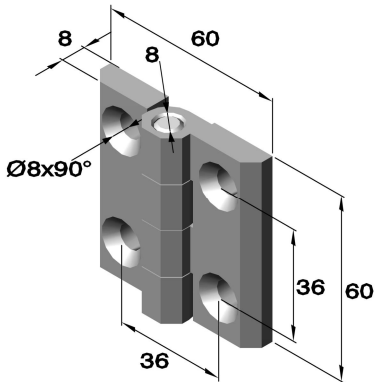

Art.no.:HF30 (drilled and countersunk)
with pin in stainless steel

Article no.			
Series	Material		
	Chrome plated	Black coated	Satin finished
	Zamak	Zamak	Stainless steel
HF30	ED-T10	EH-T10	ES-T10

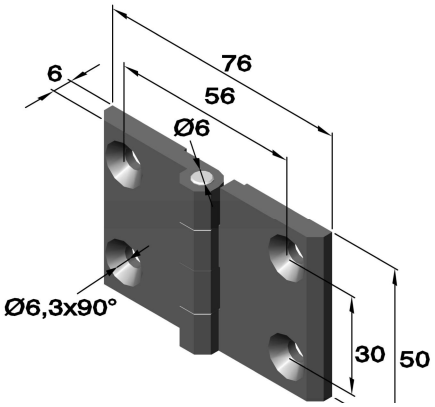

Art.no.:HF50 (drilled and countersunk)
with pin in stainless steel

Article no.	
Series	Material
	Black coated
	Zamak
HF50	EH-T10-1

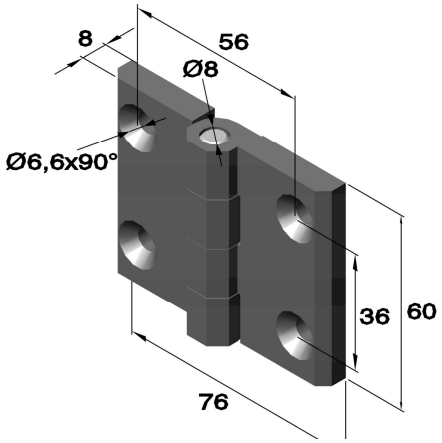

Art.no.:HF50 (drilled and countersunk)
with pin in stainless steel

Article no.	
Series	Material
	Black coated
	Zamak
HF50	EH-T13-1

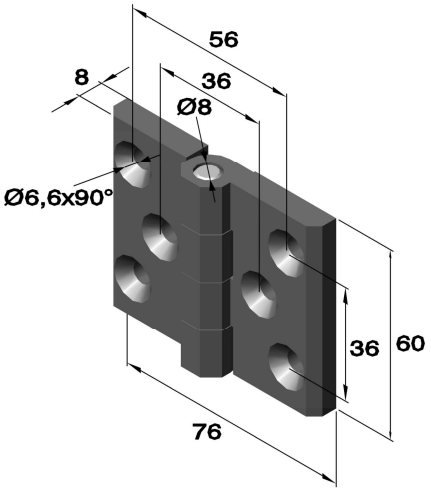

TÜVRheinland ZERTIFIZIERT
Management System ISO 9001:2015 ISO 14001:2015
www.tuv.com ID 9108624624

Further materials and surface finishes on demand. We will be pleased to give you advice.
Phone: +49 (0) 231 / 725 790 -0 eMail: info@hokon-verschlusstechnik.de
Fax: +49 (0) 231 / 725 790 -10 Homepage: www.hokon-verschlusstechnik.de

Hinges for vehicle construction and plant engineering

Art.no.:HF40 (drilled and countersunk)
with pin stainless steel

Article no		
Series	Material	
	Satin finished	Black coated
	Stainless steel	Zamak
HF40	ES-T3-1	EH-T3-1

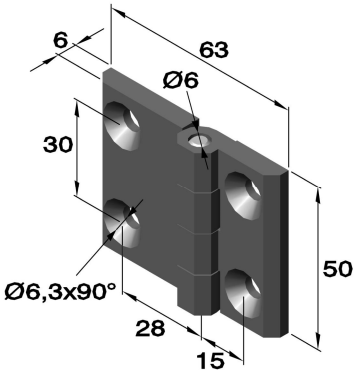

Art.no.:HC90 (drilled and countersunk)
with pin in hardened steel

Article no.				Dimensions in mm
Series	Material			
	Chrome plated	Black coated	Satin finished	
	Zamak	Zamak	Stainless steel	H
HC90	ED-T-0	EH-T-0	ES-T-0	0
HC90	ED-T-10	EH-T-10	ES-T-10	10
HC90	ED-T4	EH-T4	-	4
HC90	ED-T6	EH-T6	-	6

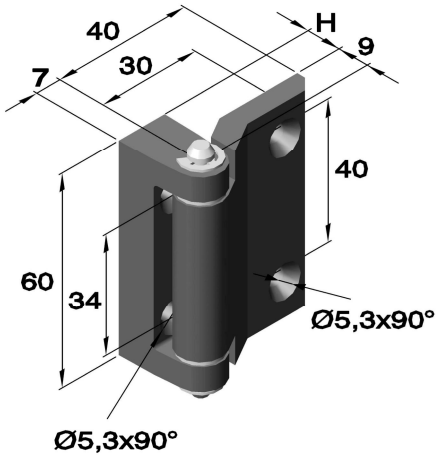

Art.no.:HF59 (with threaded pins)
with zinc plated pin

Article no.		
Series	Material	Execution
	Black coated	
	Zamak	
HF59	EH-1	Right
HF59	EH-2	Left

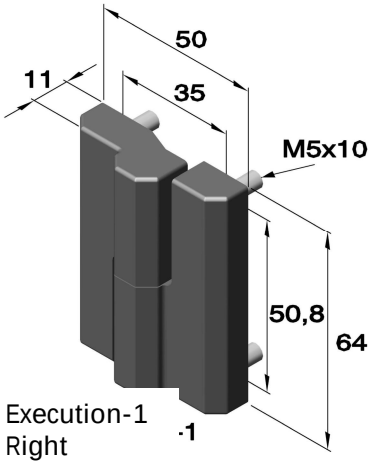

Execution-1
Right

Art.no.:HS40 (drilled and countersunk)
with pin in stainless steel

Article no.		
Series	Material	
	Chrome plated	Black coated
	Zamak	Zamak
HS40	ED-19	EH-19

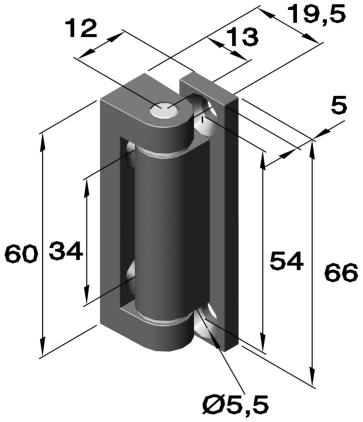

Hinges for vehicle construction and plant engineering

Art.no.:HS40 (drilled and countersunk)
with pin in stainless steel

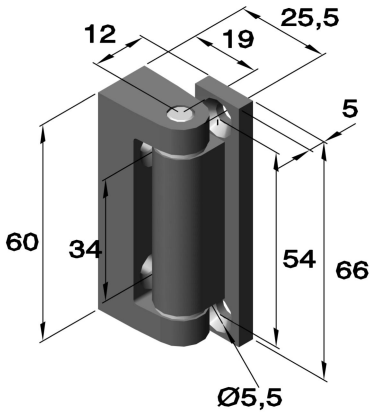

Article no.		
Series	Material	
	Chrome plated	Black coated
	Zamak	Zamak
HS40	ED-25	EH-25

Art.no.:HS50 (with internal thread)
with pin in stainless steel

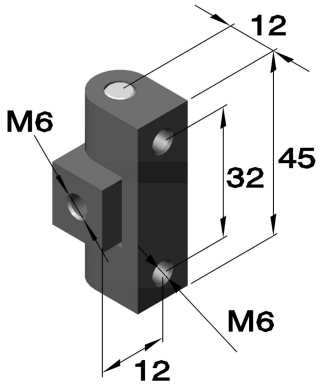

Article no.		
Series	Material	
	Chrome plated	Black coated
	Zamak	Zamak
HS50	ED-1	EH-1

Art.no.:HC10 (with internal thread)
with zinc plated pin

Plate thickness 1,5-2,0mm

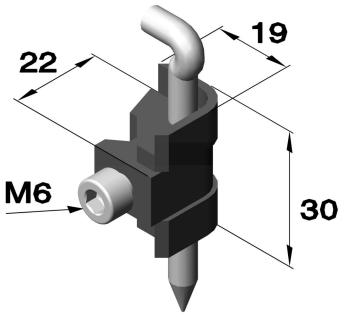

Article no.				
Series	Material			
	Chrome plated	Black coated		Sheet thickness
	Zamak	Zamak	Zamak	2,2mm
HC10	ED-	EH-	ES-	T20-1

Sheet metal cutout

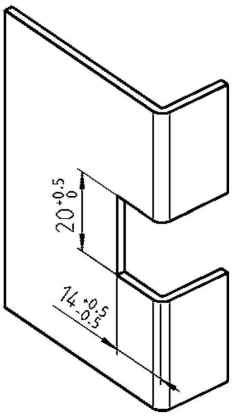

TÜVRheinland ZERTIFIZIERT
Management System
ISO 9001:2015
ISO 14001:2015
www.tuv.com ID 9108624624

Further materials and surface finishes on demand. We will be pleased to give you advice.
Phone: +49 (0) 231 / 725 790 -0
Fax: +49 (0) 231 / 725 790 -10
eMail: info@hokon-verschlusstechnik.de
Homepage: www.hokon-verschlusstechnik.de

Aluminium hinges



Art.:6087



Art.:6023



Art.:6022



Art.:6848.70

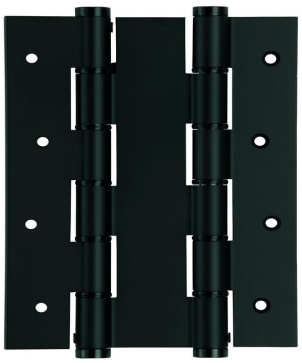

Art.:158.5914



Art.:6876



Art.: 6088



Art.: 6872



Art.: 6871



Art.:158.5314



Art.:158.5414



Art.:158.5814



Art.:158.6117



Art.:158.6117

Aluminium hinges

Aluminium piano hinge

rolled

Art.no.	Material		Dimensions in mm				
	Rod	Pin	A	B	C	D Pin Ø	E
6716.70	Aluminium	Steel	2000	20	0,6	2,4	15
6725.70	Aluminium	Steel	2000	25	0,8	2	15
6755.70	Aluminium	Aluminium	2000	35	1	3	30
6769.70	Aluminium	Aluminium	2000	40	1,2	3	20
6776.70	Aluminium	Aluminium	2040	40	1,5	6	15
6784.70	Aluminium	Aluminium	2000	50	1,2	3	20
6786.70	Aluminium	Aluminium	2000	50	1,5	4	15
6806.70	Aluminium	Aluminium	2000	60	2	6	30
6820.70	Alu 5754	Aluminium	2000	80	3	6	40

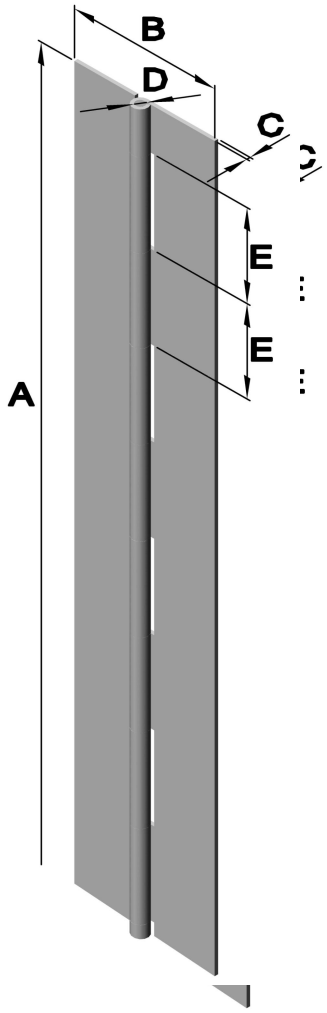

Aluminium profile hinge

Width 50

Art no.	Material		Dimensions in mm				
	Rod	Pin	A	B	C	D Pin Ø	E
6848.70	Alu 6060 T5	Stainless steel	2000	50	3	5,2	35,5

On request hinges can be delivered in different length.
execution drilled on request.

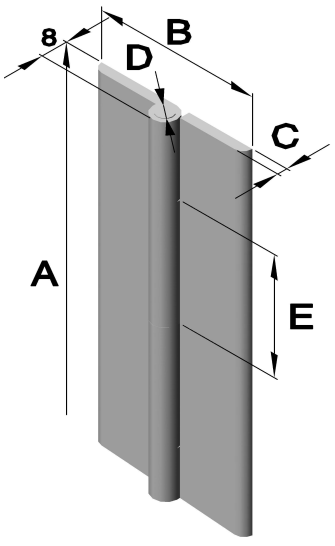

Management System ISO 9001:2015 ISO 14001:2015 TÜVRheinland ZERTIFIZIERT www.tuv.com ID 9108624624

Further materials and surface finishes on demand. We will be pleased to give you advice.
Phone: +49 (0) 231 / 725 790 -0 EMail: info@hokon-verschlusstechnik.de
Fax: +49 (0) 231 / 725 790 -10 Home page: www.hokon-verschlusstechnik.de

Aluminium hinges

Aluminium profile hinge

Art no.	Material		Dimensions in mm				
	Rod	Pin	A	B	C	D Pin Ø	E
6841.71	Alu 6082 T5	Stainless steel	915	31,75	1,3	2,2	12,7
6849.70	Alu 6082 T5	Stainless steel	1830	31,75	1,3	2,2	12,7
6842.70	Alu 6082 T5	Stainless steel	915	44,45	1,3	2,2	12,7
6843.71	Alu 6082 T5	Stainless steel	1830	44,45	1,3	2,2	12,7
6845.70	Alu 6082 T5	Stainless steel	915	63,5	1,3	2,2	12,7
6847.71	Alu 6082 T5	Stainless steel	1830	63,5	1,3	2,2	12,7

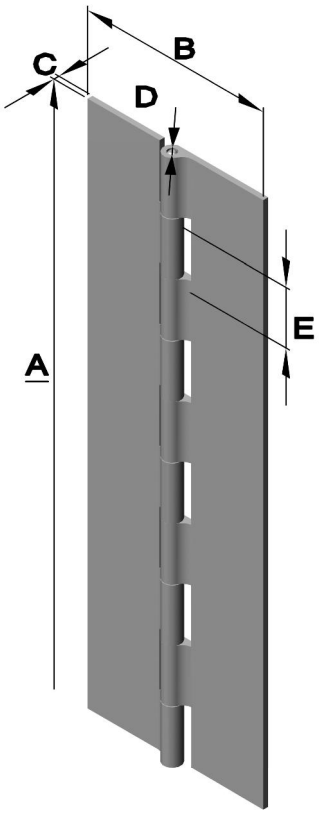

On request hinges can be delivered in different length.
Execution drilled on request.

Aluminium profile hinge with double joint

Opening angle 180° (must be ordered separately)

Art no.	Material		Dimension in mm		
	Rod	Pin	A	B	D Pin Ø
6850.70	Alu 6060 T5	Stainless steel	2000	65	5
6851.70	Alu 6060 T5	Stainless steel	2500	15	5
6852.70	Alu 6060 T5	Stainless steel	3000	115	5

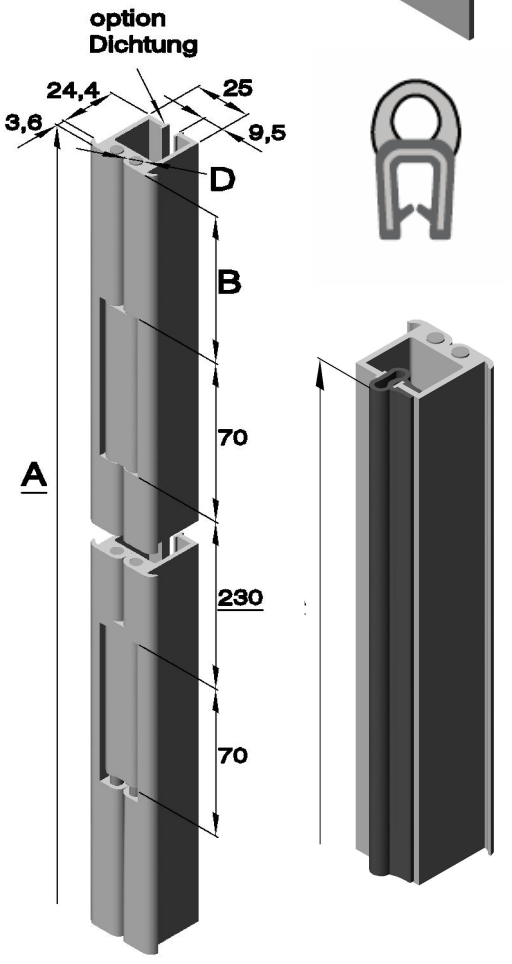

Sealing

for hinges with double joint

Art no.	Material	Dimension in mm
		A
6853.D	Rubber black	2000
6854.D	Rubber black	2500
6855.D	Rubber black	3000

Aluminium hinges

Art.Nr. 6540 (drilled and countersunk)
Cantilevered

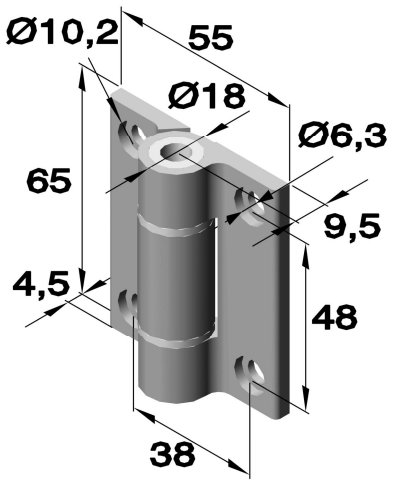

Article no.			
Series	Execution	Material	
		Aluminium 6060 T5	
		Silver	Black
6540	.01 without plug	.70	.77
6540	.02 with plug	.70	.77

Art no.6872/6873
with integrated spring

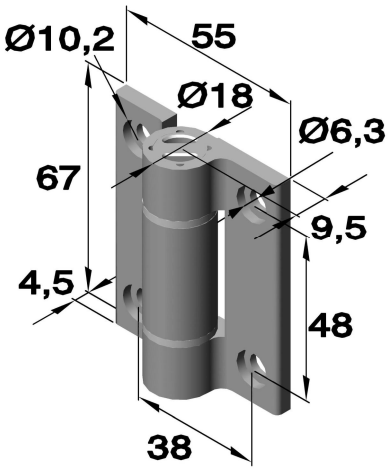

Also available:
Cantilever hinge see chapter F-41
Torque hinge see chapter F-71
Rest torque see chapter F-76

Article no.				Spring force in N.m		
Series	Execution	Material		0°	90°	180°
		Aluminium 6060 T5				
		Silver	Black			
6872	.01 Opening	.70	.77	0,23	0,45	0,7
6872	.03 Closing	.70	.77	0,23	0,45	0,7
6872	.02 Opening	.70	.77	0,12	0,24	0,35
6872	.04 Closing	.70	.77	0,12	0,24	0,35
6873	.01 Opening	.70	.77	0,9	1,1	1,3
6873	.02 Closing	.70	.77	0,9	1,1	1,3

Art.Nr.:6874(gelocht und gesenkt)
Rest torque

Rest positions all 30° from 0° to 270°.
With 3 different detent moments available.

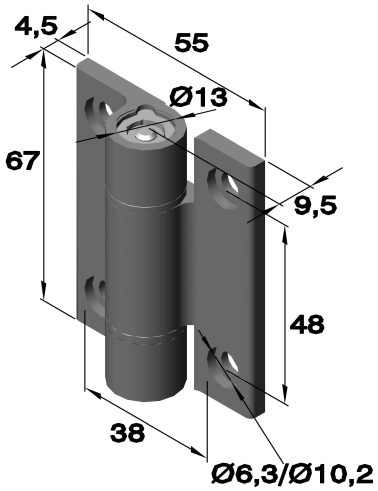

Article no.			Detent moment
Series	Execution	Material	
		Black	
		Alu 6060 T5	
6874	.01	.77	1,8 N.m
6874	.02	.77	2,5 N.m
6874	.03	.77	3,2 N.m
6874	.04	.77	5,0 N.m

TÜVRheinland ZERTIFIZIERT Management System ISO 9001:2015 ISO 14001:2015 www.tuv.com ID 9108624624

Further materials and surface finishes on demand. We will be pleased to give you advice.
Phone: +49 (0) 231 / 725 790 -0 EMail: info@hokon-verschlusstechnik.de
Fax: +49 (0) 231 / 725 790 -10 Home page: www.hokon-verschlusstechnik.de

Aluminium hinges

Art.no.:6871 (perforated and countersunk)
Torque hinge

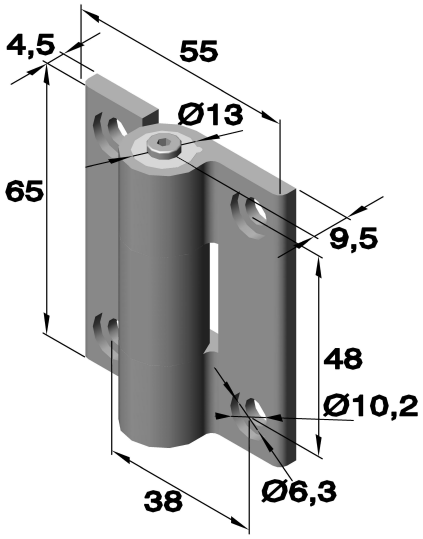

Holding torque: 0 - 5 N.m max.
Adjusting screw: internal hex 4
Temperature stability: -20 °C bis + 80 °C

Max. tensile strength : 6000 N
Max. shear strength: 5000 N

Article no.			
Series	Execution	Material	
		Colorless	Black
		Alu 6060 T5	Alu 6060 T5
6871	.04	.70	.77

Art.no.:6871 (perforated and countersunk)
Torque hinge

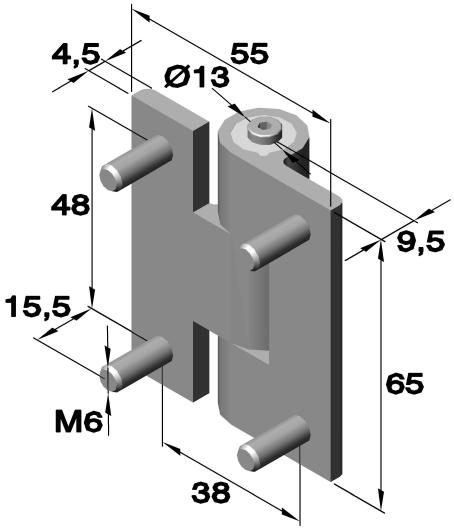

Holding torque: 0 - 5 N.m max.
Adjusting screw: internal hex 4
Temperature stability: -20 °C bis + 80 °C

Max. tensile strength : 6000 N
Max. shear strength: 5000 N

Article no.			
Series	Execution	Material	
		Raw	Black
		Alu 6060 T5	Alu 6060 T5
6871	.05	.70	.77

Art.no. 6088 (drilled and countersunk)
with spring and intermediate ring made of nylon

Execution
Right (.06)

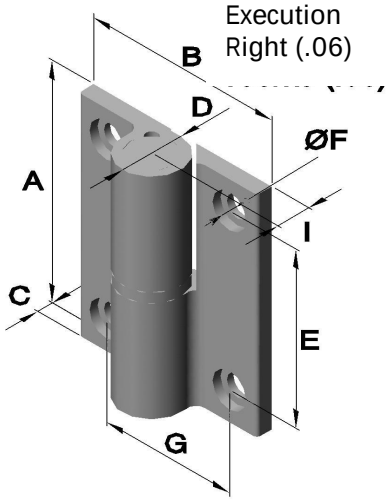

The hinge moves itself automatically
back to the initial position with an
opening angle of up to 80°.
Above 80° the spring function is cancelled.
The left execution (.05) is a mirror image
to the right execution (.06).

Article no.				Dimensions in mm							
Series	Execution		Material	A	B	C	D	E	Ø F	G	I
	Left	Right	Aluminium 6060 T5								
6088	.05	.06	.77 (Silver)	65	55	4,5	18	48	6,5-10,4	38	9,5
6088	.07	.08	.77 (Black)	65	55	4,5	18	48	6,5-10,4	38	9,5

Aluminium hinges

Art.no. 6876 (drilled and countersunk)
Cantilevered hinge

Article no.			
Series	Execution	Material	
		Aluminium 6060 T5	
		Silver	Black
6876	.08	.71	-
6876	.09	-	.77

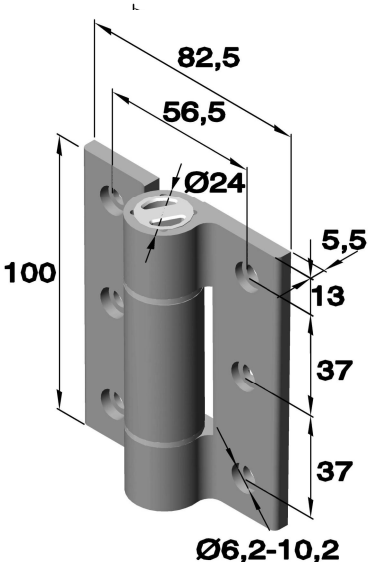

Art.no. 6876 (drilled and countersunk)
with integrated spring

Article no.				Spring force in N.m		
Series	Execution	Material		0°	90°	180°
		Aluminium 6060 T5				
		Silver	Black			
6876	.01	.70.	.77	2,4	3,1	3,8
6876	.02	.70	.77	2,4	3,1	3,8

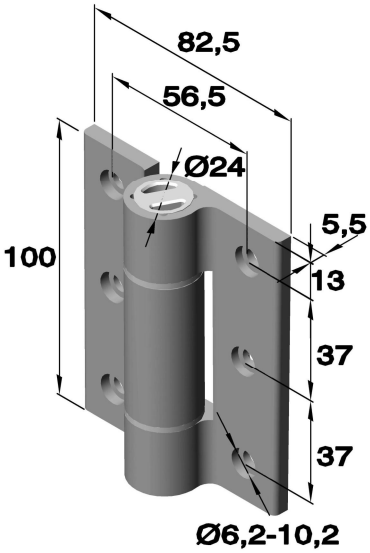

Art.no. 6876 (drilled and countersunk)
Soft-closing torque hinge

Opens and closes steamed.
Function ensures to 115°
Torque per couple: 2,5 to 4,5 N.m

Article no.		
Series	Execution	Material
		Anodized colorless
		Aluminium 6060 T5
6876	.06	.71

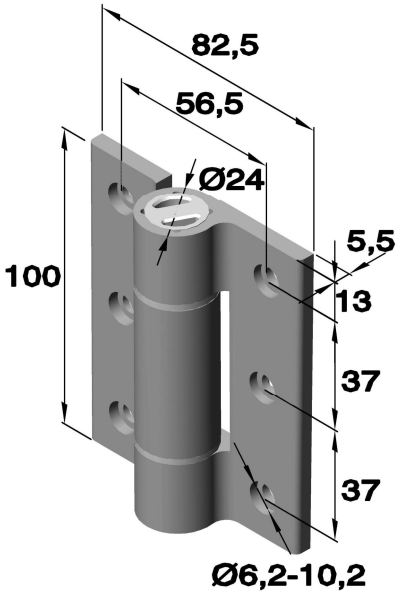

Management System ISO 9001:2015 ISO 14001:2015 TÜVRheinland ZERTIFIZIERT www.tuv.com ID 9108624624

Further materials and surface finishes on demand. We will be pleased to give you advice.
Phone: +49 (0) 231 / 725 790 -0 EMail: info@hokon-verschlusstechnik.de
Fax: +49 (0) 231 / 725 790 -10 Home page: www.hokon-verschlusstechnik.de

Aluminium hinges

Art no.:6960 (perforated and countersunk)

Spring hinge

with integrated spring

Article no.				Spring force in N.m		
Series	Execution	Material				
		Colorless	Black	0°	90°	180°
		Alu 6060 T5	Alu 6060 T5			
6960	.01	.71	.77	0,2	0,12	0,07

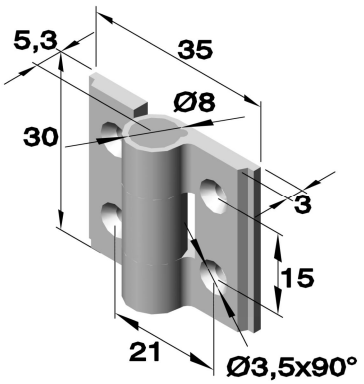

Art no.:6871(perforated and countersunk)

Adjusting screw: internal hex 2,5
Temperature stability: -20 °C to + 80 °C

Max. tensile strength : 2240 N
Max. shear strength: 1050 N

Article no.				
Series	Execution	Material		
		Raw	Colorless	Black
		Alu 6060 T5	Alu 6060 T5	Alu 6060 T5
6871	.01	.70	-	.77
6871	.02	-	.70	-

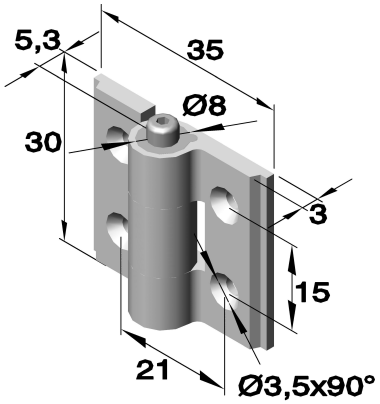

art.no.:6871 (perforated and countersunk)

Detent positions all 30° from 0° to 270°
Detent moment is not adjustable.

Article no.			
Series	Execution	Material	
		Anodized colorless	Anodized black
		Alu 6060 T5	Alu 6060 T5
6871	.06	.71	.77

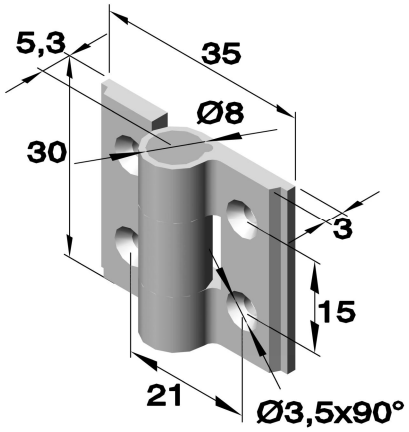

Aluminium hinges

Art no. 158. 5314.__.__ (spring force adjustable)

with integrated spring

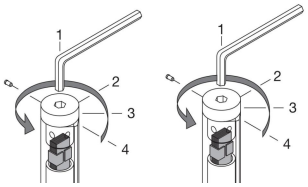

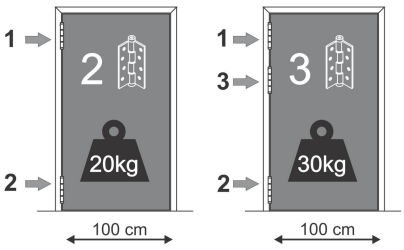

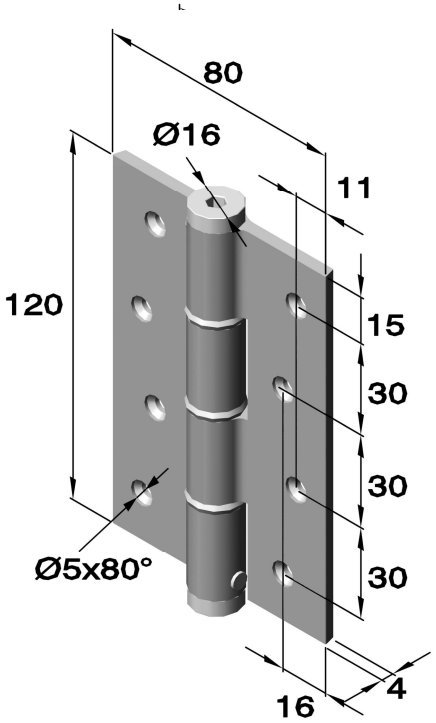

Article no.			Load in kg	
Series	Material		for 2 hinges	for 3 hinges
	Aluminium	Anodized		
158.5314.01	.71	Silver	20	30
158.5314.02	.72	Gold	20	30
158.5314.03	.73	Bronce	20	30
158.5314.06	.76	White	20	30
158.5314.09	.77	Black	20	30

This product will be delivered only in pairs.
Close doors automatically,
Integrated mechanic is very tough and adjustable.
Max. aperture angle 180°.

Art no. 158. 5814.__.__ (spring force adjustable)

with integrated spring

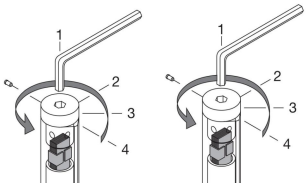

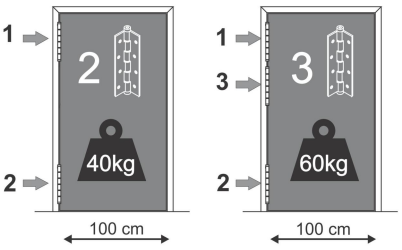

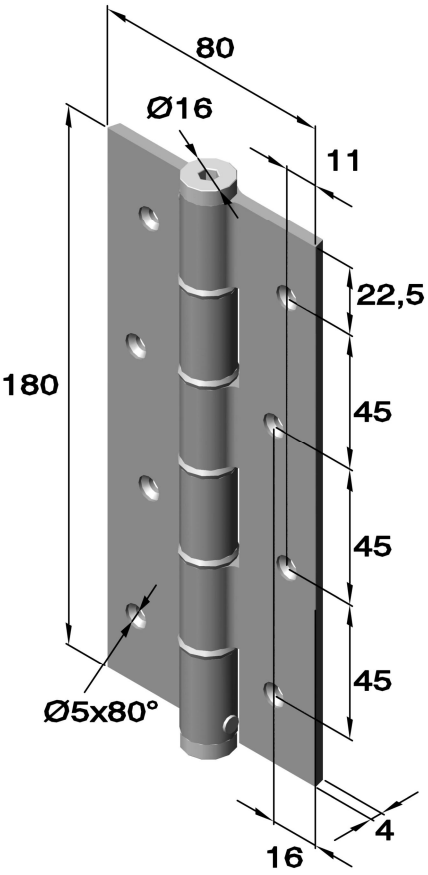

Article no.			Load in kg	
Series	Material		for 2 hinge	for 3 hinge
	Aluminium	Anodized		
158.5814.01	.71	Silver	40	60
158.5814.02	.72	Gold	40	60
158.5814.03	.73	Bronce	40	60
158.5814.06	.76	White	40	60
158.5814.09	.77	Black	40	60

This product will be delivered only in pairs.
Close doors automatically,
Integrated mechanic is very tough and adjustable.
Max. aperture angle 180°.

Management System ISO 9001:2015 ISO 14001:2015 TÜVRheinland ZERTIFIZIERT www.tuv.com ID 9108624624

Further materials and surface finishes on demand. We will be pleased to give you advice.
Phone: +49 (0) 231 / 725 790 -0 EMail: info@hokon-verschlusstechnik.de
Fax: +49 (0) 231 / 725 790 -10 Home page: www.hokon-verschlusstechnik.de

Aluminium hinges

Art no. 158. 5414.__.__ (spring force adjustable)

Double joint hinge/swing door hinge
with integrated spring

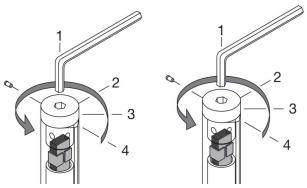

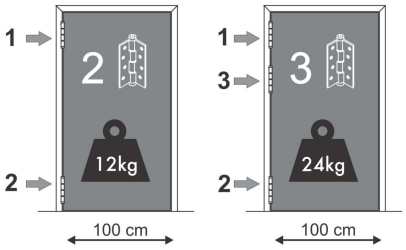

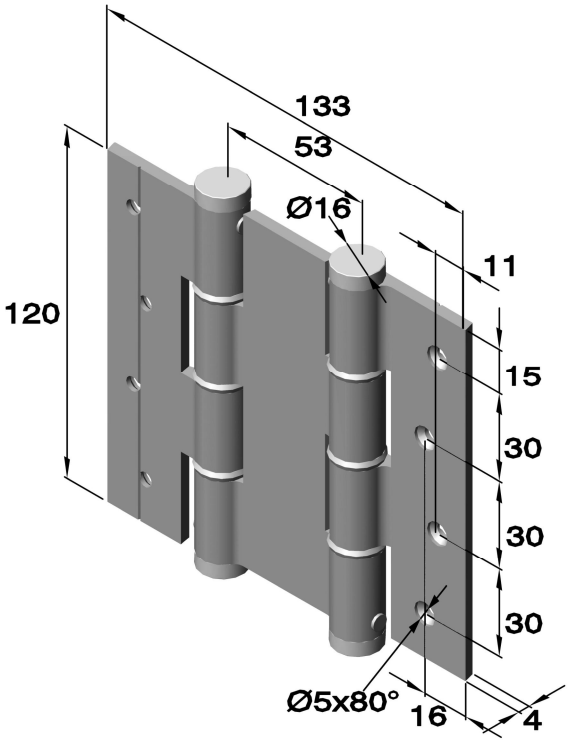

Article no.			Load in kg	
Series	Material		for 2 hinge	for 3 hinge
	Aluminium	Anodized		
158.5414.01	.71	Silver	12	24
158.5414.02	.72	Gold	12	24
158.5414.03	.73	Bronce	12	24
158.5414.06	.76	White	12	24
158.5414.09	.77	Black	12	24

This product will be delivered only in pairs.
Close doors automatically
Integrated mechanic is very tough and adjustable.
Max. aperture angle 180°.

art no. 158. 5914.__.__ (spring force adjustable)

double joint hinge/swing door hinge
with integrated spring

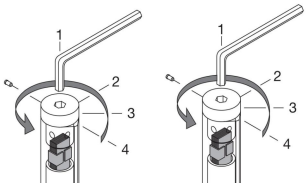

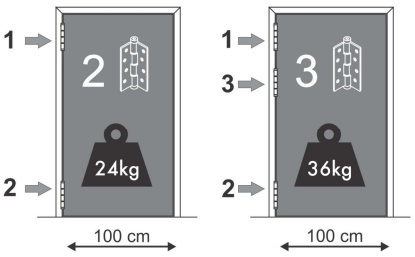

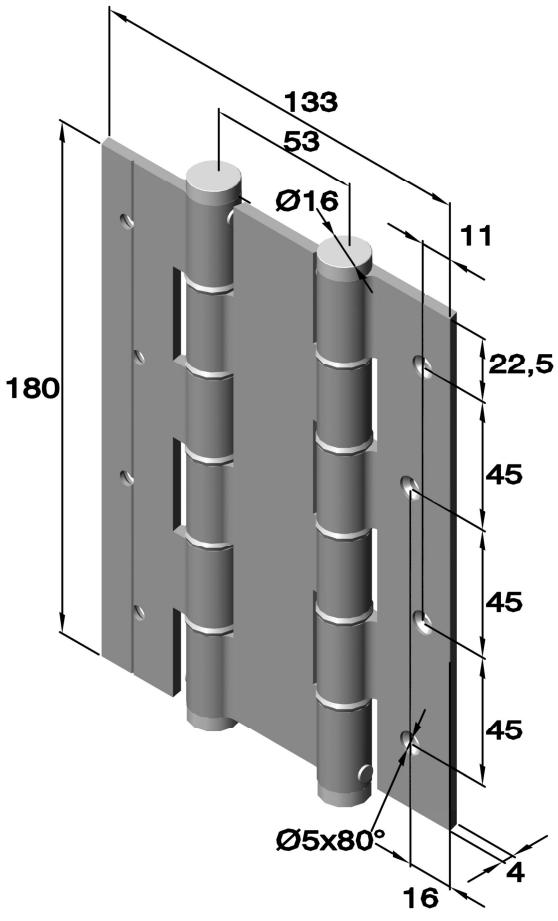

Article no.			Load in kg	
Series	Material		for 2 hinge	for 3 hinge
	Aluminium	Anodized		
158.5914.01	.71	Silver	24	36
158.5914.02	.72	Gold	24	36
158.5914.03	.73	Bronce	24	36
158.5914.06	.76	White	24	36
158.5914.09	.77	Black	24	36

This product will be delivered only in pairs.
Close doors automatically,
Integrated mechanic is very tough and adjustable.
Max. aperture angle 180°.

Aluminium hinges

Art no. 158. 6314.__.__ (spring force adjustable)

with integrated spring

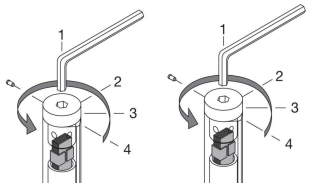

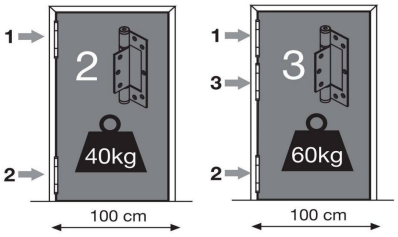

Article no.			Load in kg	
Series	Material		for 2 hinge	for 3 hinge
	Aluminium	Anodized		
158.6314.01	.71	Silver	40	60
158.6314.02	.72	Gold	40	60
158.6314.03	.73	Bronce	40	60
158.6314.06	.76	White	40	60
158.6314.09	.77	Black	40	60

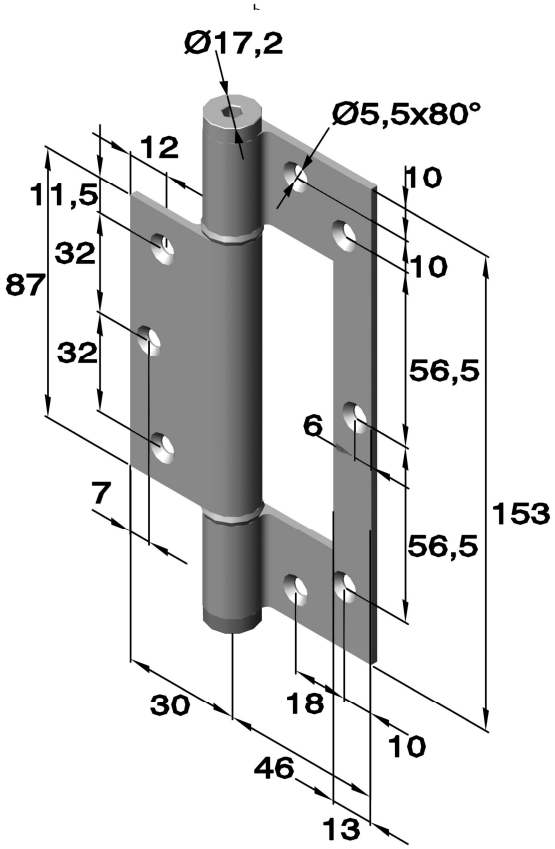

This product will be delivered.
Close doors automatically,
Integrated mechanic is very tough and adjustable.
Max. aperuture angle 180°.

Art no. 158. 6717.__.__ (spring force adjustable)

with integrated spring

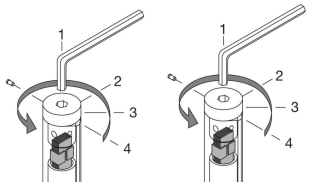

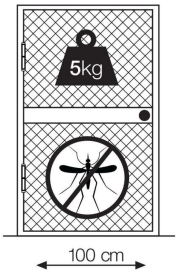

Article no.		
Series	Material	
	Aluminium	Anodized
158.6717.01	.71	Silver
158.6717.02	.72	Gold
158.6717.03	.73	Bronce
158.6717.06	.76	White
158.6717.09	.77	Black

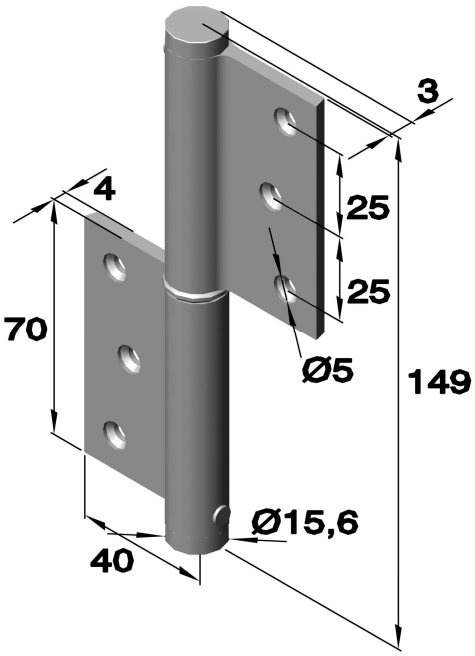

This product will be delivered only in pairs.
Close doors automatically,
Integrated mechanic is very tough adjustable.
Max. aperture angle 180°.

Further materials and surface finishes on demand. We will be pleased to give you advice.
Phone: +49 (0) 231 / 725 790 -0
Fax: +49 (0) 231 / 725 790 -10
EMail: info@hokon-verschlusstechnik.de
Home page: www.hokon-verschlusstechnik.de

Aluminium hinges

Rest hinge in aluminium

Execution
(.01)

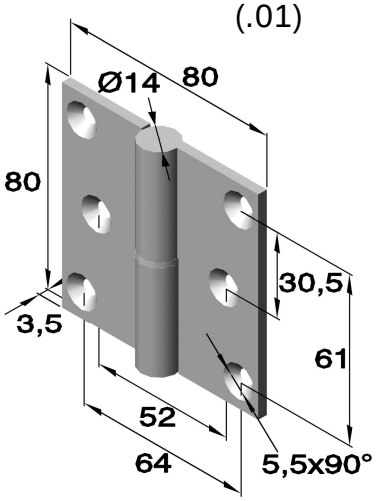

Art.no: 6085 (perforated and countersunk)
with fixed, Zinc plated steel bolt and nylon coating

Pin diameter 8mm.

Article no.			
Series	Execution		Material
			Aluminium
	Left	Right	Anodized
6085	.01	.02	.70

Execution
(.01)

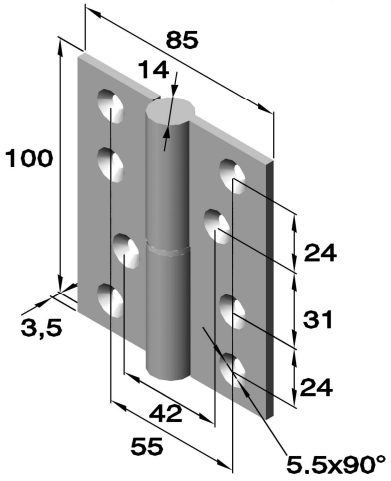

Art.no: 6086 (perforated and countersunk)
with fixed, Zinc plated steel bolt and nylon coating

Pin diameter 8mm.

Article no.			
Series	Execution		Material
			Aluminium
	Left	Right	Anodized
6086	.01	.02	.70

Execution
(.02)

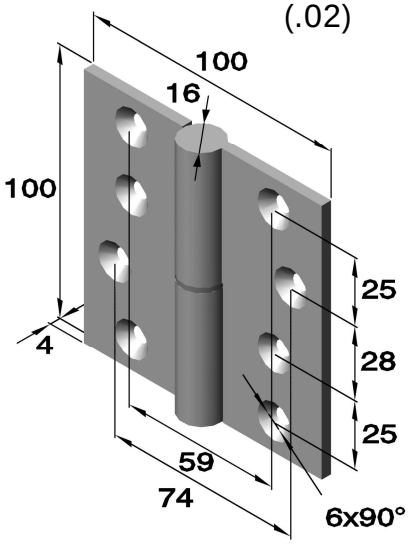

Art.no: 6087 (perforated and countersunk)
with fixed, Zinc plated steel bolt and nylon coating

Pin diameter 9mm.

Article no.			
Series	Execution		Material
			Aluminium
	Left	Right	Anodized
6087	.01	.02	.70

Aluminium hinges

HoKon
VERSCHLUSSTECHNIK &
SONDERKONSTRUKTIONEN

Weld on hinge-rolls „ABR“ with round ends

FVS with fixed stainless steel pin and brass intermediate ring.
AVS with extractable stainless steel pin and brass intermediate ring.

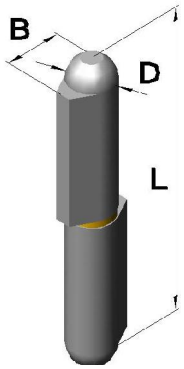

Article no.					Dimensions in mm			
Series	L	Execution		Material Aluminium	D	B	d	Load capacity ca. in kg
ABR	60	FVS	AVS	.70	10	12	6	50
ABR	80	FVS	AVS	.70	13	16	8	70
ABR	100	FVS	-	.70	16	20	10	100
ABR	120	FVS	AVS	.70	16	20	10	120
ABR	150	FVS	-	.70	20	25,5	13	150
ABR	180	FVS	-	.70	20	25,5	13	170

Art.no.:6022

with riveted stainless steel pin; drilling on request

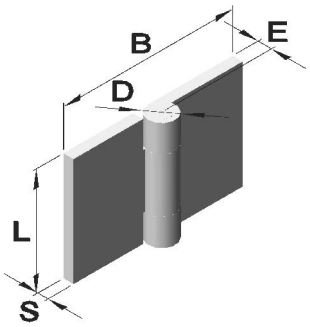

Article no.			Dimension in mm									
Series	Execution	Material Raw Aluminium	L	B	C Ø	D	E	F	f	G	S	Pin Ø
6022	.01	.70	32	50	-	8	4	-	-	-	3	5,2
6022	.02	.70	50	50	-	8	4	-	-	-	3	5,2
6022	.03	.70	32	50	3,2	8	4	30	-	20	3	5,2

Art.no.:6023

with riveted stainless steel pin; drilling on request

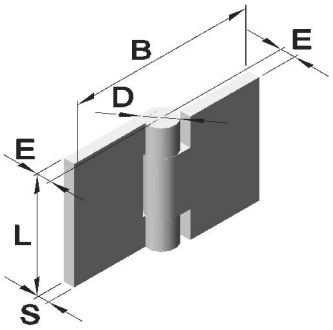

Article no.			Dimension in mm					
Series	Execution	Material Raw Aluminium	L	B	D	E	S	Pin Ø
6023	.01	.70	32	50	8	4	3	5,2
6023	.02	.70	50	50	8	4	3	5,2

TÜVRheinland ZERTIFIZIERT Management System ISO 9001:2015 ISO 14001:2015 www.tuv.com ID 9108624624

Further materials and surface finishes on demand. We will be pleased to give you advice.
Phone: +49 (0) 231 / 725 790 -0 EMail: info@hokon-verschlusstechnik.de
Fax: +49 (0) 231 / 725 790 -10 Home page: www.hokon-verschlusstechnik.de

Cranked hinges








Cranked hinges

Art.no.:6030 (drilled and countersunk)
with strength stainless steel pin

Article no.			Dimensions in mm										
Series	Execution	Material Chrome plated Brass	L	B	b	C Ø	D	E	f1	f2	G	S	Pin Ø
6030	.01	.23	38	18,5	16,5	4	6	16,5	9	7	23	1,5	3

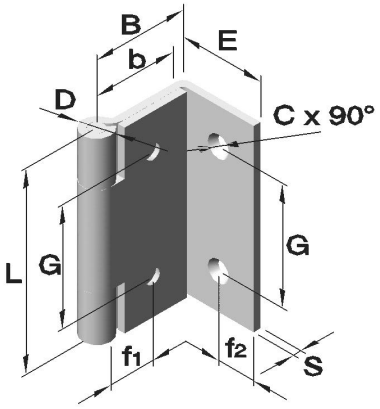

Art.no.:6031 (drilled and countersunk)
with strength stainless steel pin

Article no.			Dimensions in mm									
Series	Execution	Material Chrome plated Brass	L	B	C Ø	D	E	f1	f2	G	S	Pin Ø
6031	.01	.23	38	18,5	4	6	16,5	9	7	23	1,5	3

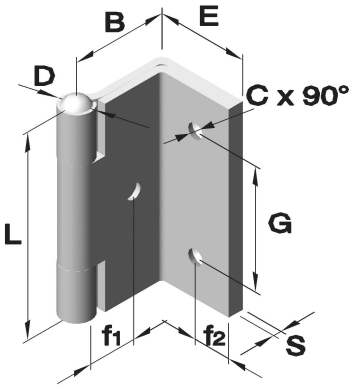

Art.no.:6031 (drilled)
with strength stainless steel pin,

Article no.			Dimensions in mm									
Series	Execution	Material Stainless steel shiny 1.4401	L1	L2	B1	B2	D	E1	E2	G	S	Pin Ø
6031	.02	.35	40	60	21,5	30	6	14,5	3	36	1,5	3

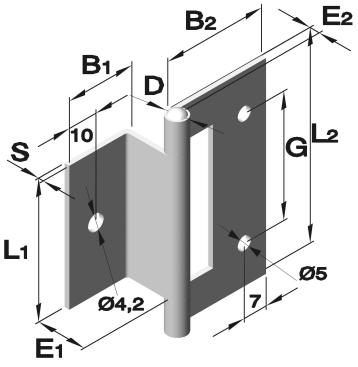

Art.no.:6032 (drilled and countersunk)
with strength stainless steel pin,

Article no.			Dimensions in mm								
Series	Execution	Material Stainless steel polished 1.4016	L	B1	B2	C Ø	D	E1	E2	S	Pin Ø
6032	.01	.30	50	20,3	24,5	4,8	5,4	1,5	2,7	1,2	3

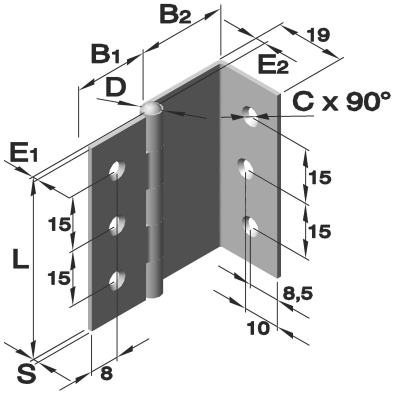

TÜVRheinland ZERTIFIZIERT
Management System ISO 9001:2015 ISO 14001:2015
www.tuv.com ID 9108624624

Further materials and surface finishes on demand. We will be pleased to give you advice.
Phone: +49 (0) 231 / 725 790 -0 eMail: info@hokon-verschlusstechnik.de
Fax: +49 (0) 231 / 725 790 -10 Homepage: www.hokon-verschlusstechnik.de

Cranked hinges

Art.no.:6033 (drilled and countersunk)
with strength stainless steel pin,

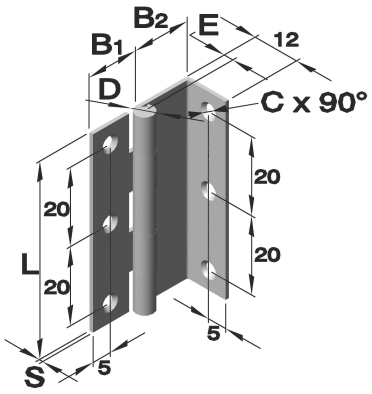

Article no.			Dimensions in mm							
Series	Execution	Material: Stainless steel shiny 1.4016	L	B	B2	C Ø	D	E	S	Pin Ø
6033	.01	.30	50	13,5	15	4	5	2.5	1	3

Art.no.:6034 (drilled and countersunk)
with pull out stainless steel pin,

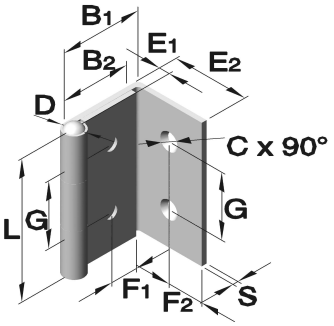

Article no.				Dimensions in mm											
Series	Execution	Material: Chrome plated 1.4016	Material: Burnished 1.4016	L	B1	B2	C Ø	D	E1	E2	F1	F2	G	S	Pin Ø
6034	.01	.03	.07	38	22,5	19	4,7	6	4	21	7,5	10	18	1,5	3
6034	.02	.03	-	38	23	19	4	6	3,5	17	7	8	26	1,5	3
6034	.03	.03	-	38	24,5	19	4,7	6	4	19	7,5	10	18	1,5	3

Art.no.:6035 (drilled and countersunk)
with pull out pin,

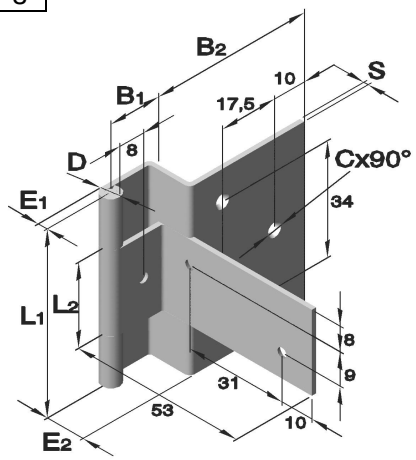

Article no.			Dimensions in mm									
Series	Execution	Material: Chrome plated Steel	L1	L2	B1	B2	C Ø	D	E1	E2	S	Pin Ø
6035	.02	.03	55	25	16,5	37,5	4,75	6	3	12	1,5	3

Art.no.:6036 (drilled and countersunk)
with pull out pin

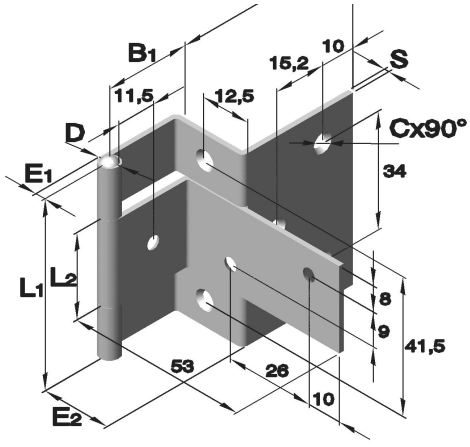

Article no.				Dimensions in mm									
Series	Execution	Material: Chrome plated Steel	Material: Burnished Steel	L1	L2	B1	B2	C Ø	D	E1	E2	S	Pin Ø
6036	.01	.03	.07	55	25	25	35	5,2	6	3	20,5	1,5	3

Cranked hinges

Art.no.:6037 (drilled and countersunk)
with pull out pin

Article no.			
Series	Execution	Material	
		Brassed	Nickel
		Steel	Steel
6037	.01	.02	03

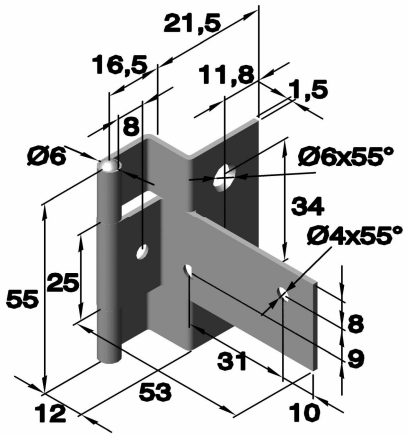

Art.no.:6037 (drilled and countersunk)
with pull out pin;

Article no.			Dimensions in mm								
Series	Execution	Material	L	B	C Ø	D	E	F	G	S	Pin Ø
		Zinc plated									
		Steel									
6037	.03	.04	60	56	5	6	10	38	42	1,5	3

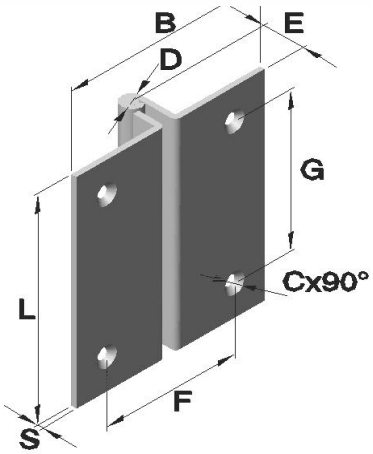

Art.no.:6038 (drilled and countersunk)
with strength stainless steel pin;

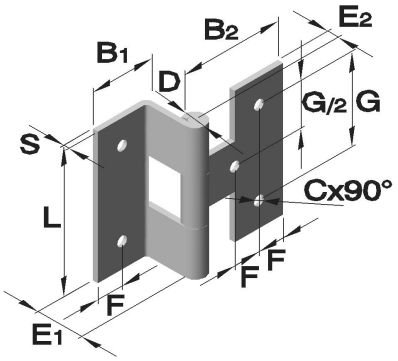

Article no.						Dimensions in mm										
Series	Execution	material				L	B1	B2	C Ø	D	E1	E2	F	G	S	Pin Ø
		Nickel	Chrome plated	Burnished	Stainless steel											
		Steel	Steel	Steel	1.4301											
6038	.01	.01	.03	.07	-	38	17	27	2,8	6	12,5	3	7	24	1,5	3
6038	.02	-	.03	-	-	38	17	27	2,8	6	8,5	3	7	24	1,5	3
6038	.03	-	-	-	.30	38	17	31	2,8	6	16,5	3	7	24	1,5	3

TÜVRheinland ZERTIFIZIERT Management System ISO 9001:2015 ISO 14001:2015 www.tuv.com ID 9108624624

Further materials and surface finishes on demand. We will be pleased to give you advice.
Phone: +49 (0) 231 / 725 790 -0 eMail: info@hokon-verschlusstechnik.de
Fax: +49 (0) 231 / 725 790 -10 Homepage: www.hokon-verschlusstechnik.de

Cranked hinges

Art.no.:6041 (drilled and countersunk)
with pull out pin

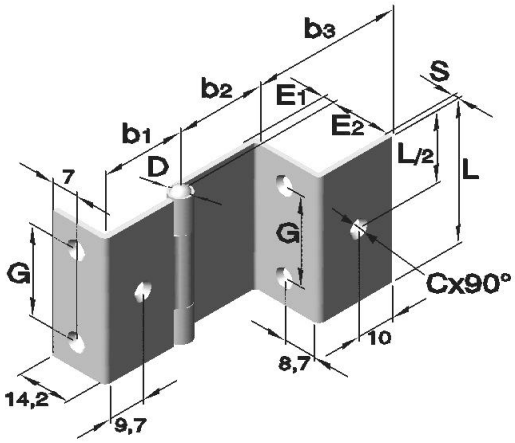

Article no.				Dimensions in mm										
Series	Execution	Material		L	b1	b2	b3	C Ø	D	E1	E2	G	S	Pin Ø
		Chrome plated	Burnished											
		Steel	Steel											
6041	.01	.03	.07	38	22,5	24	22	5,5	6	3	16	24	1,5	3

Art.no. : 6042 (drilled and countersunk)
with pull out pin

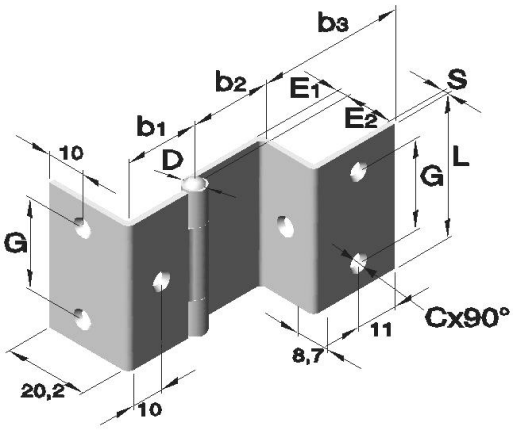

Article no.			Dimensions in mm										
Series	Execution	Material	L	b1	b2	b3	C Ø	D	E1	E2	G	S	Pin Ø
		Chrome plated											
		Steel											
6042	.01	.03	38	20	21,5	24,5	5,5	6	3	13	24	1,5	3

Cranked hinges

TÜVRheinland ZERTIFIZIERT
Management System
ISO 9001:2015
ISO 14001:2015
www.tuv.com
ID 9108624624

Further materials and surface finishes on demand. We will be pleased to give you advice.
Phone: +49 (0) 231 / 725 790 -0 eMail: info@hokon-verschlusstechnik.de
Fax: +49 (0) 231 / 725 790 -10 Homepage: www.hokon-verschlusstechnik.de

HoKon
VERSCHLUSSTECHNIK &
SONDERKONSTRUKTIONEN

Stainless steel hinges





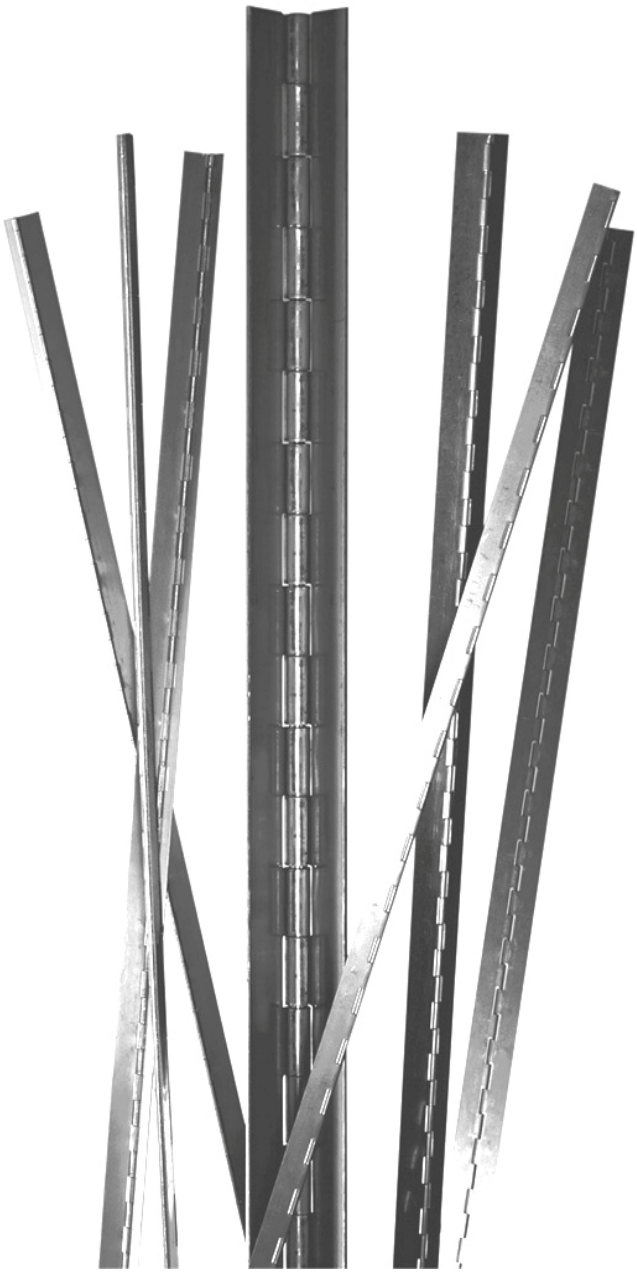





HoKon
VERSCHLUSSTECHNIK &
SONDERKONSTRUKTIONEN

Stainless steel hinges







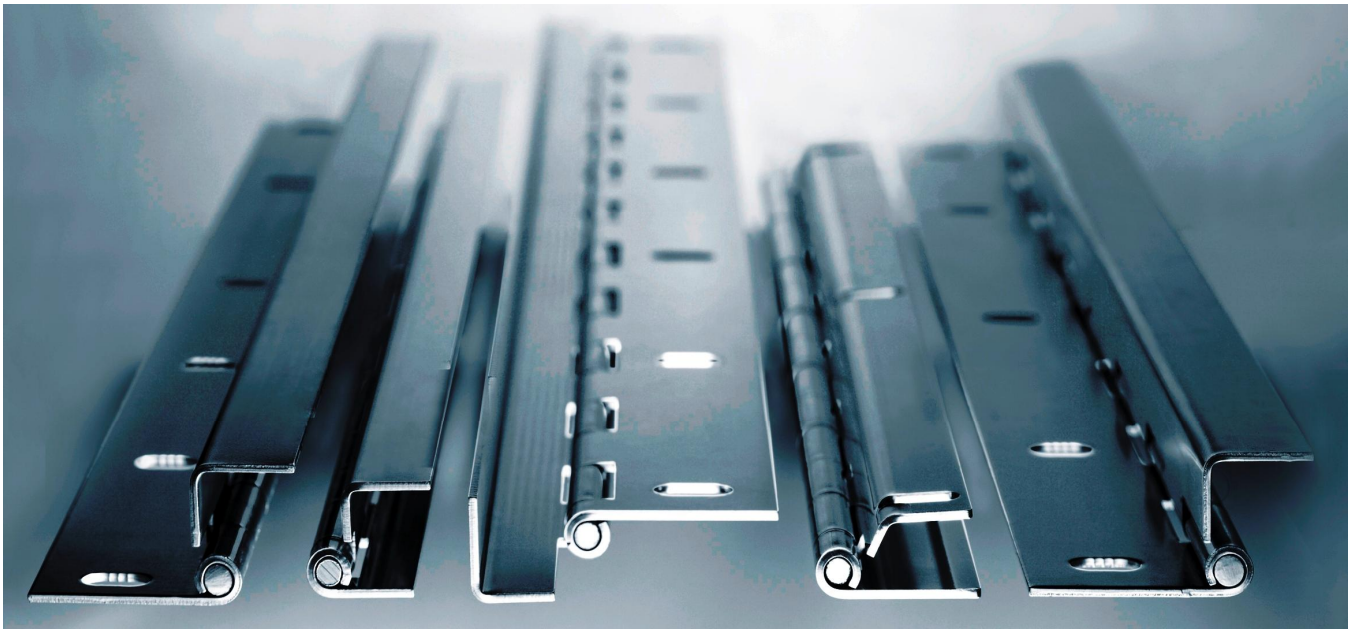

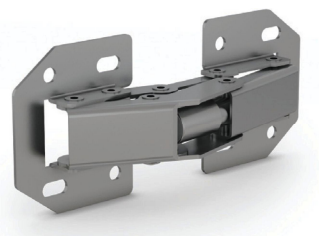

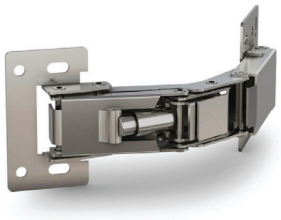



Management System
ISO 9001:2015
ISO 14001:2015
TÜVRheinland ZERTIFIZIERT
www.tuv.com ID 9108624624

Further material and surface finishes on demand. We will be pleased to give you advice.
Phone: +49 (0) 231 / 725 790 -0 eMail: info@hokon-verschlusstechnik.de
Fax: +49 (0) 231 / 725 790 -10 Homepage: www.hokon-verschlusstechnik.de

Piano hinges
Stainless steel

Width: 20mm

Art.no.	Material		Dimensions in mm							
	Rod	Pin	A	B	C	D Pin Ø	E	F	G	Ø S
6712.30	Stainless steel	Stainless steel	2040	20	0,8	2	15	11,2	60	2,8
6718.30	Stainless steel	Stainless steel	2040	20	0,8	2	15	-	-	-

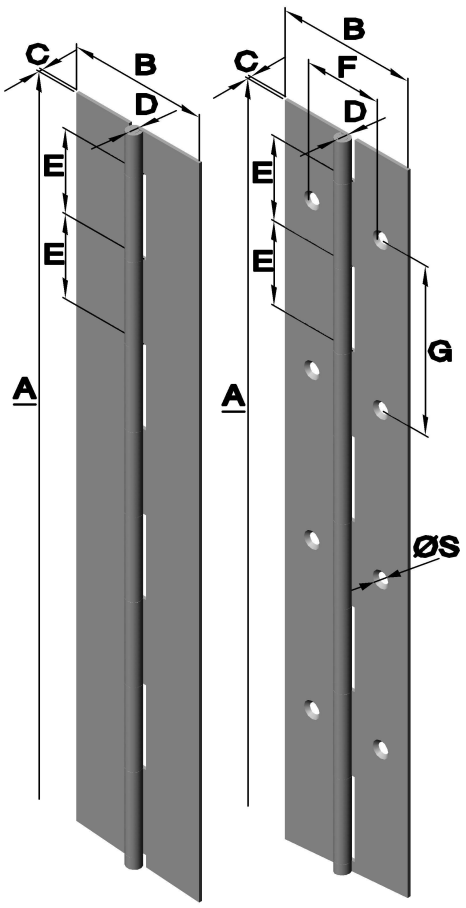

Width: 25mm

Art.no.	Material		Dimensions in mm							
	Rod	Pin	A	B	C	D Pin Ø	E	F	G	Ø S
6719.30	Stainless steel	Stainless steel	1800	25	1	2	15	-	-	-
6728.30	Stainless steel	Stainless steel	2040	25	0,8	2	15	-	-	-
6729.30	Stainless steel	Stainless steel	2040	25	1	2	15	-	-	-
6730.30	Stainless steel	Stainless steel	2040	25	0,8	2	15	14,2	60	3,6

Width: 30mm

Art.no.	Material		Dimensions in mm							
	Rod	Pin	A	B	C	D PinØ	E	F	G	Ø S
6736.30	Stainless steel	Stainless steel	2040	30	0,8	2	15	-	-	-
6738.30	Stainless steel	Stainless steel	2040	30	1	2	15	16,8	60	3,9
6740.30	Stainless steel	Stainless steel	1800	30	1	2	15	-	-	-
6742.30	Stainless steel	Stainless steel	2040	30	1	2	15	-	-	-
6743.30	Stainless steel seawater resistant	Stainless steel	2040	30	1	2	15	-	-	-
6745.30	Stainless steel	Stainless steel	2000	30	1,5	4	30	-	-	-
6746.30	Stainless steel	Stainless steel	2000	30	2	6	25	-	-	-

Width: 32mm

Art.no.	Material		Dimensions in mm				
	Rod	Pin	A	B	C	D Pin Ø	E
6749.30	Stainless steel	Stainless steel	1800	32	1,2	3	30
6750.30	Stainless steel	Stainless steel	1950	32	1,5	3	12,5

Hinges can be tailored to your specifications on request.
Drilled execution on request.

Piano hinges
Stainless steel

Width: 40mm

Art.no.	Material		Dimensions in mm							
	Rod	Pin	A	B	C	D Pin Ø	E	F	G	Ø S
6759.30	Stainless steel	Stainless steel	1800	40	1,2	3	30	-	-	-
6760.35	Stainless steel	Stainless steel	2040	40	1,2	3	30	22,7	60	4,2
6764.30	Stainless steel	Stainless steel	2040	40	0,8	2	15	-	-	-
6771.30	Stainless steel	Stainless steel	2040	40	1,2	3	30	-	-	-
6774.30	Stainless steel	Stainless steel	2040	40	1,5	4	15	-	-	-
6775.30	Stainless steel seawater restistant	Stainless steel	2040	40	1,5	4	15	-	-	-
6779.30	Stainless steel	Stainless steel	2040	40	1,5	4	15	22,7	60	4
6756.30	Stainless steel	Stainless steel	1950	40	1,5	3	12,5	-	-	-

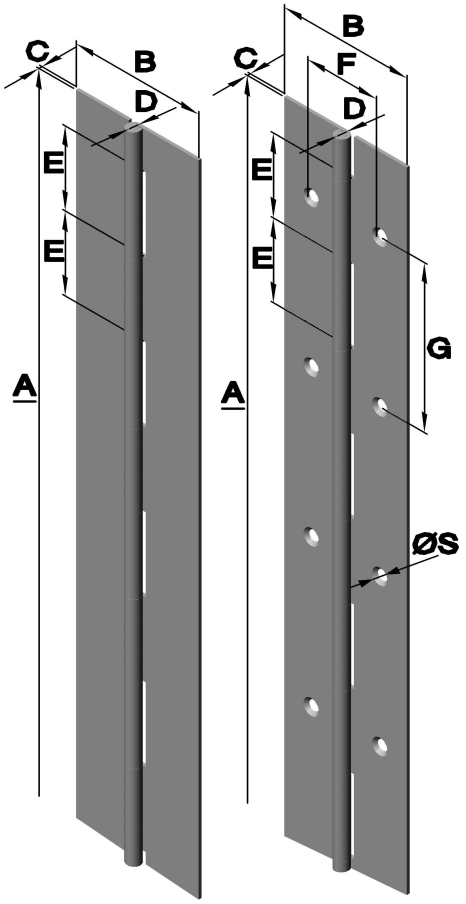

Width: 44mm

Art.no.	Material		Dimensions in mm				
	Rod	Pin	A	B	C	D Pin Ø	E
6777.30	Stainless steel	Stainless steel	2040	44	2	6	30

Width: 50mm

Art.no.	Material		Dimensions in mm							
	Rod	Pin	A	B	C	D Pin Ø	E	F	G	Ø S
6785.30	Stainless steel	Stainless steel	2040	50	1,2	3	30	-	-	-
6787.30	Stainless steel	Stainless steel	2000	50	2	4	25	-	-	-
6791.30	Stainless steel	Stainless steel	1800	50	1,2	3	30	-	-	-
6792.30	Stainless steel	Stainless steel	2040	50	1,2	3	30	28	60	4
6793.30	Stainless steel	Stainless steel	1800	50	1,5	4	15	-	-	-
6794.30	Stainless steel seawater resistant	Stainless steel	2040	50	1,2	3	30	-	-	-
6798.30	Stainless steel	Stainless steel	1950	50	1,5	3	12,5	-	-	-

Width: 57mm

Art.no.	Material		Dimensions in mm				
	Rod	Pin	A	B	C	D Pin Ø	E
6796.30	Stainless steel	Stainless steel	2160	57	1,5	4	15

Hinges can be tailored to your specifications on request.
Drilled execution on request.

TÜVRheinland ZERTIFIZIERT
Management System ISO 9001:2015 ISO 14001:2015
www.tuv.com ID 9108624624

Further material and surface finishes on demand. We will be pleased to give you advice.
Phone: +49 (0) 231 / 725 790 -0 eMail: info@hokon-verschlusstechnik.de
Fax: +49 (0) 231 / 725 790 -10 Homepage: www.hokon-verschlusstechnik.de

Piano hinges
Stainless steel

Width: 60mm

Art.no.	Material		Dimensions in mm							
	Rod	Pin	A	B	C	D Pin Ø	E	F	G	Ø S
6804.30	Stainless steel	Stainless steel	2040	60	2	6	30	-	-	-
6805.30	Stainless steel seawater resistant	Stainless steel	2040	60	2	6	30	-	-	-
6807.30	Stainless steel	Stainless steel	2040	60	2	6	30	35	60	4

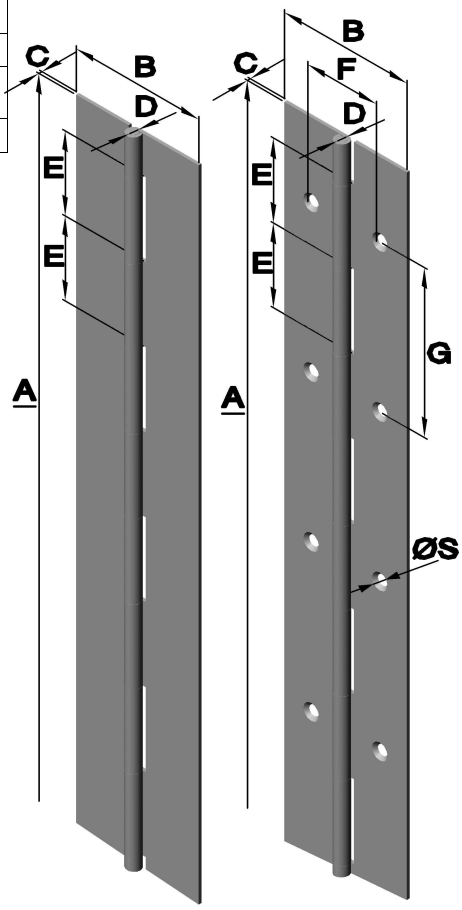

Width: 63mm

Art.no.	Material		Dimensions in mm				
	Rod	Pin	A	B	C	D Pin Ø	E
6808.30	Stainless steel	Stainless steel	1800	63	1,5	4	15

Width: 70mm

Art.no.	Material		Dimensions in mm				
	Rod	Pin	A	B	C	D Pin Ø	E
6810.30	Stainless steel	Stainless steel	1800	70	1,5	4	15
6812.30	Stainless steel	Stainless steel	2040	70	2	6	30

Width: 76mm

Art.no.	Material		Dimensions in mm				
	Rod	Pin	A	B	C	D Pin Ø	E
6818.30	Stainless steel	Stainless steel	2160	76	1,5	4	15

Width: 80mm

Art.no.	Material		Dimensions in mm				
	Rod	Pin	A	B	C	D Pin Ø	E
6814.30	Stainless steel	Stainless steel	1000	80	3	6	40
6816.30	Stainless steel	Stainless steel	2000	80	3	6	40
6819.30	Stainless steel	Stainless steel	1950	80	1,5	3	12,5

Hinges can be tailored to your specifications on request.
Drilled execution on request.

Piano hinges
Stainless steel

Width: 100mm

Art.no.	Material		Dimensions in mm				
	Rod	Pin	A	B	C	D Pin Ø	E
6830.30	Stainless steel **on request**	Stainless steel	2000	100	3	10	40
6838.30	Stainless steel	Stainless steel	2000	100	3	6	40

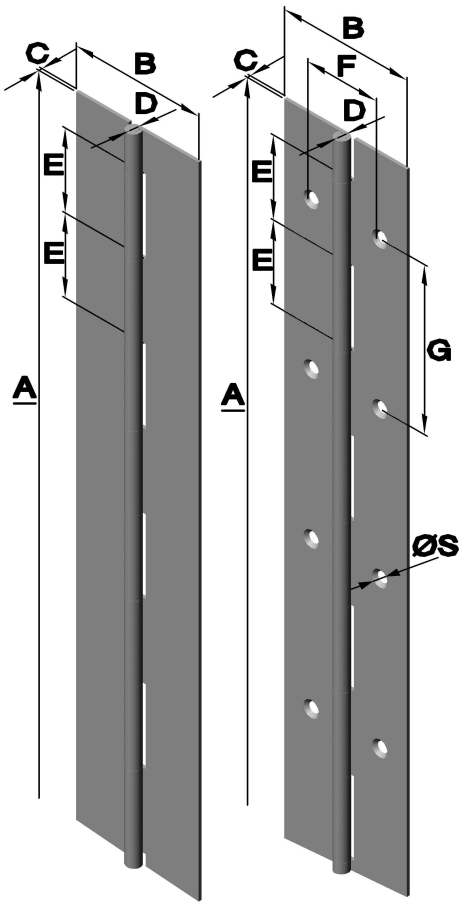

Width: 120mm

Art.no.	Material		Dimensions in mm				
	Rod	Pin	A	B	C	D Pin Ø	E
6831.30	Stainless steel	Stainless steel	2100	120	2	6	30

Piano hinges, rolled, cranked

1 Wing cranked

Art.no.	Material		Dimensions in mm								
	Rod	Pin	A	B	C	D Pin Ø	E	F	G	H	Ø S
6835.30	Stainless steel	Stainless steel	2000	31,5	1	2	30	7,5	60	20	3,5

Hinges can be tailored to your specifications.
Drilled execution on request.

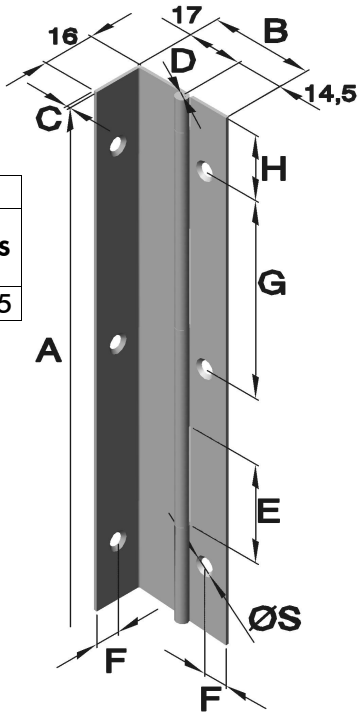

TÜVRheinland ZERTIFIZIERT
Management System ISO 9001:2015 ISO 14001:2015
www.tuv.com ID 9108624624

Further material and surface finishes on demand. We will be pleased to give you advice.
Phone: +49 (0) 231 / 725 790 -0 eMail: info@hokon-verschlusstechnik.de
Fax: +49 (0) 231 / 725 790 -10 Homepage: www.hokon-verschlusstechnik.de

Piano hinges
Stainless steel

1 Wing cranked

Art.no.	Material		Dimensions in mm				
	Rod	Pin	A	B	C	D Pin Ø	E
6837.30	Stainless steel	Stainless steel	2000	44	1,5	3	25
6839.30	Stainless steel	Stainless steel	1600	44	1,5	3	25

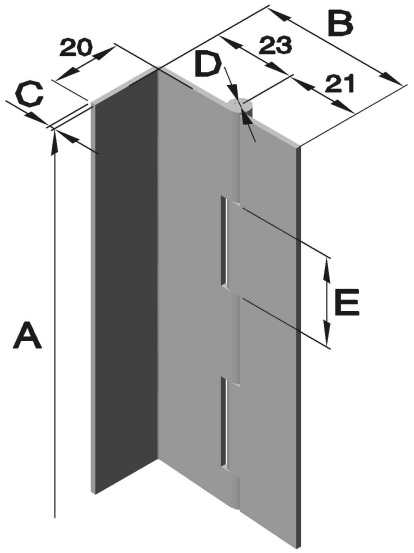

2 Wings cranked

Art.no.	Material		Dimensions in mm				
	Rod	Pin	A	B	C	D Pin Ø	E
6846.30	Stainless steel	Stainless steel	2000	46	1,5	3	25

Hinges can be tailored to your specifications on request.
Drilled execution on request.

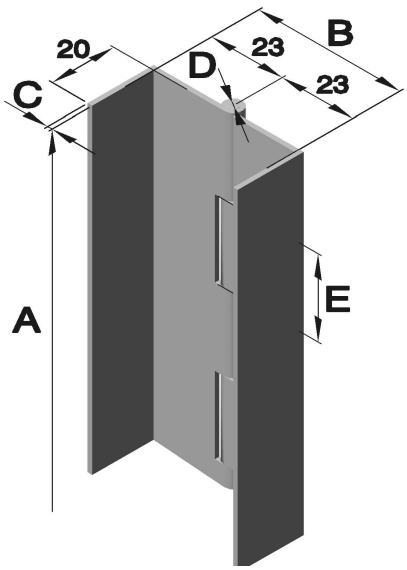

Hinges
Stainless steel

Art.no.:6002
with riveted pin

Article no				Dimensions in mm					
Series	Execution	Material		A	B	D	E	S	Pin Ø
		Stainless steel 1.4301	Stainless steel 1.4401						
6002	.01	.30	.35	40	40	8	4	2	4
6002	.02	.30	.35	50	50	10	5	2	6
6002	.03	.30	.35	60	60	10	5	2	6
6002	.04	.30	-	70	70	10	5	2	6
6002	.05	.30	-	80	80	11	5,5	2,5	6
6002	.06	.30	-	100	100	11	5,5	2,5	6

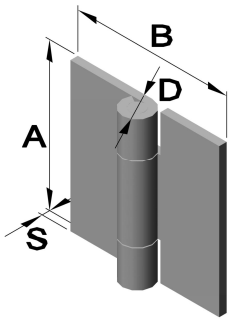

Art.no.:6002 (drilled and countersunk)
with riveted pin

Article no				Dimensions in mm								
Series	Execution	Material		A	B	C Ø	D	F	G	S	Pin Ø
		Stainless steel 1.4301	Stainless steel 1.4401								
6002	.07	.30	.35	40	40	4	8	24	24	2	4
6002	.08	.30	.35	50	50	4,5	10	34	34	2	6
6002	.09	.30	.35	60	60	4,5	10	44	40	2	6

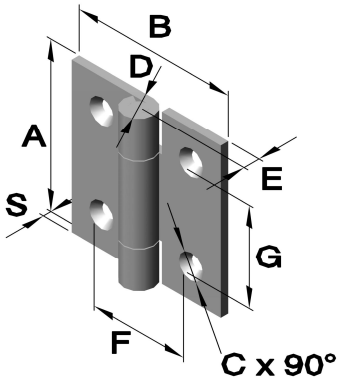

Art.no.:6002 (drilled and countersunk)
with riveted pin

Article no			Dimensions in mm								
Series	Execution	Material	A	B	C Ø	D	F	f	G	S	Pin Ø
		Stainless steel 1.4301									
6002	.10	.30	70	70	4,5	10	54	34	50	2	6
6002	.11	.30	80	80	4,5	11	64	39	60	2,5	6

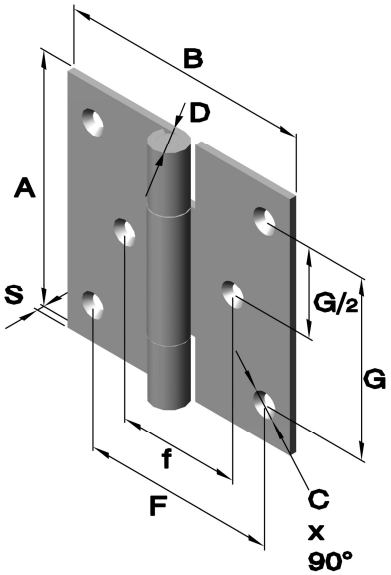

TÜVRheinland ZERTIFIZIERT
Management System ISO 9001:2015 ISO 14001:2015
www.tuv.com ID 9108624624

Further material and surface finishes on demand. We will be pleased to give you advice.
Phone: +49 (0) 231 / 725 790 -0 eMail: info@hokon-verschlusstechnik.de
Fax: +49 (0) 231 / 725 790 -10 Homepage: www.hokon-verschlusstechnik.de

Hinges
Stainless steel

Art.no.:99.100
with fixed pin in stainless steel

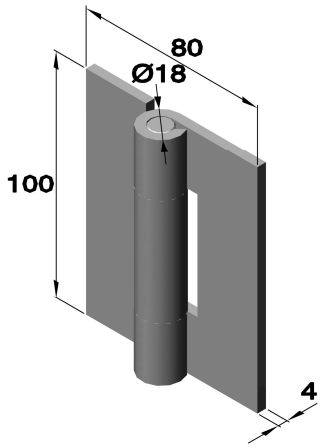

Article no.	
Series	Material Stainless steel 1.4301
99.10080	.30

Art.no.:99.100
with fixed pin in stainless steel

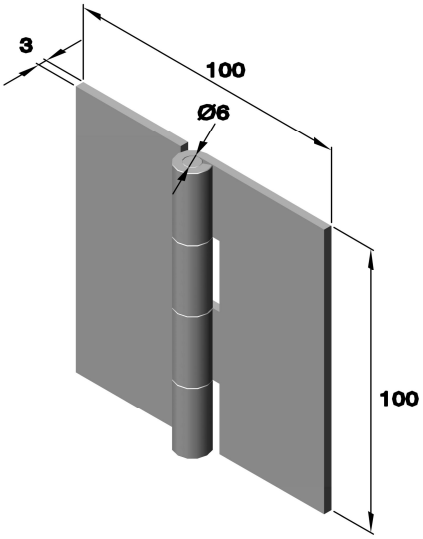

Article no.		
Series	Execution	Material Stainless steel 1.4301
99.	1001003	.30

Art.no.:6003 (drilled and countersunk)
with pull-out pin

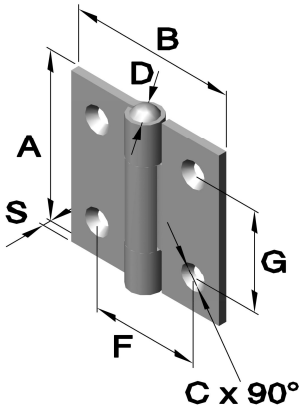

Article no.			Dimensions in mm							
Series	Execution	Material Stainless steel 1.4301	A	B	C Ø	D	F	G	S	Pin Ø
6003	.01	.30	40	40	4	8	26	24	2	4
6003	.02	.30	50	50	4,5	10	34	34	2	6
6003	.03	.30	60	60	4,5	10	44	40	2	6

Hinges
Stainless steel

Art.no.:6004 (drilled and countersunk)
with pull-out pin,

Article no.			Dimensions in mm								
Series	Execution	Material: Stainless steel 1.4301	A	B	C Ø	D	F	f	G	S	Pin Ø
6004	.01	.30	70	70	4	10	54	34	50	2	6
6004	.02	.30	80	80	4,5	11	64	39	60	2,5	6

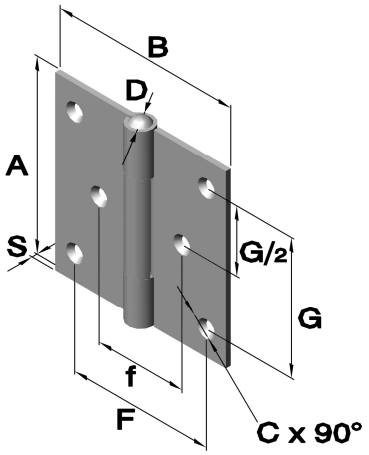

Art.no.:6005 (drilled and countersunk)
with riveted pin

Article no.				Dimensions in mm							
Series	Execution	Material: Stainless steel 1.4301	Material: Stainless steel 1.4401	A	B	C Ø	D	F	G	S	Pin Ø
6005	.01	.30	.35	40	40	4	8	24	24	2	4
6005	.02	.30	.35	50	50	4,5	10	34	34	2	6
6005	.03	.30	.35	60	60	4,5	10	44	40	2	6

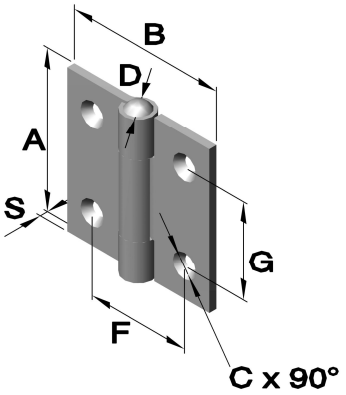

Art.no.:6006 (drilled and countersunk)
with riveted pin

Article no.			Dimensions in mm								
Series	Execution	Material: Stainless steel 1.4301	A	B	C Ø	D	F	f	G	S	Pin Ø
6006	.01	.30	70	70	4,5	10	54	34	50	2	6
6006	.02	.30	80	80	4,5	11	64	39	60	2,5	6

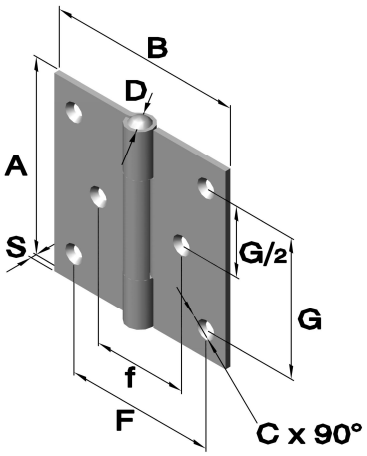

TÜVRheinland ZERTIFIZIERT
Management System ISO 9001:2015 ISO 14001:2015
www.tuv.com ID 9108624624

Further material and surface finishes on demand. We will be pleased to give you advice.
Phone: +49 (0) 231 / 725 790 -0
Fax: +49 (0) 231 / 725 790 -10
eMail: info@hokon-verschlusstechnik.de
Homepage: www.hokon-verschlusstechnik.de

Hinges
Stainless steel

Art.no.:6007 (drilled and countersunk)
with fixed pin

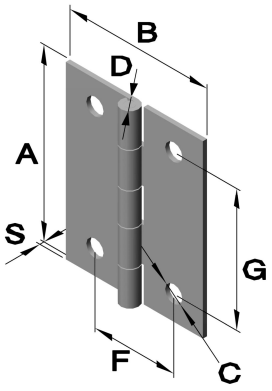

Article no.			Dimensions in mm							
Series	Execution	Material Stainless steel 1.4301	A	B	C Ø	D	F	G	S	Pin Ø
6007	**.01**-perforated	**.30**	50	40	5	3,1	23	36	1,2	2,7
6007	**.02**-countersunk	**.30**	50	40	5	3,1	23	36	1,2	2,7
6007	**.03**-countersunk	**.30**	60	35	4	2	19,5	40	1	1
6007	**.04**-countersunk	**.30**	60	35	4	2	19,5	40	1	1

Art.no.:6009 (drilled and countersunk)
with fixed pin and nylon intermediate ring

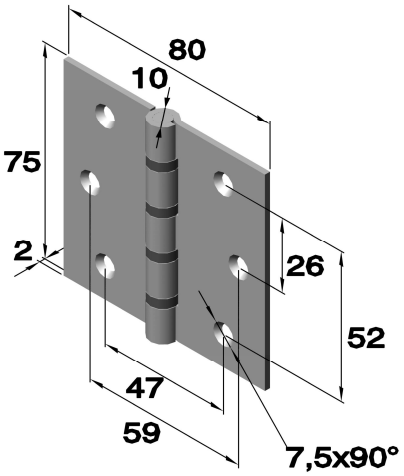

Article no.		
Series	Execution	Material Stainless steel 1.4301
6009	**.01**	**.30**

Art.no.:6010 (drilled and countersunk)
with fixed pin

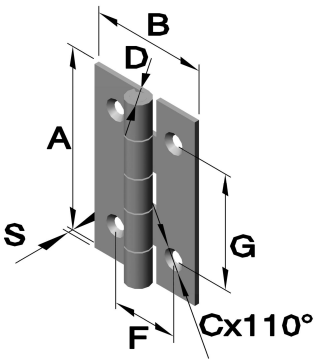

Article no.		Dimensions in mm							
Series	Material Stainless steel 1.4301	A	B	C Ø	D	F	G	S	Pin Ø
6010	**.30**	50	30	3,5	5	17	35	1	3

Hinges
Stainless steel

Art.no.:6024
with pull-out brass pin

Execution **.02** with **90°stop**

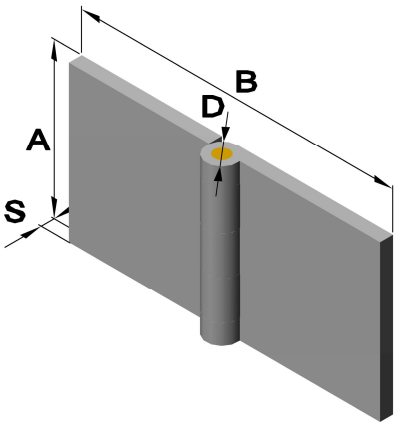

Article no.			Dimensions in mm				
Series	Execution	Material Stainless steel 1.4301	A	B	D	S	Pin Ø
6024	**.01**	**.30**	60	120	12	5	6
6024	**.02 (90°)**	**.30**	60	120	12	5	6

Art.no.:6047
with fixed pin

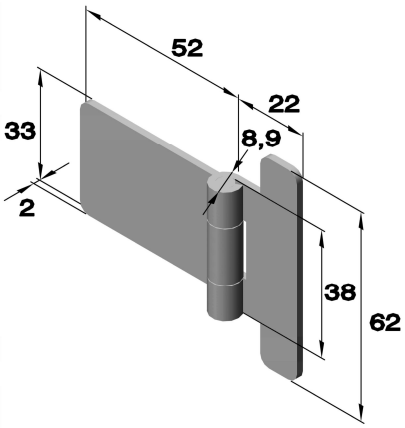

Article no.		
Series	Execution	Material Stainless steel 1.4301
6047	**.01**	**.30**

Art.no.:6048
with fixed pin

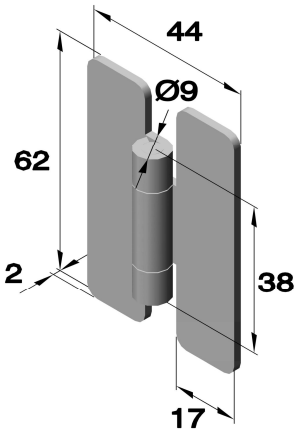

Article no.		
Series	Execution	Material Stainless steel 1.4301
6048	**.01**	**.30**

TÜVRheinland ZERTIFIZIERT
Management System ISO 9001:2015 ISO 14001:2015
www.tuv.com ID 9108624624

Further material and surface finishes on demand. We will be pleased to give you advice.
Phone: +49 (0) 231 / 725 790 -0
Fax: +49 (0) 231 / 725 790 -10
eMail: info@hokon-verschlusstechnik.de
Homepage: www.hokon-verschlusstechnik.de

Hinges
Stainless steel

Art.no.:6050
with pull-out pin and nylon intermediate ring

Article no.		
Series	Execution	Material Stainless steel 1.4301
6050	.01	.30

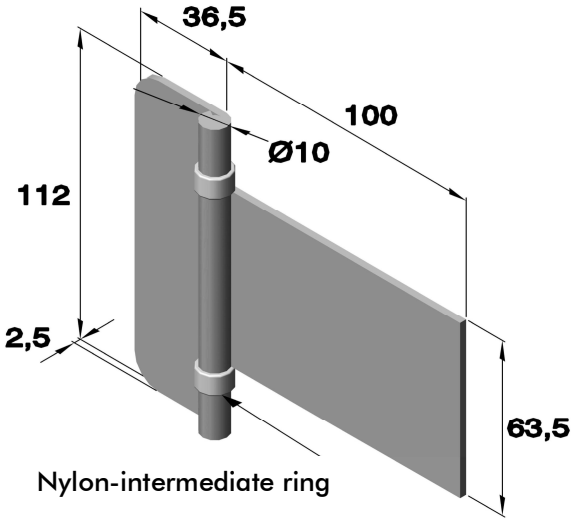

Nylon-intermediate ring

Art.no.:6050 (perforated)
with pull-out pin and nylon intermediate ring

Article no.		
Series	Execution	Material Stainless steel 1.4301
6050	.02	.30

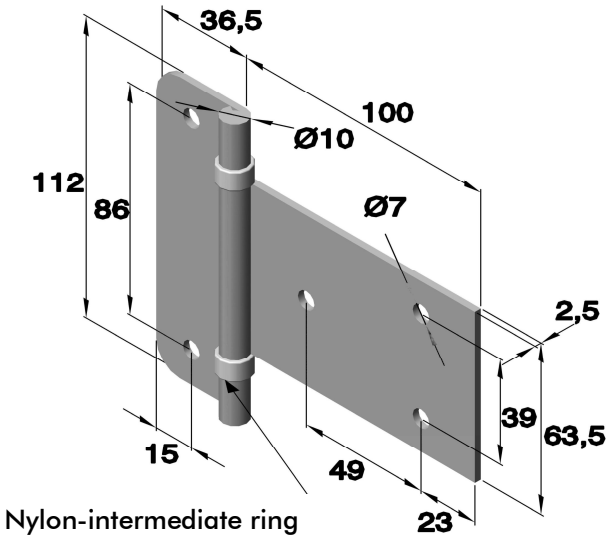

Nylon-intermediate ring

Art.Nr.:6052 (drilled and countersunk)
with fixed pin
Stop at 60°
Suitable for installation of glass doors.

Article no.		
Series	Execution	Material Stainless steel polished 1.4301
6052	.01	.33

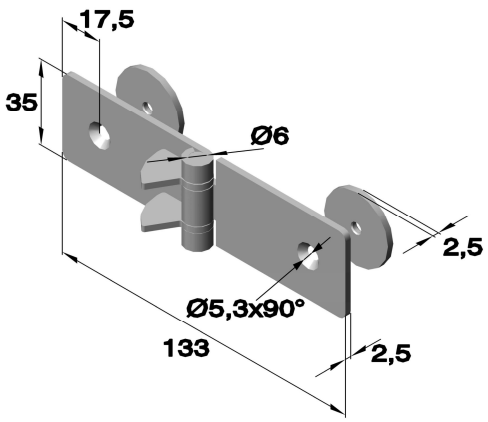

Hinges
Stainless steel

Art.no.:6054
with riveted pin

Article no.		
Series	Execution	Material
		Stainless steel polished
		1.4301
6054	.01	.33

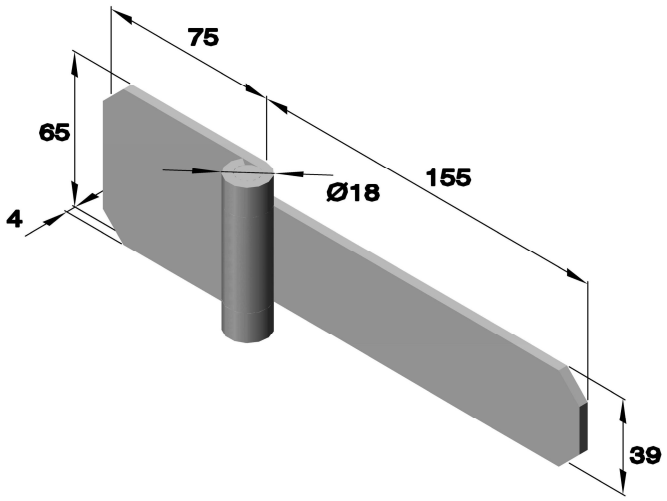

Art.no.:6054 (drilled)
with riveted pin

Article no.		
Series	Execution	Material
		Stainless steel polished
		1.4301
6054	.02	.33

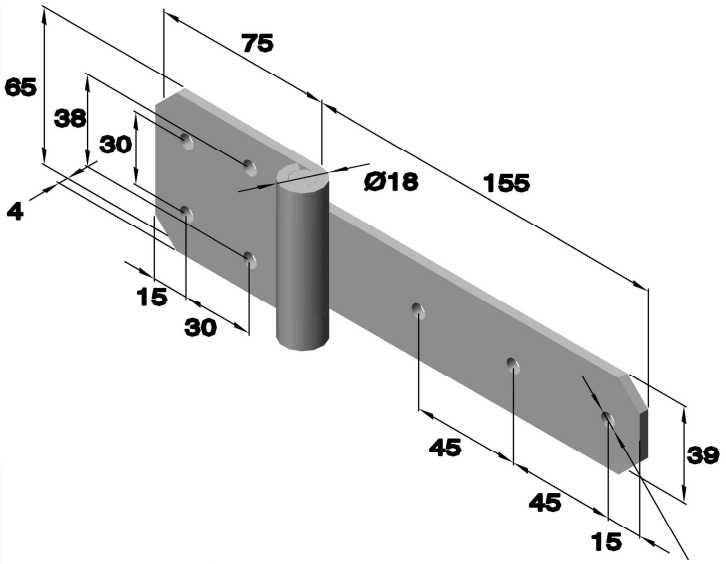

Art.no.:6106 (drilled)
with pull-out pin

Article no.	
Series	Material
	Stainless steel polished
	1.4301
6106	.30

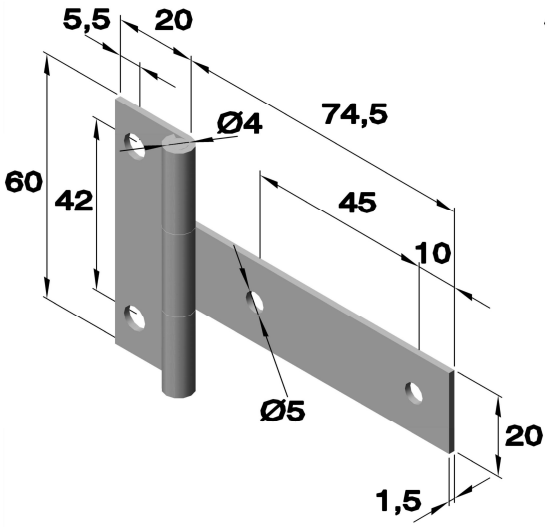

TÜVRheinland ZERTIFIZIERT
Management System ISO 9001:2015 ISO 14001:2015
www.tuv.com ID 9108624624

Further material and surface finishes on demand. We will be pleased to give you advice.
Phone: +49 (0) 231 / 725 790 -0 eMail: info@hokon-verschlusstechnik.de
Fax: +49 (0) 231 / 725 790 -10 Homepage: www.hokon-verschlusstechnik.de

Hinges
Stainless steel

Art.no.:6109 (drilled and countersunk)
with riveted pin

Article no.		Dimensions in mm
Series	Material Stainless steel 1.4301	Pin Ø
6109	.30	3

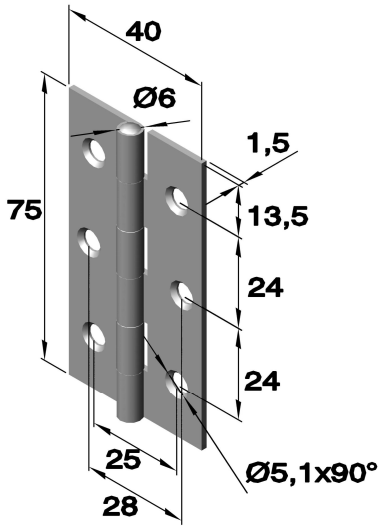

Art.no.:6158 (drilled)
Pin (10mm)
with riveted stainless steel pin

Stainless steel(1.4301) on request.

Article no.		
Series	Execution	Material Stainless steel polished 1.4301
6158	.02	.33

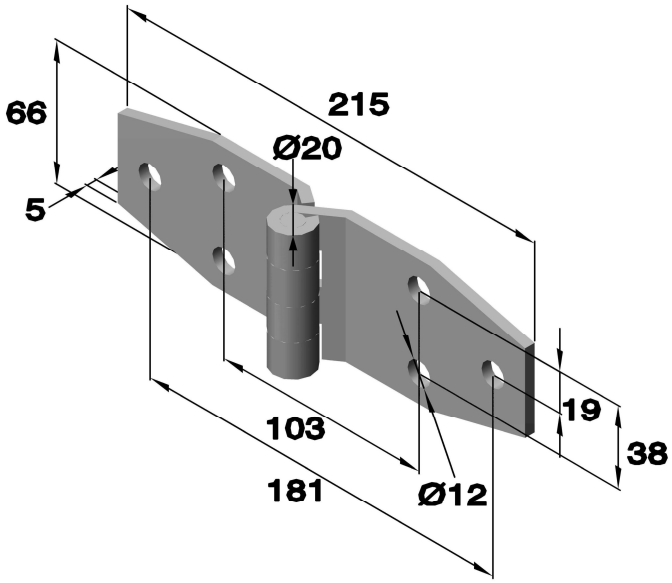

Art.no.:6158 (drilled)

Pin (10mm)
with riveted stainless steel pin

Stainless steel (1.4301) on request

Article no.		
Series	Execution	Material Stainless steel polished 1.4301
6158	.01	.33

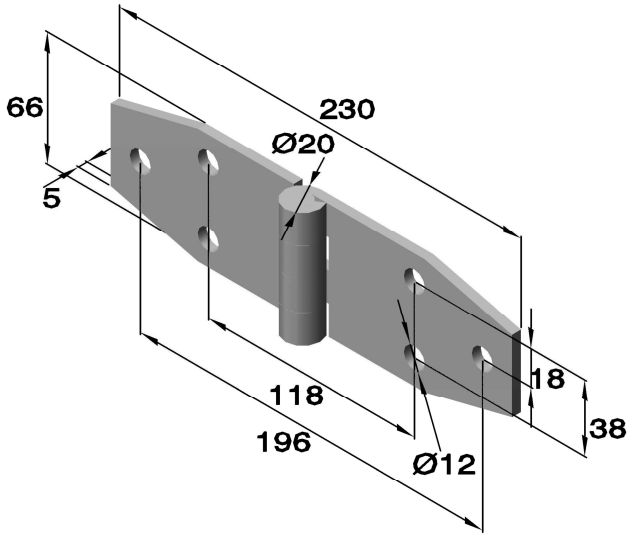

Profile hinge
Stainless steel

Art.no.:6059 Profile steel hinge
with riveted pin

Article no.			Dimensions in mm					
Series	Execution	Material Stainless steel 1.4301	A	B	D	E	S	Pin Ø
6059	.03	.30	50	50	8	4	3	4
6059	.06	.30	50	80	12	6	5	6

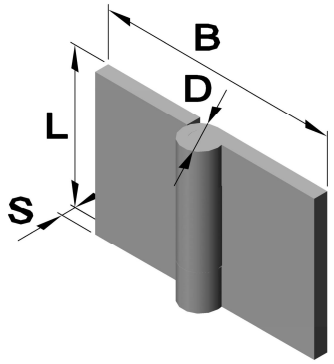

Art.no.:6060 Profile steel hinge
with riveted pin

Article no.			Dimensions in mm					
Series	Execution	Material Stainless steel 1.4301	A	B	D	E	S	Pin Ø
6060	.03	.30	50	50	8	4	3	4
6060	.04	.30	50	80	8	4	3	4

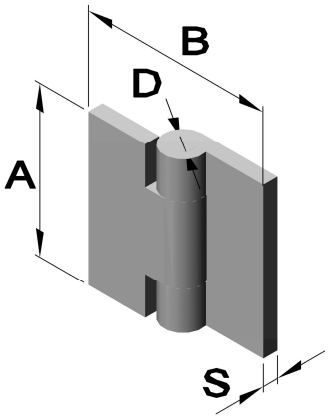

Art.no.:6061 Profile steel hinge
with riveted pin

Article no.			Dimensions in mm					
Series	Execution	Material Stainless steel 1.4301	A	B	D	E	S	Pin Ø
6061	.01	.30	80	80	12	6	5	6

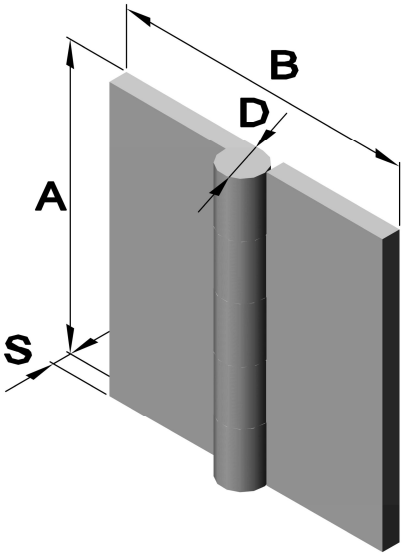

TÜVRheinland ZERTIFIZIERT
Management System ISO 9001:2015 ISO 14001:2015
www.tuv.com ID 9108624624

Further material and surface finishes on demand. We will be pleased to give you advice.
Phone: +49 (0) 231 / 725 790 -0 eMail: info@hokon-verschlusstechnik.de
Fax: +49 (0) 231 / 725 790 -10 Homepage: www.hokon-verschlusstechnik.de

Hinges
in seawater resistant stainless steel

Art.no.:6176 (drilled and countersunk)
with riveted pin

Article no.		
Series	Execution	Material
		Stainless steel polished
		1.4401
6176	.01	.33

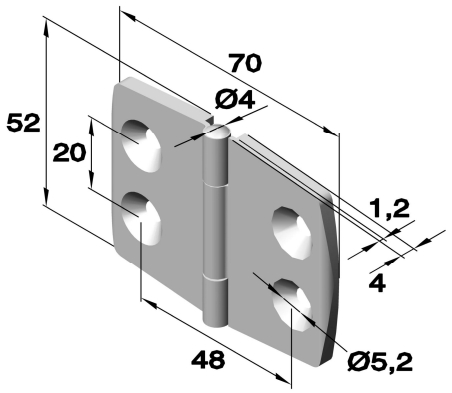

Art.no.:6177 (drilled and countersunk)
with riveted pin

Article no.		
Series	Execution	Material
		Stainless steel polished
		1.4401
6177	.01	.33

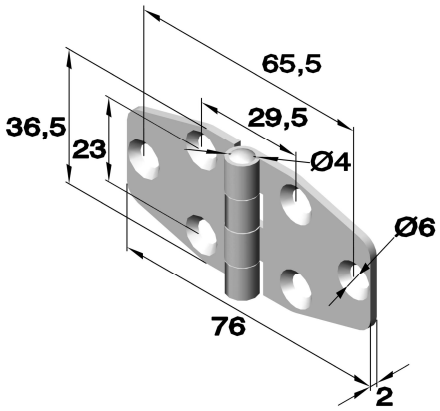

Art.no.:6058 **Stop hinge with locking at 105°**
with fixed pin (**Ø5**)

Article no.		
Series	Execution	Material
		Stainless steel
		1.4301
6058	.04	.30

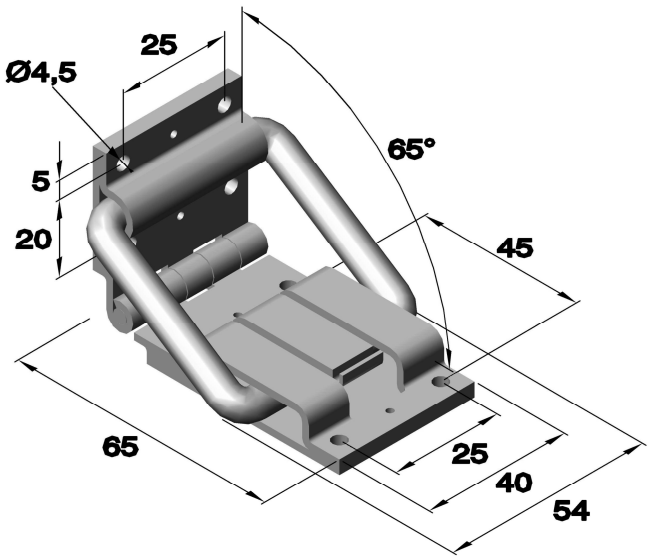

Hinges
in seawater resistant stainless steel

Art.no.:6178 (perforated and countersunk)
with riveted pin

Article no.		
Series	Execution	Material Stainless steel polished 1.4401
6178	.01	.33

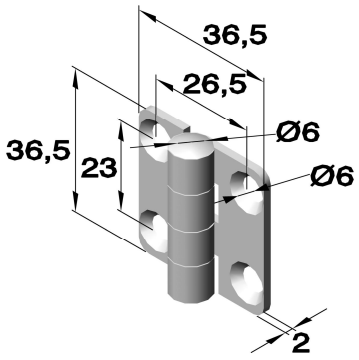

Art.Nr.:6179 (perforated and countersunk)
with riveted pin

Article no.		
Series	Execution	Material Stainless steel polished 1.4401
6179	.01	.33

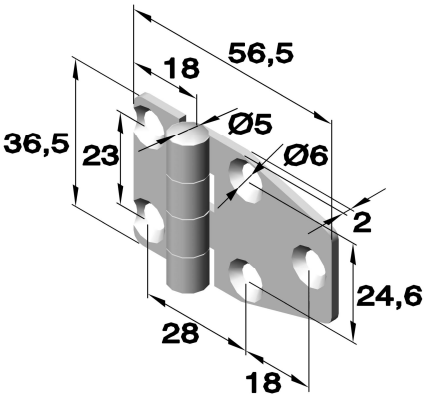

Art.no.:6180 (perforated and countersunk)
with riveted pin

Article no.			Dimensions in mm
Series	Execution	Material Stainless steel polished 1.4401	E
6180	.01	.33	10
6180	.02	.33	15,9
6180	.03	.33	19,2

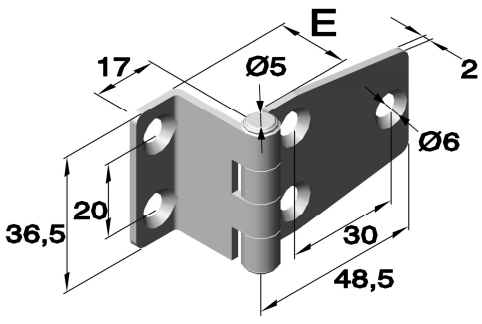

TÜVRheinland ZERTIFIZIERT
Management System
ISO 9001:2015
ISO 14001:2015
www.tuv.com ID 9108624624

Further material and surface finishes on demand. We will be pleased to give you advice.
Phone: +49 (0) 231 / 725 790 -0
Fax: +49 (0) 231 / 725 790 -10
eMail: info@hokon-verschlusstechnik.de
Homepage: www.hokon-verschlusstechnik.de

Hinges
in seawater resistant stainless steel

Art.no.:6181 (perforated and countersunk)

Article no.	
Series	Material
	Stainless steel polished
	1.4401
6181	.33

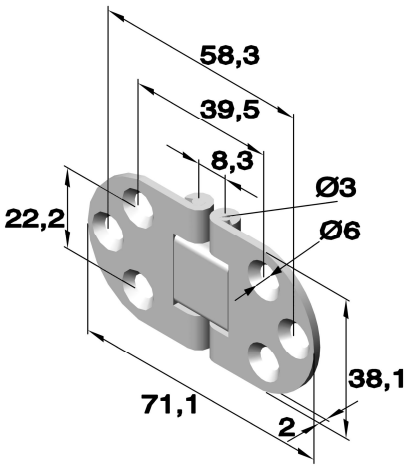

Art.no.:6182 (perforated and countersunk)
with riveted pin

Article no.	
Series	Material
	Stainless steel polished
	1.4401
6182	.33

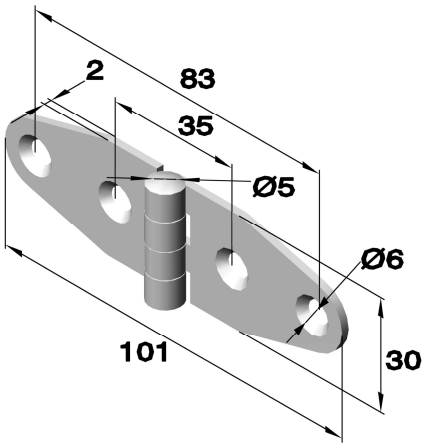

Art.no.:6183 (perforated and countersunk)
with riveted pin

Article no.		
Series	Execution	Material
		Stainless steel polished
		1.4401
6183	.01	.33

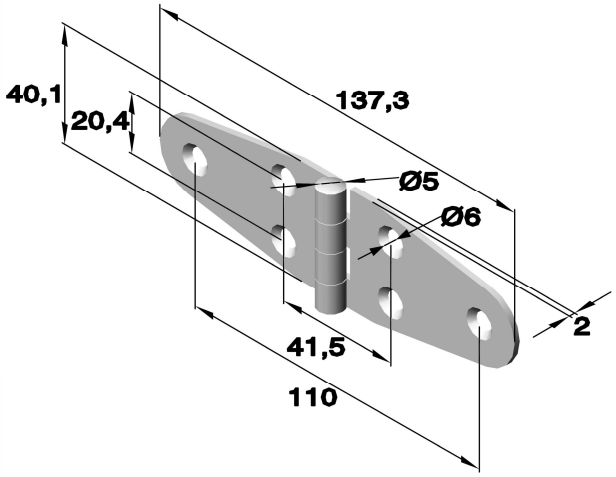

Hinges
in seawater resistant stainless steel

Art.no.:6184 (perforated and countersunk)
with riveted pin

Article no.		
Series	Execution	Material
		Stainless steel polished
		1.4401
6184	.01	.33

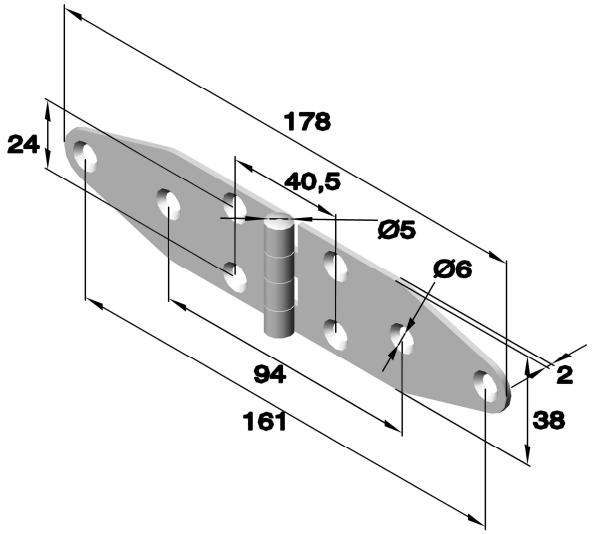

Art.no.:6185 (perforated and countersunk)
with riveted pin

Article no.		
Series	Execution	Material
		Stainless steel polished
		1.4401
6185	.01	.33

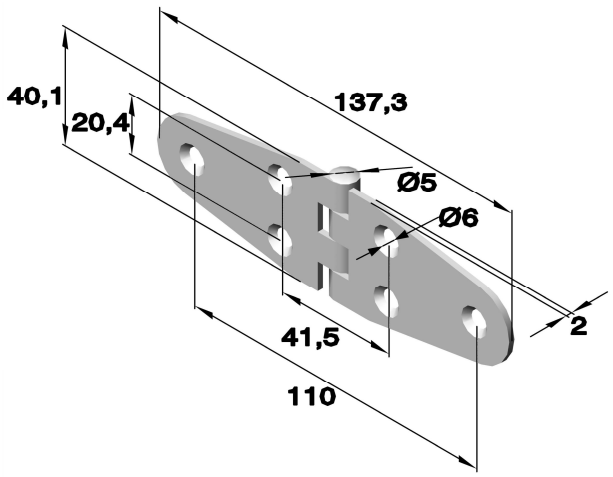

Art.no.:6186 (perforated and countersunk)
with riveted pin

Article no.		
Series	Execution	Material
		Stainless steel polished
		1.4401
6186	.01	.33

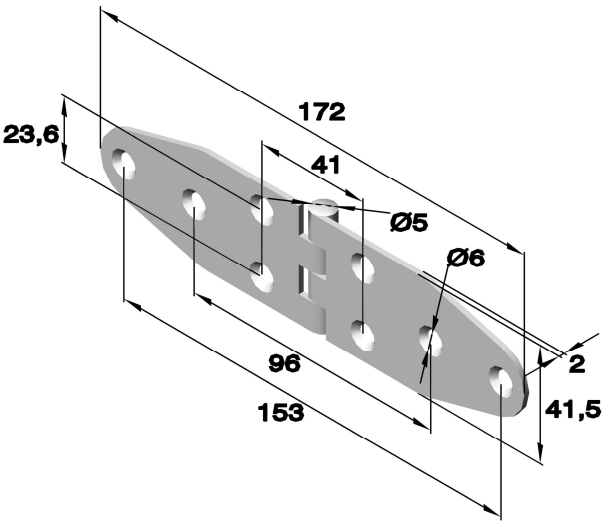

TÜVRheinland ZERTIFIZIERT
Management System ISO 9001:2015 ISO 14001:2015
www.tuv.com ID 9108624624

Further material and surface finishes on demand. We will be pleased to give you advice.
Phone: +49 (0) 231 / 725 790 -0
Fax: +49 (0) 231 / 725 790 -10
eMail: info@hokon-verschlusstechnik.de
Homepage: www.hokon-verschlusstechnik.de

Module hinge
Stainless steel

Hinge combination-example

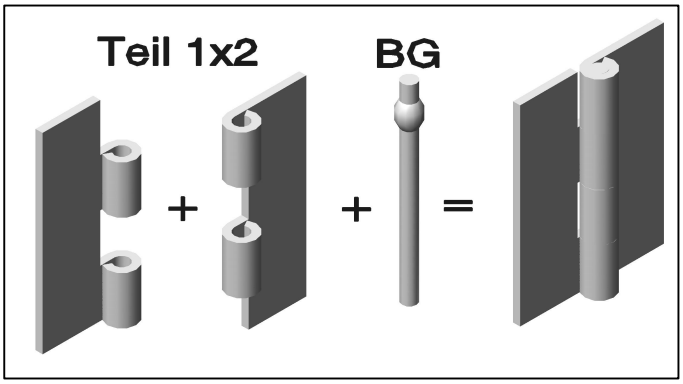

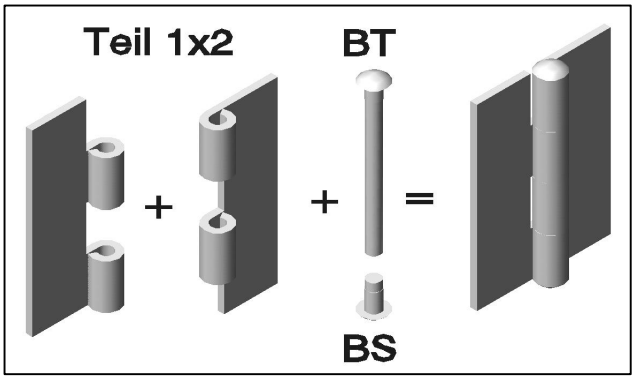

Fitschen combination-example

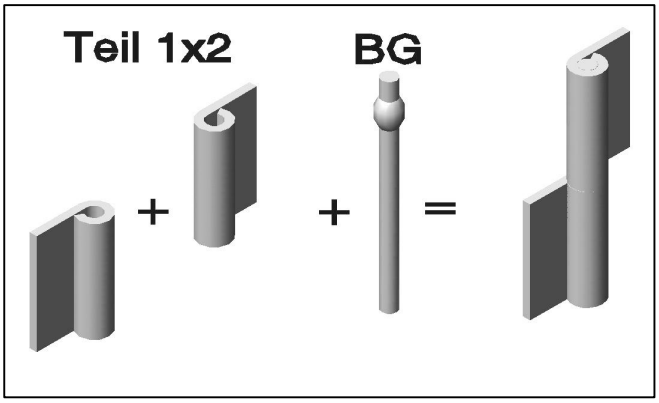

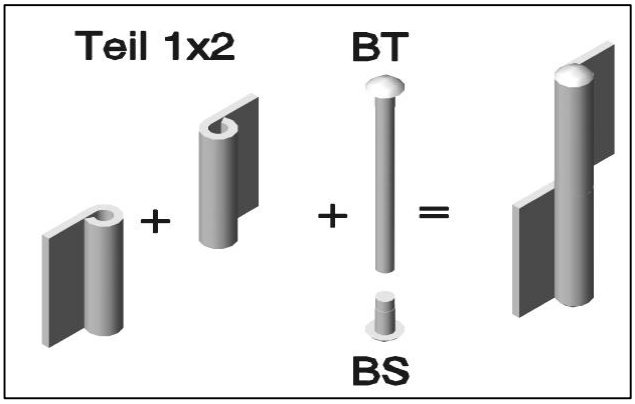

BG compressed pin
BT Pin with collar
BS Plug

Drilling and assembling on request.

Module hinges
Stainless steel

Hinge Module 3mm

Article no.		Dimensions in mm				
Art.	Material Stainless steel 1.4301	L	B	S	Pin Ø	D
6111	**.30**	80	30	3	6	12
6113	**.30**	80	40	3	6	12
6115	**.30**	80	50	3	6	12
6117	**.30**	80	60	3	6	12
6119	**.30**	80	80	3	6	12

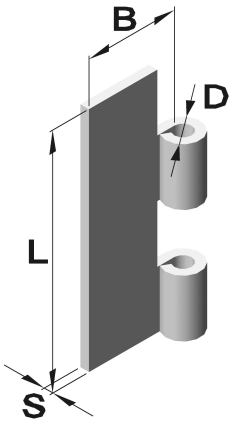

Hinge Module 4mm

Article no.		Dimensions in mm				
Art.	Material Stainless steel 1.4301	L	B	S	Pin Ø	D
6131	**.30**	100	30	4	8	16
6133	**.30**	100	40	4	8	16
6135	**.30**	100	50	4	8	16
6137	**.30**	100	60	4	8	16
6139	**.30**	100	80	4	8	16

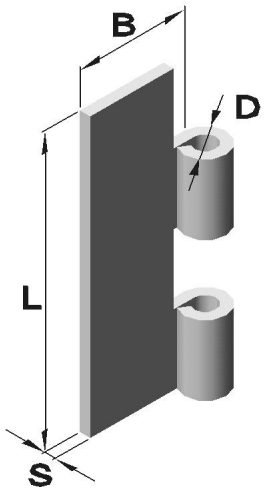

Hinge Module 5mm

Article no.		Dimensions in mm				
Art.	Material Stainless steel 1.4301	L	B	S	Pin Ø	D
6140	**.30**	120	30	5	10	20
6142	**.30**	120	40	5	10	20
6144	**.30**	120	50	5	10	20
6146	**.30**	120	60	5	10	20
6148	**.30**	120	80	5	10	20

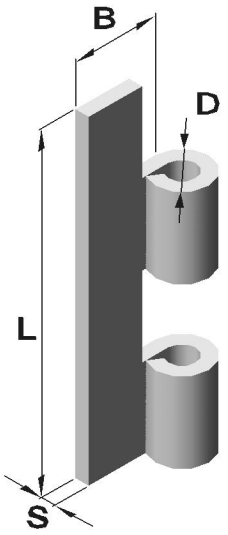

Management System ISO 9001:2015 ISO 14001:2015 TÜVRheinland ZERTIFIZIERT www.tuv.com ID 9108624624

Further material and surface finishes on demand. We will be pleased to give you advice.
Phone: +49 (0) 231 / 725 790 -0 eMail: info@hokon-verschlusstechnik.de
Fax: +49 (0) 231 / 725 790 -10 Homepage: www.hokon-verschlusstechnik.de

Fitschen Module
Stainless steel

Fitschen Module 3mm

Article no.			Dimensions in mm				
Art.	Execution	Material Stainless steel 1.4301	L	B	S	Pin Ø	D
6210	.01	.30	40	20	3	6	12
6210	.03	.30	40	30	3	6	12
6210	.05	.30	40	50	3	6	12
6210	.07	.30	40	80	3	6	12
6210	.09	.30	40	120	3	6	12

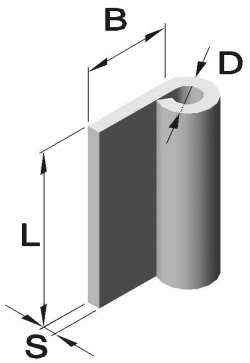

Fitschen Module 4mm

Article no.			Dimensions in mm				
Art.	Execution	Material Stainless steel 1.4301	L	B	S	Pin Ø	D
6210	.21	.30	50	30	4	8	16
6210	.23	.30	50	50	4	8	16
6210	.25	.30	50	80	4	8	16

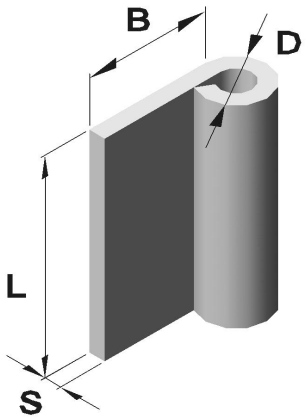

Fitschen Module 5mm

Article no.			Dimensions in mm				
Art.	Execution	Material Stainless steel 1.4301	L	B	S	Pin Ø	D
6210	.31	.30	60	40	5	10	20
6210	.33	.30	60	60	5	10	20
6210	.35	.30	60	80	5	10	20

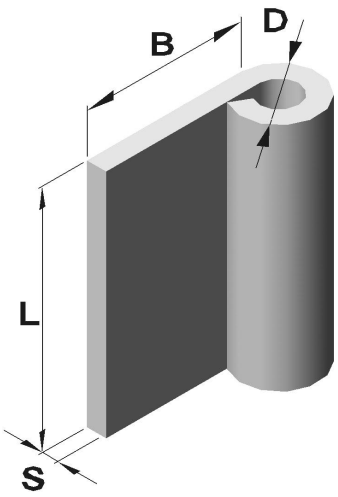

Fitschen Module
Stainless steel

Pin „BG“- compressed

Article no.		Dimensions in mm	
Art.	Material Stainless steel 1.4301	L	D Ø
6151	.30	80	6
6153	.30	100	8
6155	.30	120	10

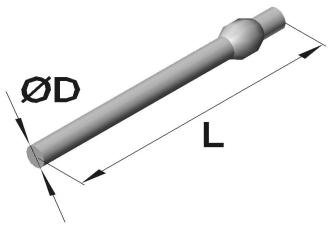

Pin „BT“- with collar

Article no.		Dimensions in mm			
Art.	Material Stainless steel 1.4301	D Ø	L	F	E
6161	.30	6	66	3	12
6163	.30	8	86	4	16
6165	.30	10	106	5	20

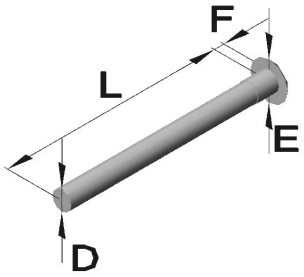

Plug „BS“- with collar

Article no.		Dimensions in mm			
Art.	Material Stainless steel 1.4301	D Ø	L	F	E
6171	.30	6	12	3	12
6173	.30	8	12	4	16
6175	.30	10	12	5	20

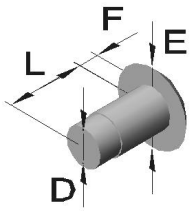

TÜVRheinland ZERTIFIZIERT
Management System
ISO 9001:2015
ISO 14001:2015
www.tuv.com ID 9108624624

Further material and surface finishes on demand. We will be pleased to give you advice.
Phone: +49 (0) 231 / 725 790 -0 eMail: info@hokon-verschlusstechnik.de
Fax: +49 (0) 231 / 725 790 -10 Homepage: www.hokon-verschlusstechnik.de

Spring hinge
Stainless steel

Rotation direction of the hinge

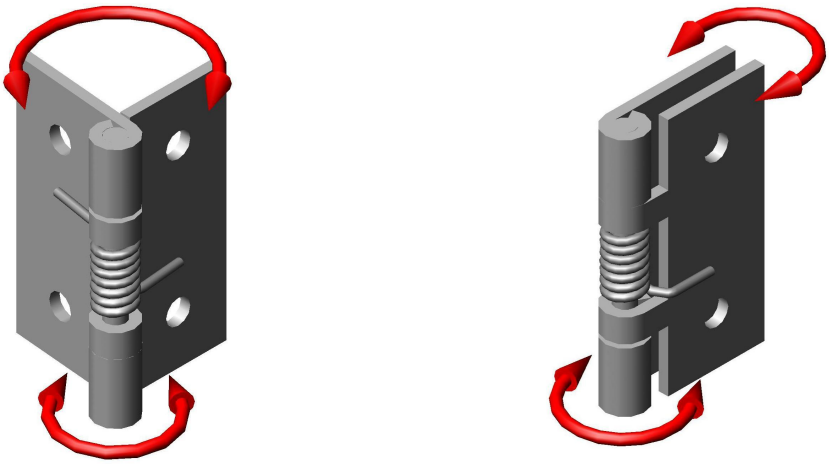

Rotation direction of the spring

Execution_.01 (Spring **opening** mounted)	**Execution _.02** (Spring **closed** mounted)

F = Power of the spring to a point in 100mm from the hinge axis.
By turning you get a linear power gain measured in grams.
Initial position / delivery condition = 0°

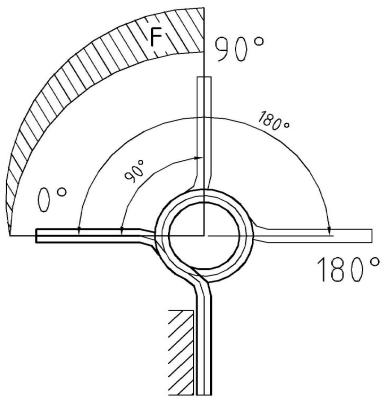

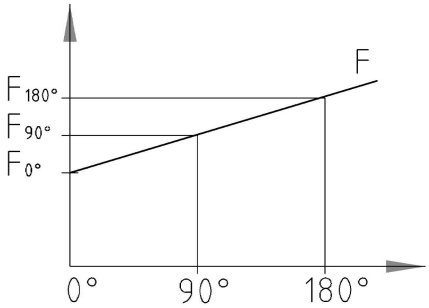

F= spring force

F (0°) = 50g
F (90°) = 100g
F (180°) = 150g

Spring hinges
Stainless steel

Art.no. 6062 (perforated and countersunk)

Tension spring in stainless steel

Article no.			Spring force in g		
Series	Execution	Material Stainless steel 1.4301	0°	90°	180°
6062	.01	.30	60	90	120
6062	.02	.30	60	90	120

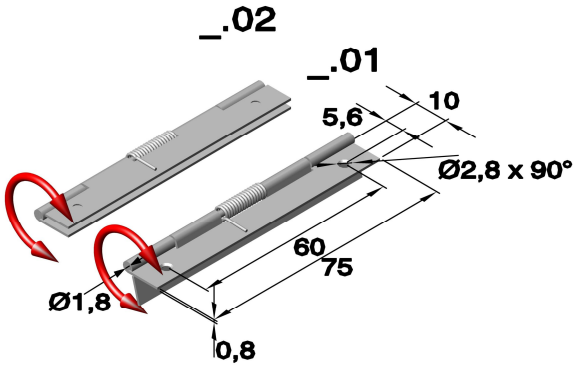

Art.no. 6063

Tension spring in steel or stainless steel.

Article no.			Spring force in g		
Series	Execution	Material Stainless steel 1.4301	0°	90°	180°
6063	.01	.30	60	90	120
6063	.02	.30	60	90	120

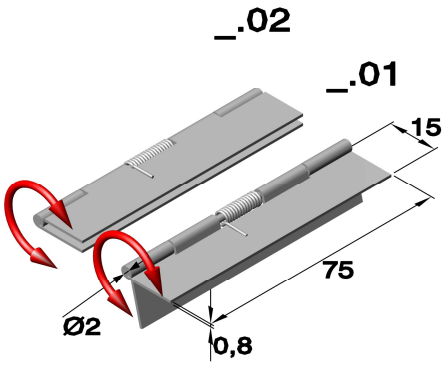

Art.no. 6065 (perforated)

Tension spring in steel or stainless steel.

Article no.			Spring force in g		
Series	Execution	Material Stainless steel 1.4301	0°	90°	180°
6065	.01	.30	40	60	80
6065	.02	.30	40	60	80

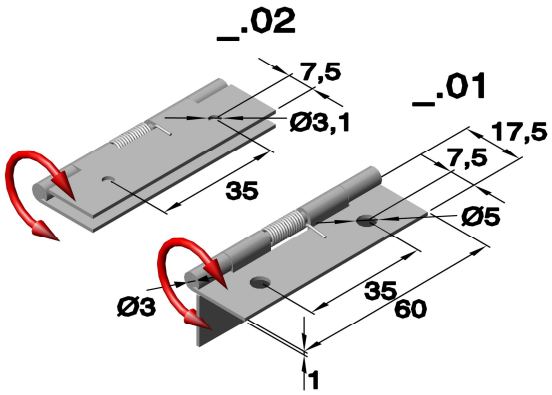

TÜVRheinland ZERTIFIZIERT
Management System ISO 9001:2015 ISO 14001:2015
www.tuv.com ID 9108624624

Further material and surface finishes on demand. We will be pleased to give you advice.
Phone: +49 (0) 231 / 725 790 -0
Fax: +49 (0) 231 / 725 790 -10
eMail: info@hokon-verschlusstechnik.de
Homepage: www.hokon-verschlusstechnik.de

Spring hinges
Stainless steel

Art.no. 6066 (perforated)

Tension spring in stainless steel.

Article no.			Spring force in g		
Series	Execution	Material Stainless steel 1.4301	0°	90°	180°
6066	.01	.30	550	750	950
6066	.02	.30	550	750	950

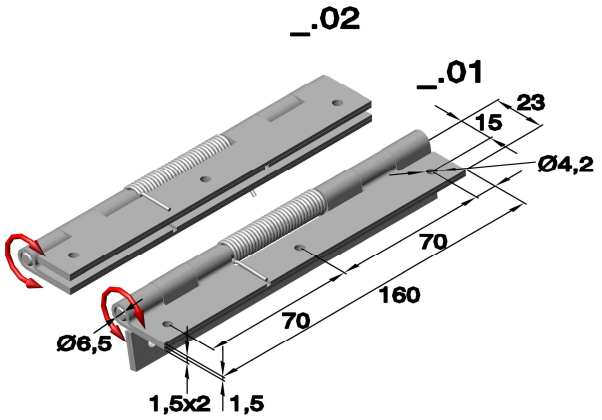

Art.no. 6067

Tension spring in stainless steel.

Article no.			Spring force in g		
Series	Execution	Material Stainless steel 1.4301	0°	90°	180°
6067	.01	.30	140	220	300
6067	.02	.30	140	220	300

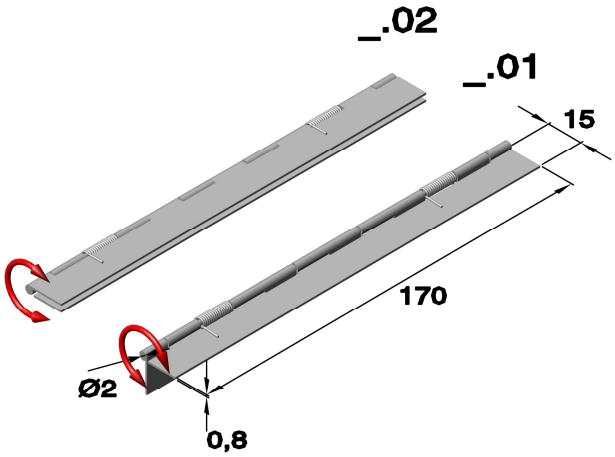

Art.no. 6068 (perforated)

Tension spring in stainless steel

Article no.				in mm	Spring force in g		
Series	Execution	Material Stainless steel 1.4301	Spring	Spring wire Ø	0°	90°	180°
6068	.01	.30	-	1,5	320	640	1060
6068	.02	.30	-	1,5	320	640	1060
6068	.01	.30	.F08	0,8	20	50	80
6068	.02	.30	.F08	0,8	20	50	80
6068	.01	.30	.F10	1,0	40	120	200
6068	.02	.30	.F10	1,0	40	120	200
6068	.01	.30	.F1,25	1,25	140	300	500
6068	.02	.30	.F1,25	1,25	140	300	500

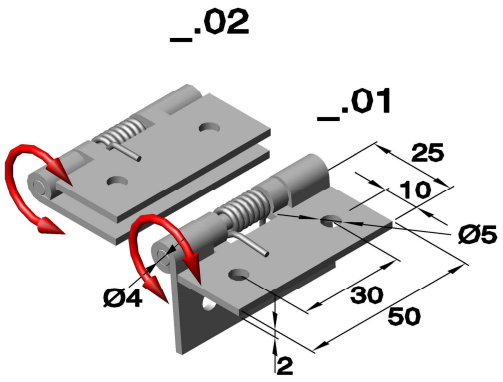

Spring hinges
Stainless steel

Art.no. 6107 (perforated)

Tension spring in stainless steel.

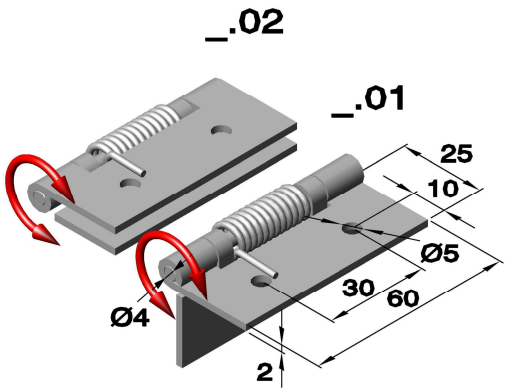

Article no.				in mm	Spring force in g		
Series	Execution	Material Stainless steel 1.4301	Spring	Spring wire Ø	0°	90°	180°
6107	.01	.30	.F18	1,8	400	900	1400
6107	.02	.30	.F18	1,8	400	900	1400

Art.no. 6108 (perforated)

Tension spring in stainless steel.

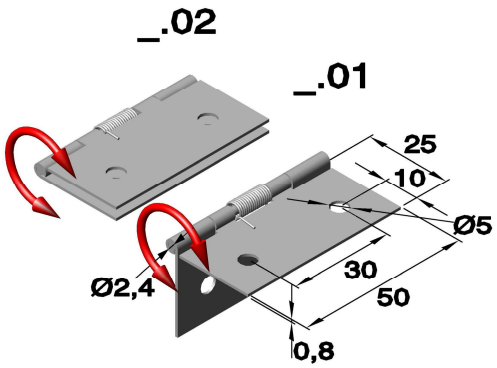

Article no.				in mm	Spring force in g		
Series	Execution	Material Stainless steel 1.4301	Spring	Spring wire Ø	0°	90°	180°
6108	.01	.30	.F05	0,5	10	20	30
6108	.02	.30	.F05	0,5	10	20	30
6108	.01	.30	.F06	0,6	20	40	60
6108	.02	.30	.F06	0,6	20	40	60
6108	.01	.30	.F08	0,8	30	60	90
6108	.02	.30	.F08	0,8	30	60	90

Art.no. 99.A100 (perforated)

Tension spring in stainless steel.

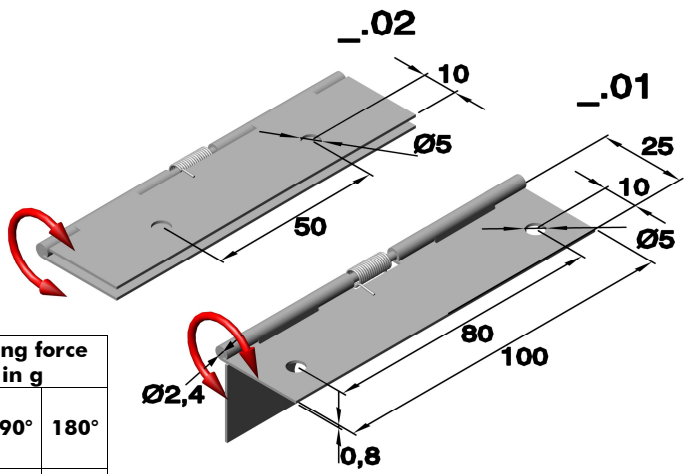

Article no.				in mm	Spring force in g		
Series	Execution	Material Stainless steel 1.4301	Spring	Spring wire Ø	0°	90°	180°
99.A100	.01	.30	-	0,4	7	15	25
99.A100	.02	.30	-	0,4	7	15	25
99.A100	.01	.30	.F08	0,8	30	60	90
99.A100	.02	.30	.F08	0,8	30	60	90

TÜVRheinland ZERTIFIZIERT Management System ISO 9001:2015 ISO 14001:2015 www.tuv.com ID 9108624624

Further material and surface finishes on demand. We will be pleased to give you advice.
Phone: +49 (0) 231 / 725 790 -0 eMail: info@hokon-verschlusstechnik.de
Fax: +49 (0) 231 / 725 790 -10 Homepage: www.hokon-verschlusstechnik.de

Spring hinges
Stainless steel

Art.no. 6164

Tension spring in stainless steel.

Article no.			Spring force in g		
Series	Execution	Material Stainless steel 1.4301	0°	90°	180°
6164	.01	.30	60	300	600
6164	.02	.30	60	300	600

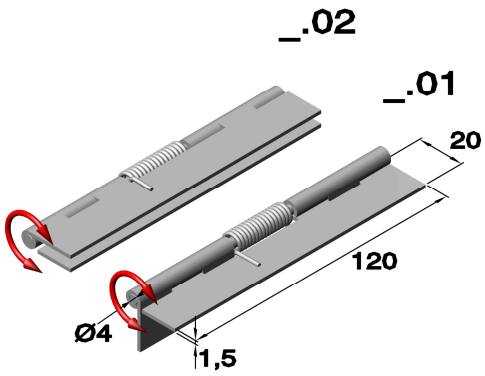

Art.no. 6164.__ /G (perforated and countersunk)

Tension spring in stainless steel.

Article no.			Spring force in g		
Series	Execution	Material Stainless steel 1.4301	0°	90°	180°
6164	.01	.30/G	60	300	600
6164	.02	.30/G	60	300	600

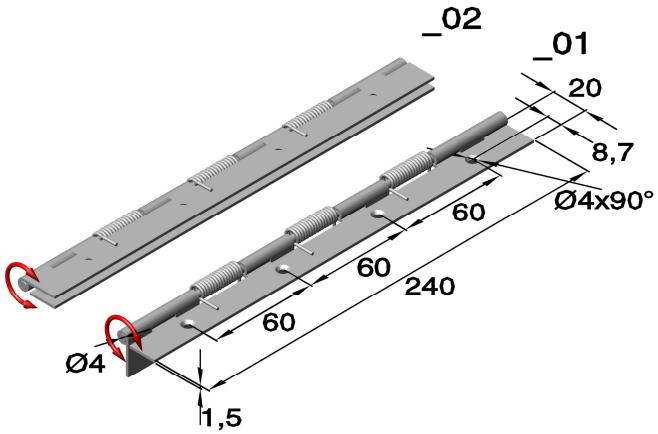

Art.no. 6165

Tension spring in stainless steel.

Article no.			Spring force in g		
Series	Execution	Material Stainless steel 1.4301	0°	90°	180°
6165	.01	.30	120	600	1200
6165	.02	.30	120	600	1200

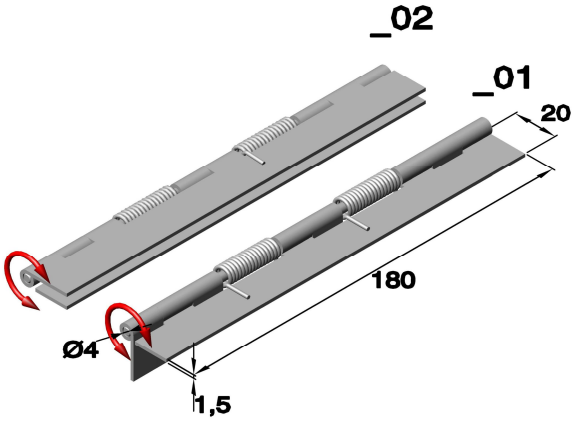

Spring hinges
Stainless steel

Art.no. 6165.__ /G (perforated and countersunk)

Tension spring in stainless steel.

Article no.			Spring hinges in g		
Series	Execution	Material Stainless steel 1.4301	0°	90°	180°
6165	.01	.30/G	120	600	1200
6165	.02	.30/G	120	600	1200

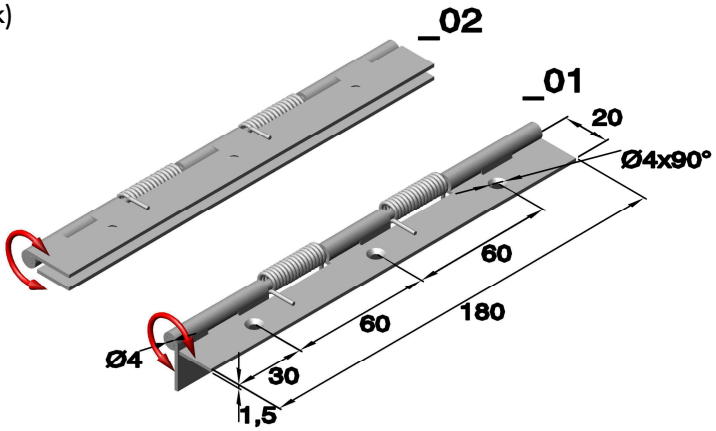

Art.no. 6166

Tension spring in stainless steel.

Article no.			Spring force in g		
Series	Execution	Material Stainless steel 1.4301	0°	90°	180°
6166	.01	.30	180	900	1800
6166	.02	.30	180	900	1800

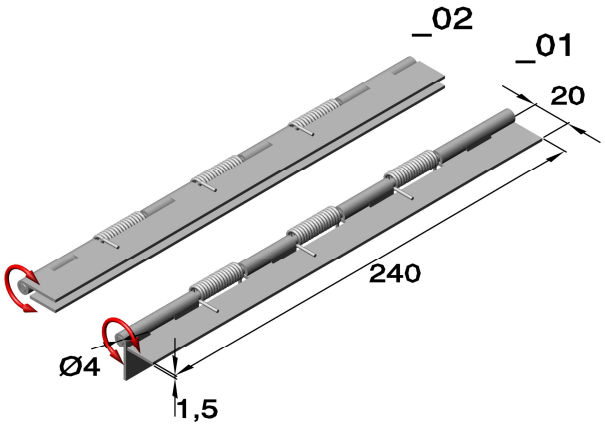

Art.no. 6166.__. /G (perforated and countersunk)

Tension spring in stainless steel.

Article no.			Spring force in g		
Series	Execution	Material Stainless steel 1.4301	0°	90°	180°
6166	.01	.30/G	180	900	1800
6166	.02	.30/G	180	900	1800

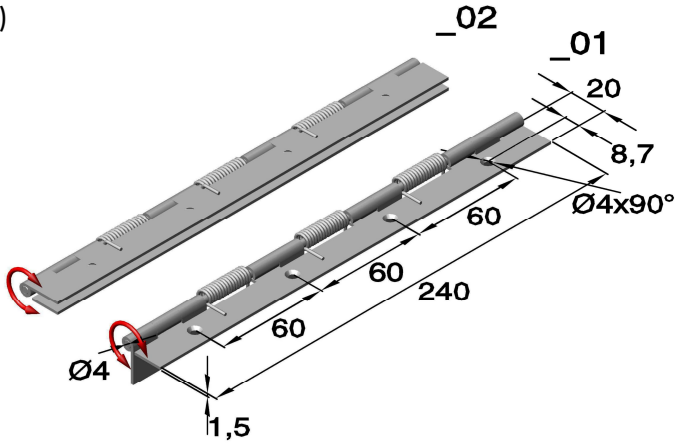

TÜVRheinland ZERTIFIZIERT
Management System ISO 9001:2015 ISO 14001:2015
www.tuv.com ID 9108624624

Further material and surface finishes on demand. We will be pleased to give you advice.
Phone: +49 (0) 231 / 725 790 -0 eMail: info@hokon-verschlusstechnik.de
Fax: +49 (0) 231 / 725 790 -10 Homepage: www.hokon-verschlusstechnik.de

Spring hinges
Stainless steel

Art.no. 6169 (perforated)

Tension spring in stainless steel.

Article no.			Spring force in g		
Series	Execution	Material Stainless steel 1.4016	0°	90°	180°
6169	.01	.30	50	100	150

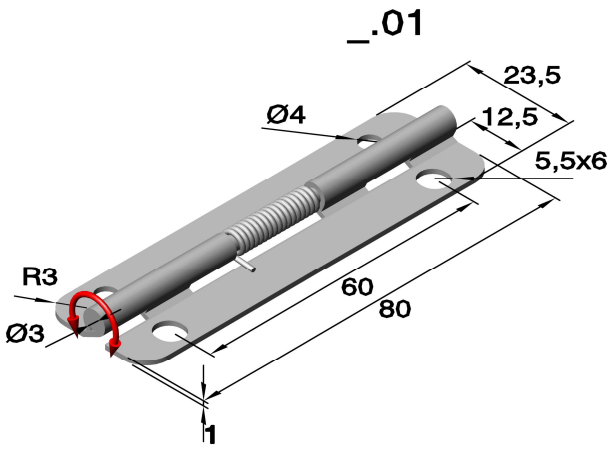

Art.no. 64080 (perforated and countersunk)

Tension spring in stainless steel.

Article no.				in mm	Spring force in g		
Series	Execution	Material Stainless steel 1.4301	Spring	Spring wire Ø	0°	90°	180°
64080	.01	.30	.F15	1,5	150	520	920
64080	.02	.30	.F15	1,5	150	520	920

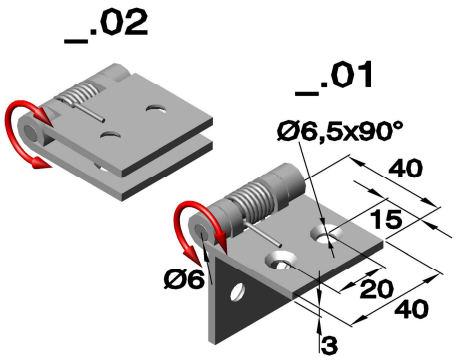

Art.no. 6941.02.30 (drilled)

Tension spring in stainless steel.

Article no.				in mm	Spring force in g		
Series	Execution	Material Stainless steel 1.4301	Spring	Spring wire Ø	0°	90°	180°
6941	.02	.30	.F28	2,8	300	1600	2600

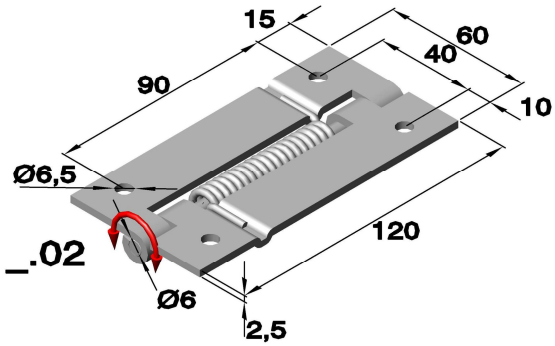

Spring hinges
Stainless steel

Art.no. 6167 (perforated)

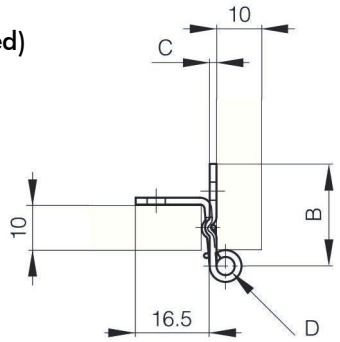

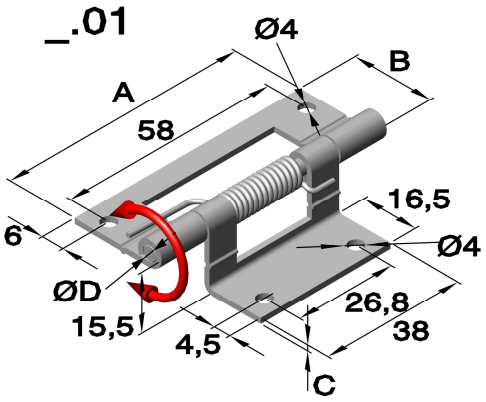

Article no.			in mm			Spring force in g		
Series	Execution	Material Stainless steel polished 1.4401	A	B	C	0°	90°	180°
6167	.01	.35	66	22,5	1,5	60	200	380

Art.no. 6486 (perforated)

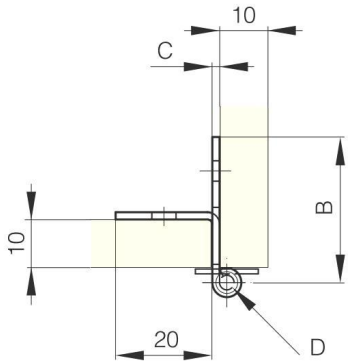

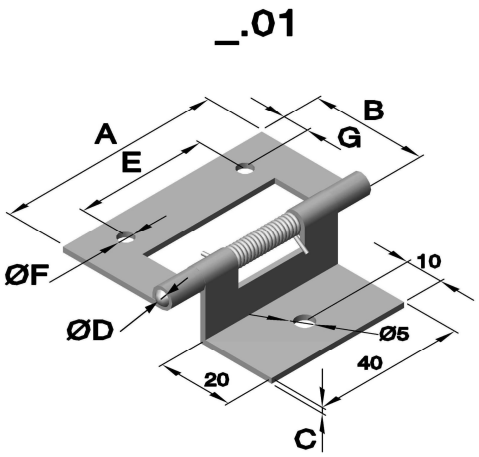

Article no.			Dimensions in mm						
Series	Execution	Material Stainless steel 1.4401	A	B	C	Ø D	E	Ø F	G
6486	.01	.35	60	30	1,5	3	36	4,2	7

TÜVRheinland ZERTIFIZIERT
Management System ISO 9001:2015 ISO 14001:2015
www.tuv.com ID 9108624624

Further material and surface finishes on demand. We will be pleased to give you advice.
Phone: +49 (0) 231 / 725 790 -0 eMail: info@hokon-verschlusstechnik.de
Fax: +49 (0) 231 / 725 790 -10 Homepage: www.hokon-verschlusstechnik.de

Spring hinges
Stainless steel

Art.no. 158. 5314.__.__ (adjustable spring force)

with integrated spring.

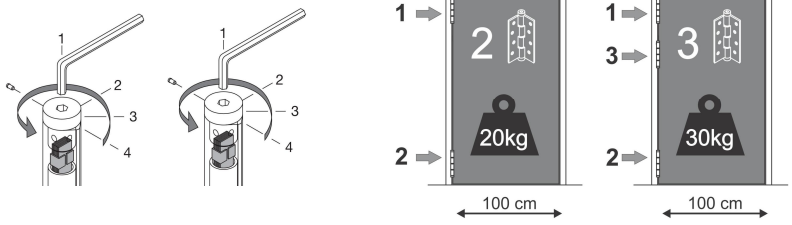

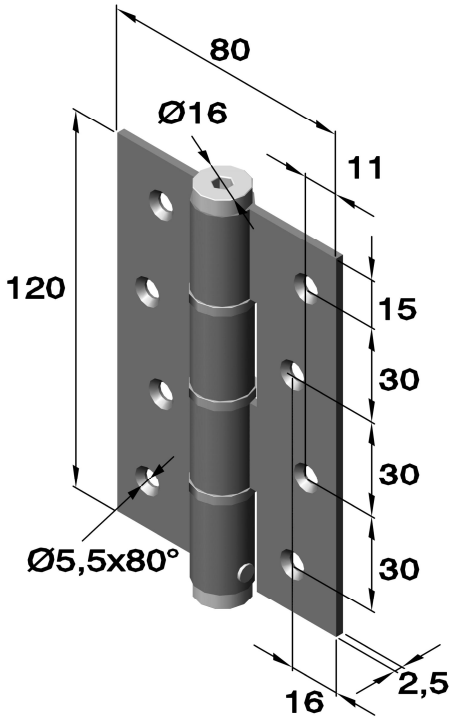

Article no.		Load in kg	
Series	Material Stainless steel brushed 1.4301	By **2** Hinges	By **3** Hinges
158.5314.05	**.30**	20	30

This article will be delivered only as a pair.
The door closes automatically,
Installed mechanism is very robust and adjustable.
Max. opening angle 180°.

Art.no. 158. 5814.__.__ (adjustable spring force)

with integrated spring.

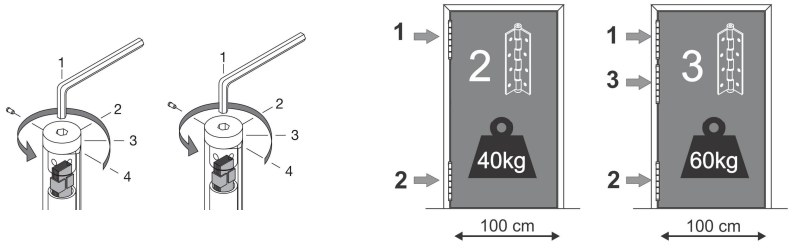

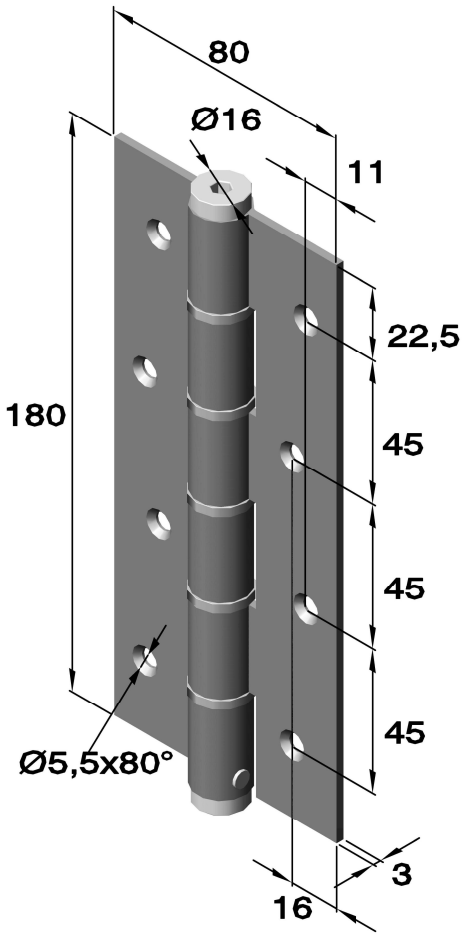

Article no.		Load in kg	
Series	Material Stainless steel brushed 1.4301	By **2** Hinges	By **3** Hinges
158.5814.05	**.30**	40	60

This article will be delivered only as a pair.
The door closes automatically,
Installed mechanism is very robust and adjustable.
Max. opening angle 180

Spring hinges
Stainless steel

Art.no. 158. 5414.__.__ (adjustable spring force)

Double joint hinge/Swing door hinge with integrated spring.

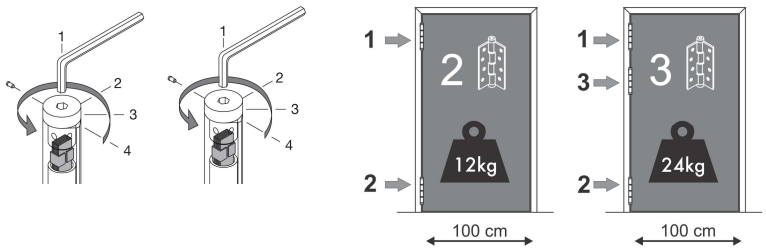

Article no.		Load in kg	
Series	Material Stainless steel brushed 1.4301	By **2** Hinges	By **3** Hinges
158.5414.05	**.30**	12	24

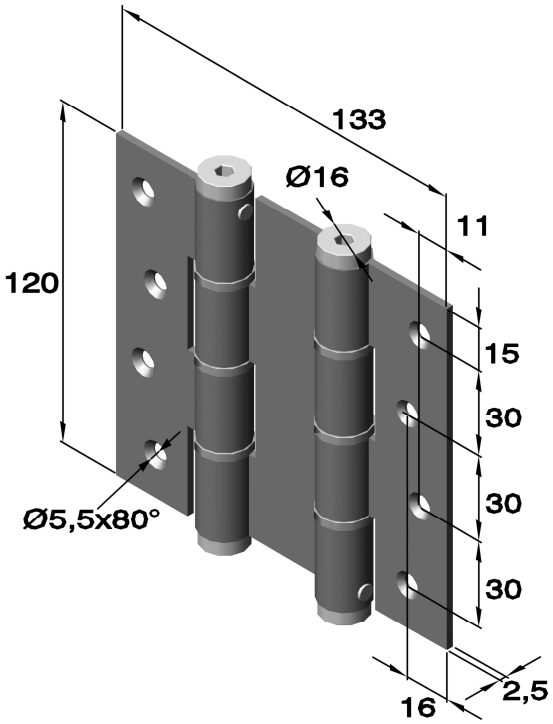

This article will be delivered only as a pair.
The door closes automatically,
Installed mechanism is very robust and adjustable.
Max. opening angle 180°.

Art.no. 158. 5914.__.__ (adjustable spring force)

Double joint hinge/Swing door hinge with integrated spring

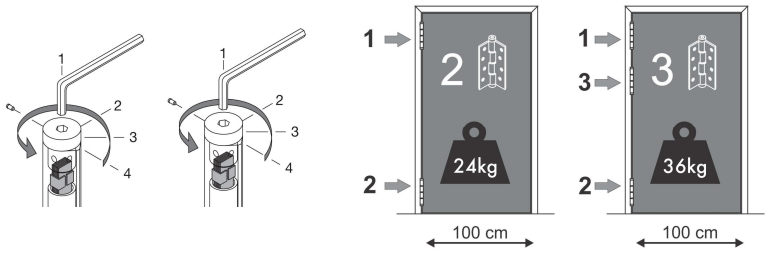

Article no.		Load in kg	
Series	Material Stainless steel brushed 1.4301	By **2** Hinges	By **3** Hinges
158.5914.05	**.30**	24	36

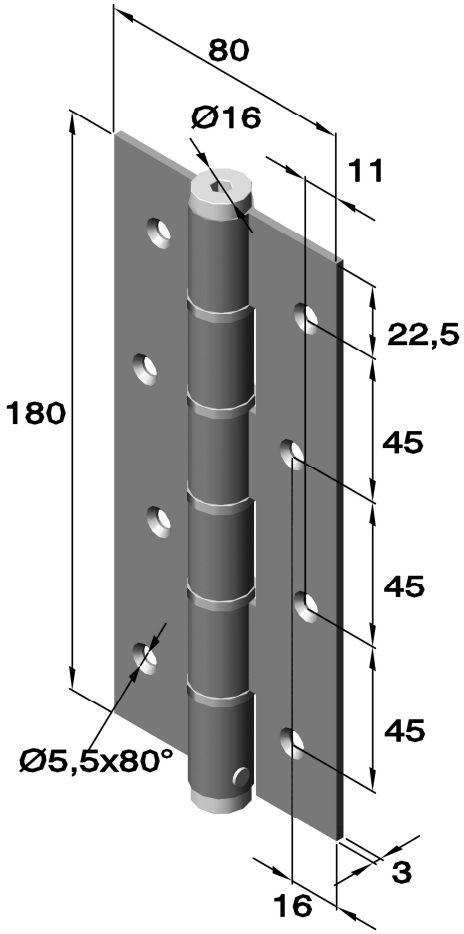

This article will be delivered only as a pair.
The door closes automatically,
Installed mechanism is very robust and adjustable.
Max. opening angle 180°.

TÜVRheinland ZERTIFIZIERT Management System ISO 9001:2015 ISO 14001:2015 www.tuv.com ID 9108624624

Further material and surface finishes on demand. We will be pleased to give you advice.
Phone: +49 (0) 231 / 725 790 -0 eMail: info@hokon-verschlusstechnik.de
Fax: +49 (0) 231 / 725 790 -10 Homepage: www.hokon-verschlusstechnik.de

Spring hinges
Stainless steel

Art.no. 158.I-5___.__ (adjustable spring force)

with integrated spring

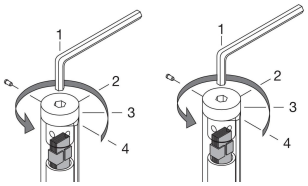

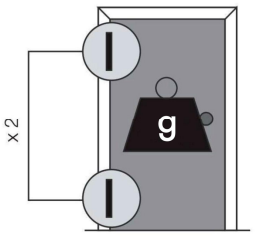

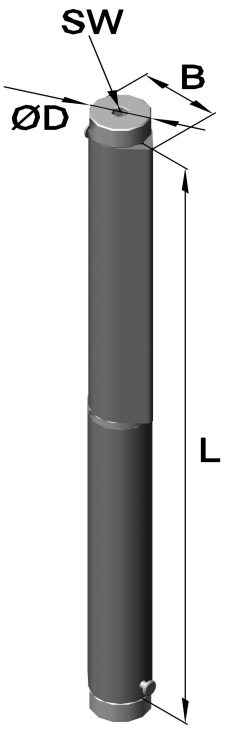

Article no.		Dimensions in mm				Spring load in kg
Series	Material Stainless steel raw (V2A)	L	B	SW	ØD	g
158.I-5524	**.05.30**	120	21	5	18	20
158.I-5324	**.05.30**	180	21	5	18	40
158.I-5124	**.05.30**	235	26	5	22	60

This article will be delivered only as a pair.
The door closes automatically,
Installed mechanism is very robust and adjustable.
Max. opening angle 180°.

Art.no. 158.I-5___.__(adjustable spring force)

with integrated spring, with ball bearing

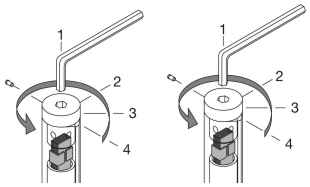

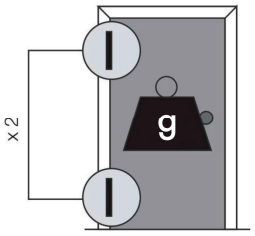

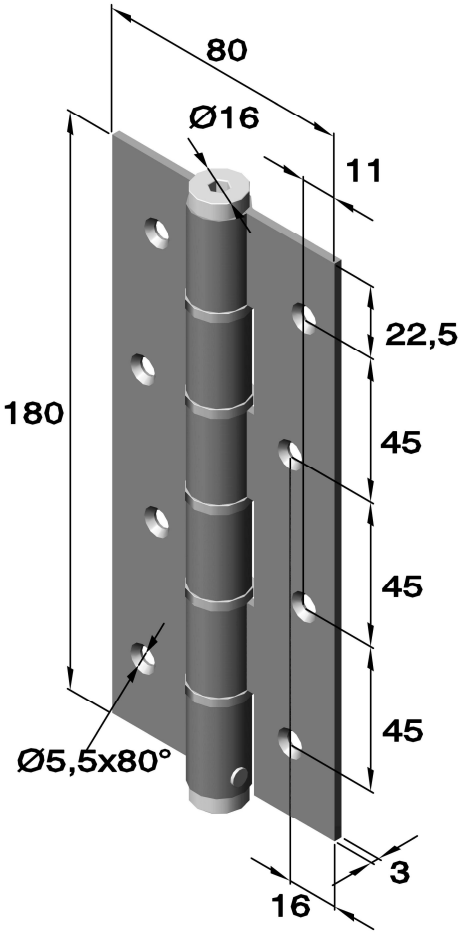

Article no.		Dimensions in mm				Spring load in kg
Series	Material Stainless steel raw (V2A)	L	B	SW	ØD	g
158.I-5334	**.05.30**	180	21	5	18	60
158.I-5134	**.05.30**	235	26	5	22	120

This article will be delivered only as a pair.
The door closes automatically,
Installed mechanism is very robust and adjustable.
Max. opening angle 180°.

Torque hinges
Stainless steel

Art.no.:150.HG-TS (perforated)

with constant torque.

The indicated torques can have tolerances.

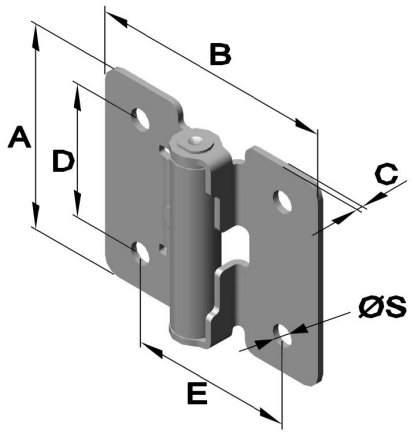

Article no.			Dimensions in mm						Torques in N.m.
Series	Execution	Material: Stainless steel ball-polished 1.4301	A	B	C	D	E	ØS	
150.HG-TS	03	.30	36	32	1,2	18	21	4,3	0,35
	07	.30	48	40	1,2	26	32	4,3	0,7
	15	.30	48	50	2	36	32	4,3	1,5

Art.no.:150.SFTH (perforated)

with constant torque.

The indicated torques can have tolerances.

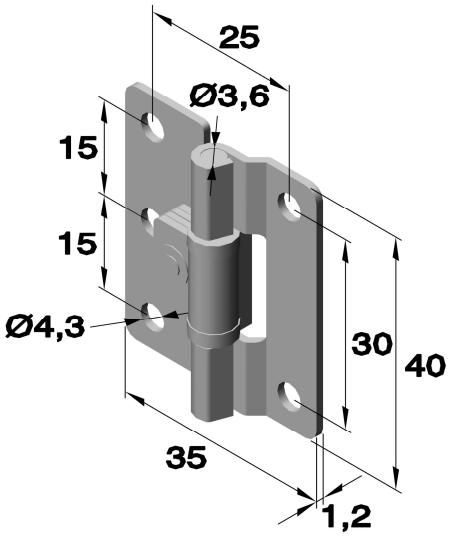

Article no.			Torques in N.m.
Series	Execution	Material: Stainless steel ball-polished 1.4301	
150.SFTH	-02-5	.30	0,5

Art.no.:150.SFTH (perforated)

with constant torque.

The indicated torques can have tolerances.

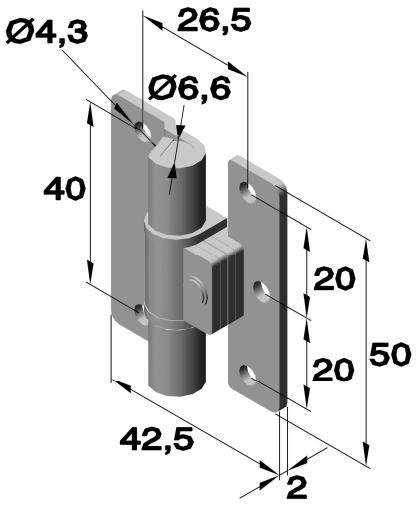

Article no.			Torque in N.m.
Series	Execution	Material: Stainless steel ball-polished 1.4301	
150.SFTH	-03-9	.30	0,9
	-03-19	.30	1,9

TÜVRheinland ZERTIFIZIERT Management System ISO 9001:2015 ISO 14001:2015 www.tuv.com ID 9108624624

Further material and surface finishes on demand. We will be pleased to give you advice.
Phone: +49 (0) 231 / 725 790 -0 eMail: info@hokon-verschlusstechnik.de
Fax: +49 (0) 231 / 725 790 -10 Homepage: www.hokon-verschlusstechnik.de

Torque hinges
Stainless steel

Art.no.:150.SFTH (perforated)

with constant torque.

The indicated torques can have tolerances.

Article no.			Torque in N.m.
Series	Execution	Material Stainless steel ball-polished 1.4301	
150.SFTH	-05-35	.30	3,4
	-05-58	.30	5,7

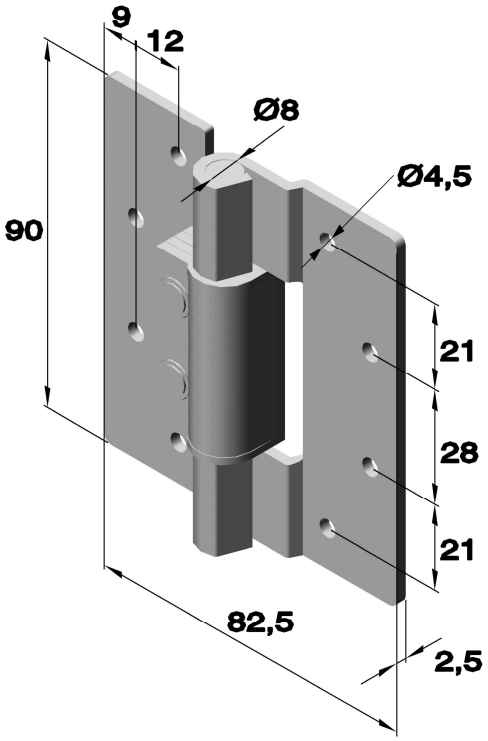

Art.no. 6493 (perforated)

Hinges with invisible stop
with constand torque

The indicated torques can have tolerances.

Article no.			Dimensions in mm			Torque in N.m.
Series	Execution	Material Stainless steel ball-polishes 1.4016	A	B	C	
6493	.01	.33	40	67	29.5	0,7

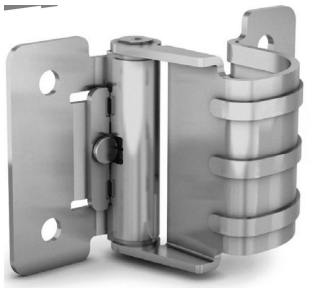

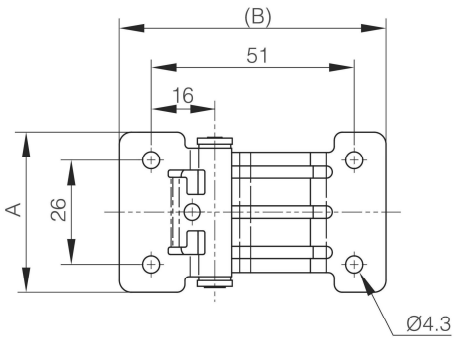

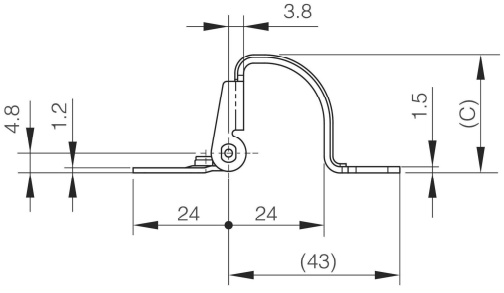

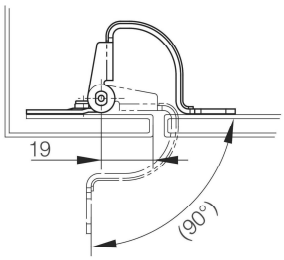

Torque hinges
Stainless steel

Art.no.:150.HG-TA (perforated)

with constant torque.

The indicated torques can have tolerances.

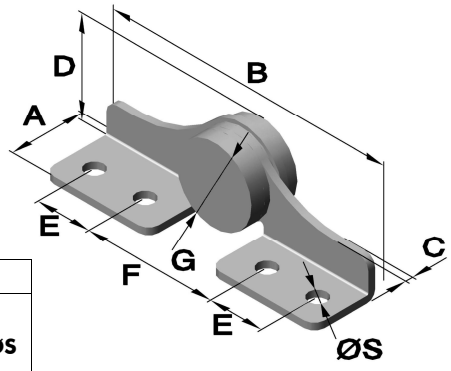

Article no.			Torque in N.m.	Dimensions in mm						
Series	Execution	Material: Stainless steel ball-polished 1.4016		A	B	C	D	E	F	ØS
150.HG-TA	**20L** (left)	**.30**	2	18,5	66	2	18	13	27	4,3
	20R (right)	**.30**								
	30L (left)	**.30**	3							
	30R (right)	**.30**								
	45L (left)	**.30**	4,5	23,5	80	2	25	15	34	5,3
	45R (right)	**.30**								

Art.no.:150.HG-TB (perforated and countersunk)

with constant torque.

The indicated torques can have tolerances.

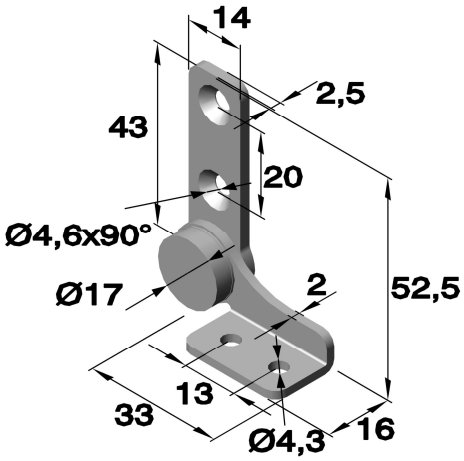

Article no.			Torque in N.m.
Series	Execution	Material: Stainless steel ball-polished 1.4016	
150.HG-TB	**20L** (left)	**.30**	2
	20R (right)	**.30**	
	30L (left)	**.30**	3
	30R (right)	**.30**	

Art.no.:150.HG-TB (perforated and countersunk)

with constant torque.

The indicated torques can have tolerances.

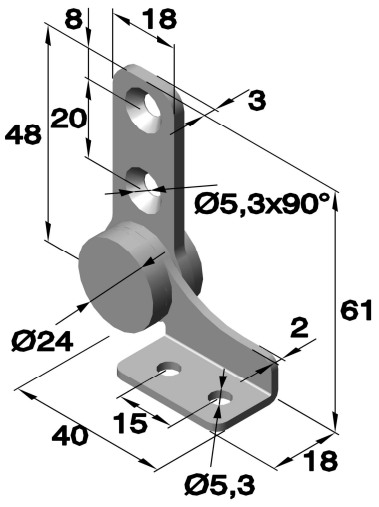

Article no.			Torque in N.m.
Series	Execution	Material: Stainless steel ball-polished 1.4016	
150.HG-TB	**45L** (left)	**.30**	4,5
	45R (right)	**.30**	

TÜVRheinland ZERTIFIZIERT Management System ISO 9001:2015 ISO 14001:2015 www.tuv.com ID 9108624624

Further material and surface finishes on demand. We will be pleased to give you advice.
Phone: +49 (0) 231 / 725 790 -0 eMail: info@hokon-verschlusstechnik.de
Fax: +49 (0) 231 / 725 790 -10 Homepage: www.hokon-verschlusstechnik.de

Torque hinges
Stainless steel

Art.no.:150.HG-IT (perforated)

with constant torque.

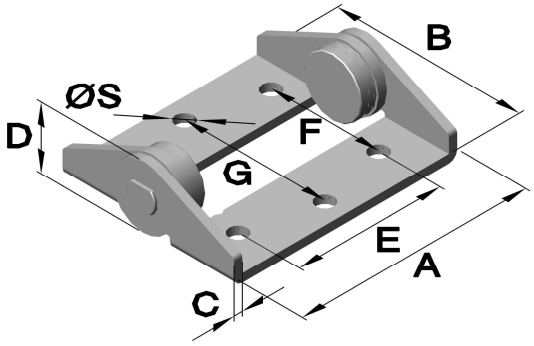

The indicated torques can have tolerances.

Article no.			Torque in N.m.	Dimensions in mm							
Series	Execution	Material Stainless steel ball-polished 1.4301		A	B	C	D	E	F	G	ØS
150.HG-IT	S25	.30	2,5	54	44	2	15,5	34	26	34	4,3
	S35	.30	3,5								
	SF	.30	freely swinging								
	M50	.30	5,0	54	80	2	25	34,8	36	66	5,3
	M70	.30	7,0								
	MF	.30	freely swinging								

Cover for Art.no.:150.HG-IT

Article no.		Material
Series	Execution	Plastic
150.HG-IT	SC	ABS
150.HG-IT	MC	ABS

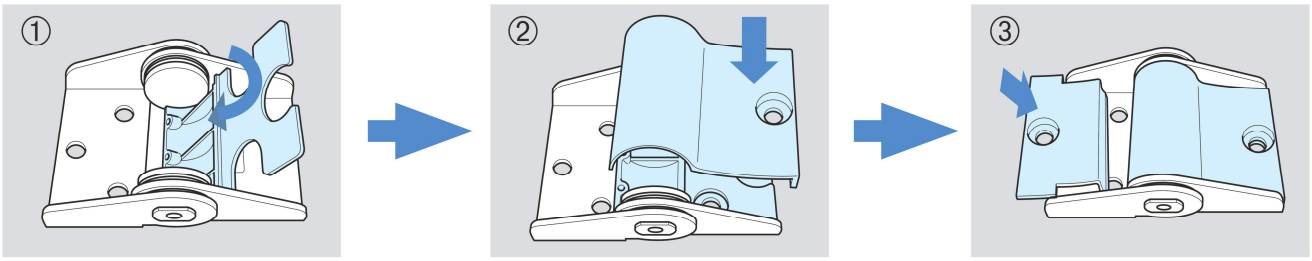

Plant engineering hinges
Stainless steel

Art.no.:HF10 (perforated and countersunk)

with stainless steel pin.

Article no.	
Series	Material
	Stainless steel satin finished
	1.4301
HF10	ES-T3

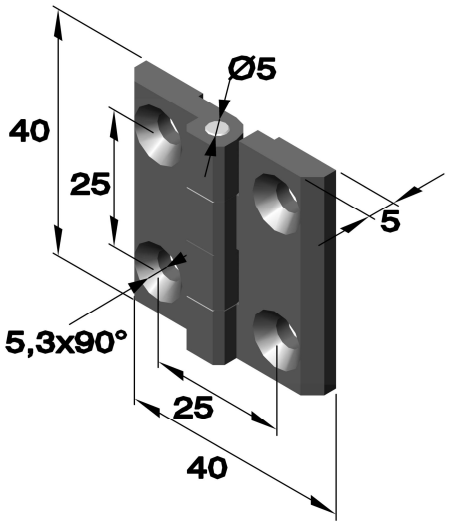

Art.no.:HF30 (perforated and countersunk)

with stainless steel pin.

Article no.	
Series	Material
	Stainless steel satin finished
	1.4301
HF30	ES-T4

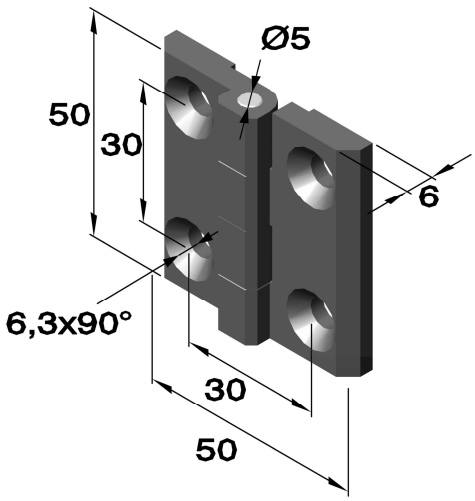

Art.no.:HF50 (perforated and countersunk)

with stainless steel pin.

Article no.	
Series	Material
	Stainless steel satin finished
	1.4301
HF50	ES-T3

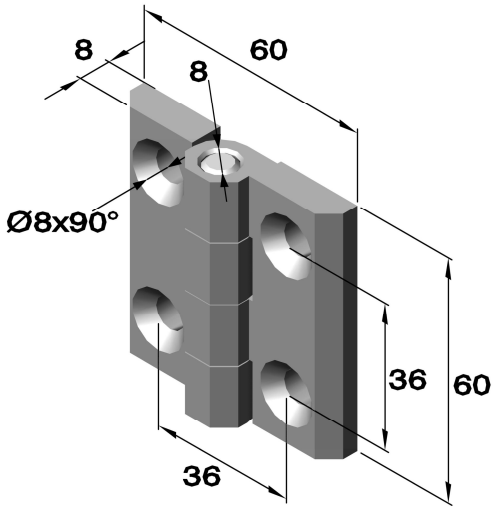

TÜVRheinland ZERTIFIZIERT
Management System ISO 9001:2015 ISO 14001:2015
www.tuv.com ID 9108624624

Further material and surface finishes on demand. We will be pleased to give you advice.
Phone: +49 (0) 231 / 725 790 -0
Fax: +49 (0) 231 / 725 790 -10
eMail: info@hokon-verschlusstechnik.de
Homepage: www.hokon-verschlusstechnik.de

Plant engineering hinges
Stainless steel

Art.no.:HF30 (perforated and countersunk)

with stainless steel pin.

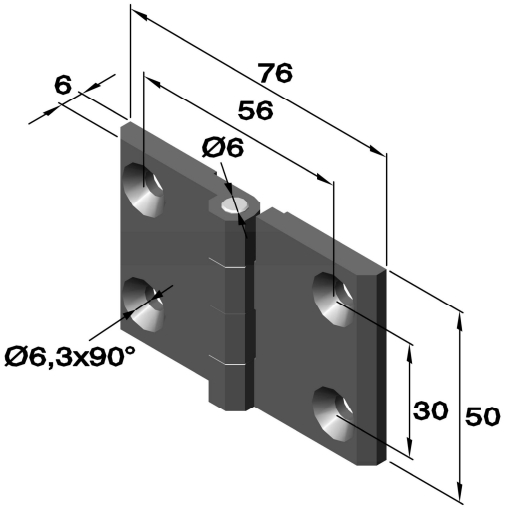

Article no.	
Series	Material
	Stainless steel satin finished
	1.4301
HF30	ES-T10

Art.no.:HF40 (perforated and countersunk)

with stainless steel pin.

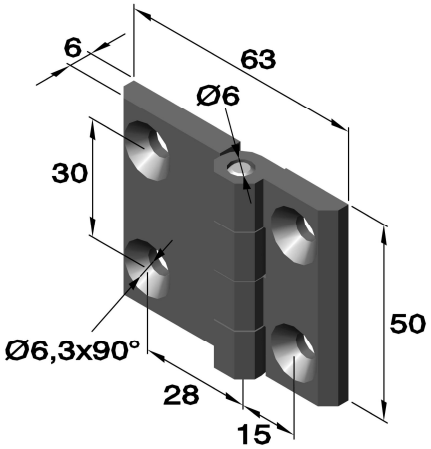

Article no.	
Series	Material
	Stainless steel satin finished
	1.4301
HF40	ES-T3-1

Art.no.:HC90 (perforated and countersunk)

pin in hardened steel.

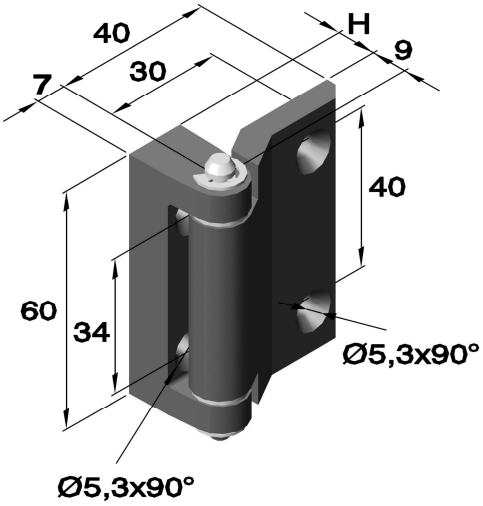

Article no.		Dimensions in mm
Series	Material	
	Stainless steel satin finished	
	1.4301	H
HC90	ES-T-0	0

Plant engineering hinges
Stainless steel

Art.no.:HC10 (with internal thread)

with zinc plated pin.

Sheet thickness 1,5-2,0mm

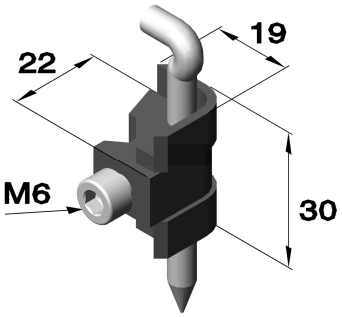

Article no.	
Series	Material
	Stainless steel satin finished
	1.4301
HC10	ES-T20-1

Sheet metal cut out

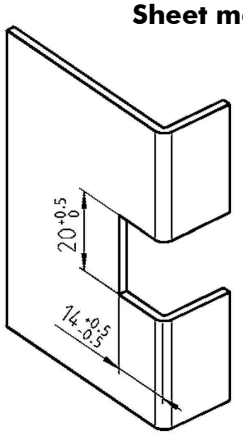

TÜVRheinland ZERTIFIZIERT
Management System
ISO 9001:2015
ISO 14001:2015
www.tuv.com ID 9108624624

Further material and surface finishes on demand. We will be pleased to give you advice.
Phone: +49 (0) 231 / 725 790 -0 eMail: info@hokon-verschlusstechnik.de
Fax: +49 (0) 231 / 725 790 -10 Homepage: www.hokon-verschlusstechnik.de

Cranked hinges
Stainless steel

Art.no.:6031
with fixed pin in stainless steel, perforated

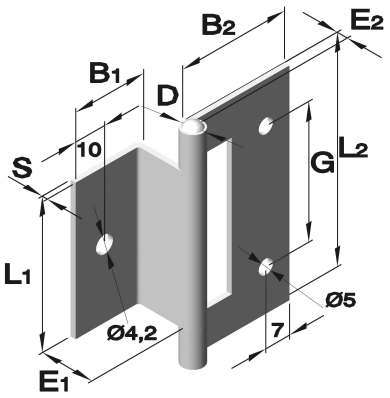

Article no.			Dimensions									
Series	Execution	Material: Stainless steel shiny 1.4401	L1	L2	B1	B2	D	E1	E2	G	S	Pin Ø
6031	.02	.35	40	60	21,5	30	6	14,5	3	36	1,5	3

Art.no.:6032 (perforated and countersunk)
with fixed pin in stainless steel

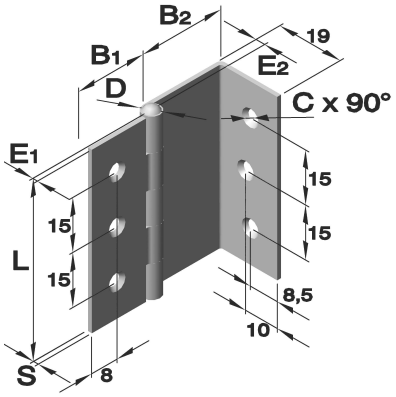

Article no.			Dimensions in mm								
Series	Execution	Material: Stainless steel polished 1.4016	L	B1	B2	C Ø	D	E1	E2	S	Pin Ø
6032	.01	.30	50	20,3	24,5	4,8	5,4	1,5	2,7	1,2	3

Art.no.:6033 (perforated and countersunk)
with fixed pin in stainless steel

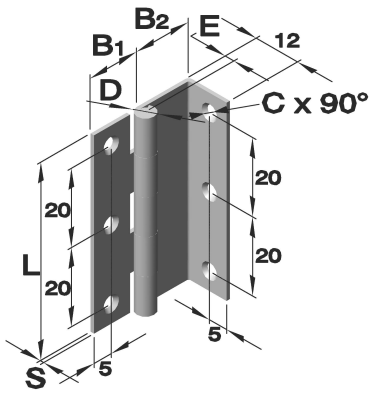

Article no.			Dimensions in mm							
Series	Execution	Material: Stainless steel shiny 1.4016	L	B	B2	C Ø	D	E	S	Pin Ø
6033	.01	.30	50	13,5	15	4	5	2.5	1	3

Art.no.:6038 (perforated and countersunk)
with fixed pin in stainless steel.

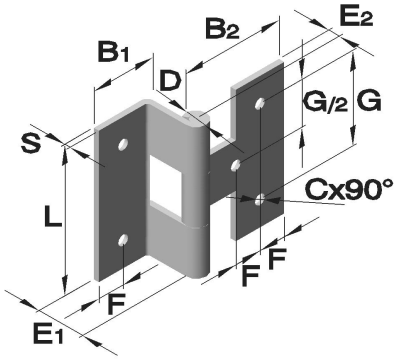

Article no.			Dimensions in mm										
Series	Execution	Material: Stainless steel 1.4301	L	B1	B2	C Ø	D	E1	E2	F	G	S	Pin Ø
6038	.03	.30	38	17	31	2,8	6	16,5	3	7	24	1,5	3

Weld on hinges
Stainless steel

Art.no: 6072
with fixed steel pin without intermediate ring.

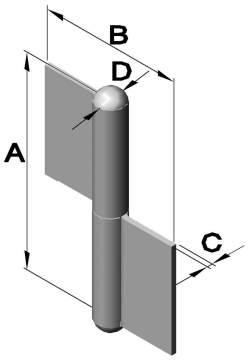

Article no.			Dimensions in mm				
Series	Execution	Material Stainless steel 1.4301	A	B	D	C	Pin
6072	**.01**	**.30**	60	40	8,3	1,5	5,3
6072	**.02**	**.30**	80	50	10	2	6

Art.no: 6072
with fixed steel pin and brass intermediate ring

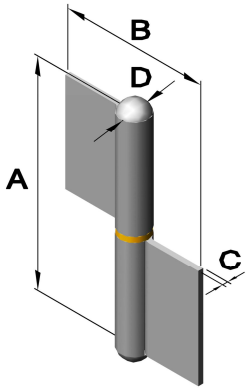

Article no.			Dimensions in mm				
Series	Execution	Material Stainless steel 1.4301	A	B	C	D	Pin Ø
6072	**.03**	**.30**	61,5	40	1,5	8,3	5,3
6072	**.04**	**.30**	81,5	50	2	10	6

Art.no: F2879_(drilled and countersunk)
with welded stainless steel pin,

Trade welded.

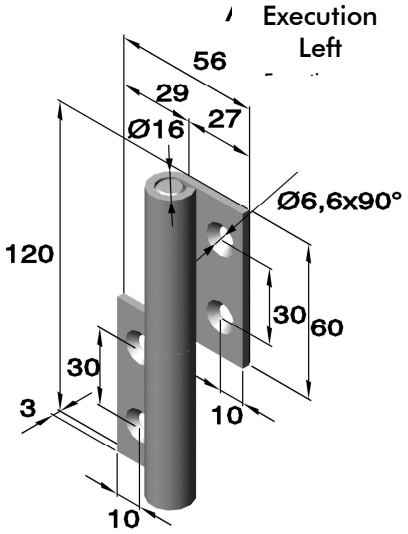

Article no.			Pin Ø
Execution		Material	
Left	Right	Raw Stainless steel 1.4571	
F28795/F28797	**F28796/F28797**	**.30**	10

Further material and surface finishes on demand. We will be pleased to give you advice.
Phone: +49 (0) 231 / 725 790 -0 eMail: info@hokon-verschlusstechnik.de
Fax: +49 (0) 231 / 725 790 -10 Homepage: www.hokon-verschlusstechnik.de

Weld on hinges
Stainless steel

HoKon
VERSCHLUSSTECHNIK &
SONDERKONSTRUKTIONEN

Art.no: 6088 (drilled and countersunk)
with fixed steel pin and steel intermediate ring.

Execution
(.01)

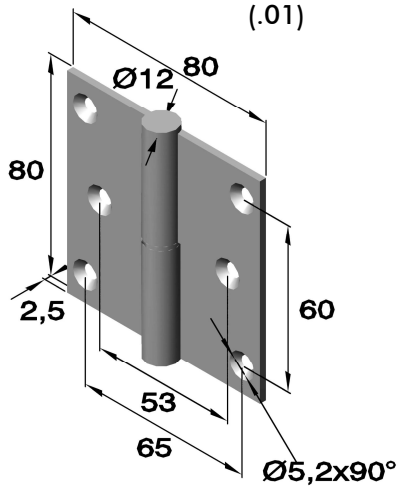

Article no.			
Series	Execution		Material
			Stainless steel brushed
	Left	Right	1.4301
6088	.01	.02	.30

Art.no: 6088 (drilled and countersunk)
with fixed steel pin and steel intermediate ring.

Execution:
(.03)

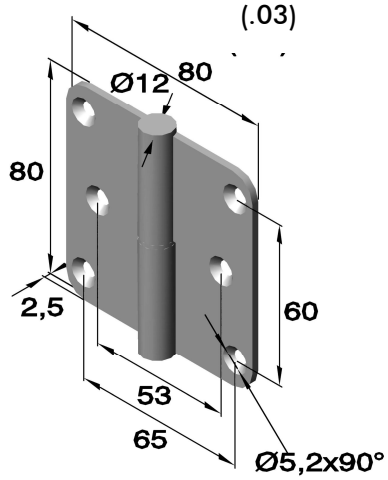

Article no.			
Series	Execution		Material
			Stainless steel brushed
	left	right	1.4301
6088	.03	.04	.30

Art.no: 6088 (drilled and countersunk)
with fixed steel pin and steel intermediate ring.

Execution:
(.09)

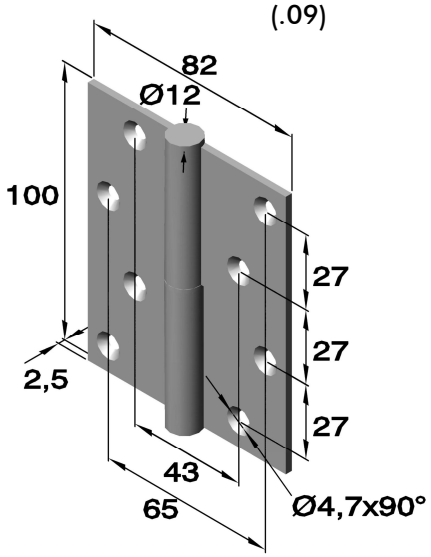

Article no.			
Series	Execution		Material
			Stainless steel brushed
	Left	Right	1.4301
6088	.09	.10	.30

Phone: +49 (0) 231 / 725 790 -0 eMail: info@hokon-verschlusstechnik.de
Fax: +49 (0) 231 / 725 790 -10 Homepage: www.hokon-verschlusstechnik.de

Weld on hinges
Stainless steel

HoKon
VERSCHLUSSTECHNIK &
SONDERKONSTRUKTIONEN

Art.no: 6088(drilled and countersunk)
with fixed steel pin and steel intermediate ring.

Execution:
(.11)

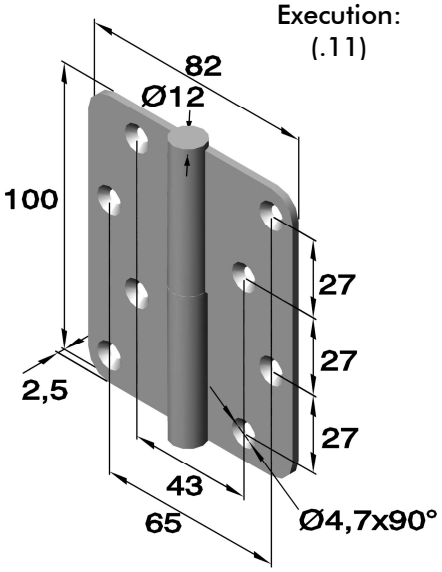

Article no.			
Series	Execution		Material
			Stainless steel brushed
	left	right	1.4301
6088	.11	.12	.30

Art.no: 99.40402 (drilled and countersunk)
with stainless steel pin, without intermediate ring

Execution
(.AL)

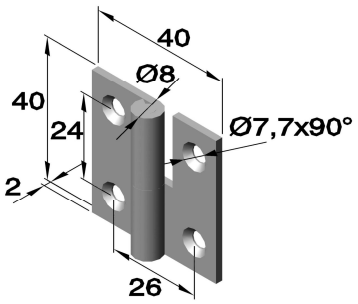

Article no.				Pin Ø
Series	Material	Execution		
	electro polished	Left	Right	
	Stainless steel			
99.40402	.33	/AL	/AR	4

Art.no: 6129 (drilled)
with stainless steel pin, with intermediate ring

Execution
(.01)

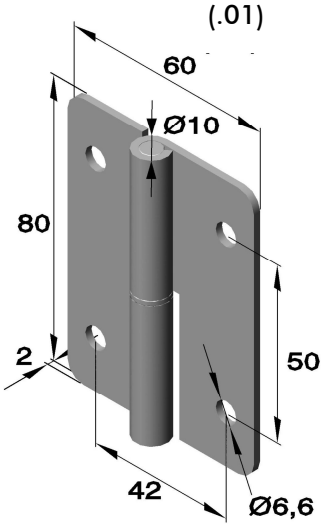

Article no.				Pin Ø
Series	Execution		Material	
	Left	Right	Raw	
			Stainless steel	
6129	.01	.02	.30	6

TÜVRheinland ZERTIFIZIERT
Management System ISO 9001:2015 ISO 14001:2015
www.tuv.com ID 9108624624

Further material and surface finishes on demand. We will be pleased to give you advice.
Phone: +49 (0) 231 / 725 790 -0
Fax: +49 (0) 231 / 725 790 -10
eMail: info@hokon-verschlusstechnik.de
Homepage: www.hokon-verschlusstechnik.de

Weld on hinge rolls
Stainless steel

Weld on hinge rolls „ABR“ with round endings.

FVS with fixed stainless steel pin and stainless steel intermediate ring.
AVS with pull-out stainless steel pin and stainless steel intermediate ring.

Article no.					Dimensions in mm			
Series	L	Execution		Material Stainless steel (V2A)	D	B	d	Load ca. in kg
ABR	40	FVS	-	.30	8	10	5	130
ABR	50	FVS	-	.30	8	10	5	130
ABR	60	FVS	AVS	.30	10	12	6	180
ABR	80	FVS	AVS	.30	13	16	8	260
ABR	90	FVS	-	.30	13	16	8	260
ABR	100	FVS	AVS	.30	16	20	10	310
ABR	120	FVS	AVS	.30	16	20	10	310
ABR	135	FVS	-	.30	18	22,5	12	350
ABR	150	FVS	AVS	.30	20	25,5	13	400
ABR	180	FVS	AVS	.30	20	25,5	13	500

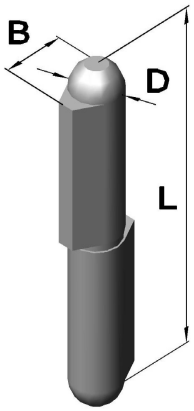

Article no.				Dimensions in mm			
Series	L	Execution	Material Stainless steel (V4A)	D	B	d	Load ca. in kg
ABR	80	FVS	.35	13	16	8	260
ABR	100	FVS	.35	16	20	10	310

Weld on hinge rolls „ABN“ with round endings and lubrication cup.

FES with fixed steel pin and brass intermediate ring
FMS with fixed brass pin and brass intermediate ring

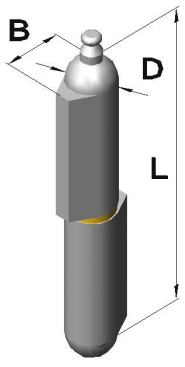

Article no.					Dimensions in mm			
Series	L	Execution		Material Stainless steel (V2A)	D	B	Pin Ø	Load ca. in kg
ABN	80	FES	FMS	.30	13	16	8	130
ABN	100	FES	FMS	.30	16	20	10	200
ABN	120	FES	FMS	.30	16	20	10	200
ABN	135	FES	FMS	.30	18	22,5	12	250
ABN	150	FES	FMS	.30	20	25,5	13	290
ABN	180	FES	FMS	.30	20	25,5	13	290
ABN	200	FES	FMS	.30	23	29	16	350

Phone: +49 (0) 231 / 725 790 -0
Fax: +49 (0) 231 / 725 790 -10
eMail: info@hokon-verschlusstechnik.de
Homepage: www.hokon-verschlusstechnik.de

Weld on hinge rolls
Stainless steel

HoKon
VERSCHLUSSTECHNIK &
SONDERKONSTRUKTIONEN

Weld on hinge rolls „ABF“ with flat endings

FVS with fixed stainless steel pin and brass intermediate ring.

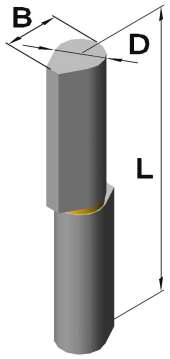

Article no.				Dimensions in mm			
Series	L	Execution	Material Stainless steel (V2A)	D	B	Pin Ø	Load ca. in kg
ABF	60	FVS	.30	10	12	6	180
ABF	80	FVS	.30	13	16	7	180
ABF	100	FVS	.30	16	20	9	260
ABF	120	FVS	.30	16	20	9	260

Weld on hinge rolls **„AB“** 3-parts

AVS with pull-out stainless steel pin and brass intermediate ring

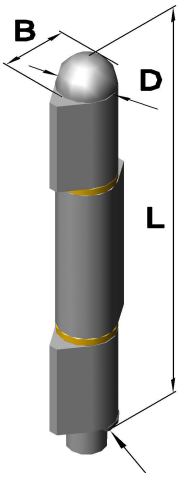

Lock washer

Article no.				Dimensions in mm			
Series	L	Execution	Material Stainless steel (V2A)	D	B	Pin Ø	Load ca. in kg
AB	135/3	AVS	.30	18	22,5	12	790
AB	150/3	AVS	.30	20	25,5	13	960
AB	180/3	AVS	.30	20	25,5	13	1300

TÜVRheinland ZERTIFIZIERT Management System ISO 9001:2015 ISO 14001:2015 www.tuv.com ID 9108624624

Further material and surface finishes on demand. We will be pleased to give you advice.

Phone: +49 (0) 231 / 725 790 -0
Fax: +49 (0) 231 / 725 790 -10
eMail: info@hokon-verschlusstechnik.de
Homepage: www.hokon-verschlusstechnik.de

Weld on hinges rolls
Stainless steel

HoKon
VERSCHLUSSTECHNIK &
SONDERKONSTRUKTIONEN

Welded joints „AG“ with fixed steel pin

FES on self-lubricating bushings stored and brass intermediate ring.

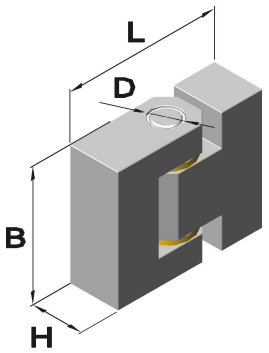

Article no.				Dimensions in mm			
Series	L	Execution	Material Stainless steel (V2A)	B	H	D	Load ca. in kg
AG	70	FES	.30	60	25	12	4000

„Horizontal and vertical adjustable“

Weld on hinge rolls „AB“
„Horizontal and vertical adjustable“

AVS with pull-out stainless steel pin

Article no.				Dimensions				
Series	L	Execution	Material Stainless steel (V2A)	D	B	Pin Ø	SW	Load ca. in kg
AB	118	AVS-3D	.30	20	25,5	12	17	-

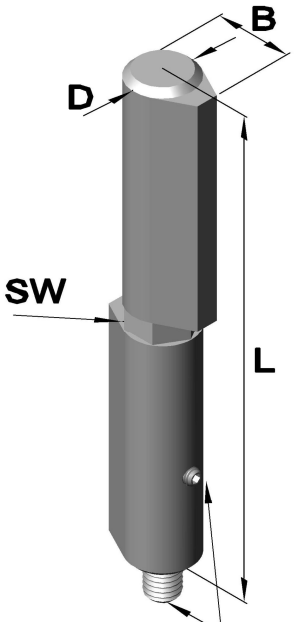

Threaded pin

Management System
ISO 9001:2015
ISO 14001:2015
TÜVRheinland ZERTIFIZIERT
www.tuv.com ID 9108624624

Further material and surface finishes on demand. We will be pleased to give you advice.
Phone: +49 (0) 231 / 725 790 -0 eMail: info@hokon-verschlusstechnik.de
Fax: +49 (0) 231 / 725 790 -10 Homepage: www.hokon-verschlusstechnik.de

Weld on hinges



Weld on hinges

Art. no.: 6071
with fixed steel bolt

Execution:
(.02)

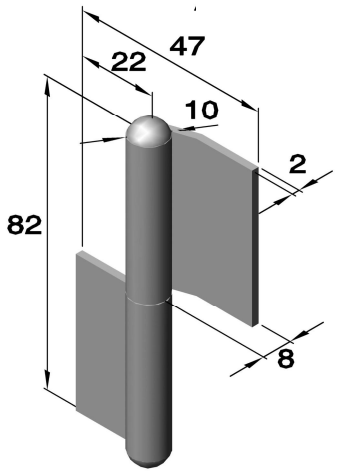

Article no.			
Series	Execution		Material
	Right	Left	Raw / Steel
6071	.01	.02	.00

Art. no.: 6072
with fixed steel bolt

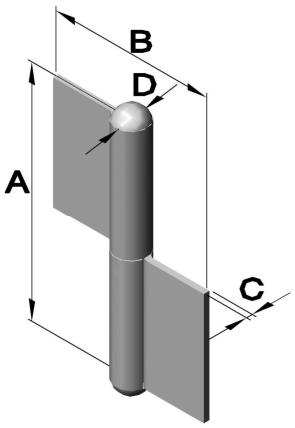

Article no.				Dimensions in mm				
Series	Execution	Material		A	B	D	C	Pin Ø
		Raw / Steel	Raw / Stainless steel					
6072	.01	.00	.30	60	40	8,3	1,5	5,3
6072	.02	.00	.30	80	50	10	2	6
6072	.05	.00	-	80	40	8,3	1,5	5,3

Art. no.: 6072
with fixed steel bolt and brass intermediate ring

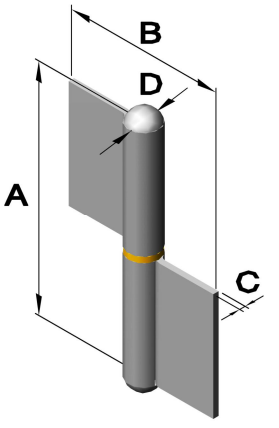

Article no.				Dimensions in mm				
Series	Execution	Material		A	B	C	D	Pin Ø
		Raw / Steel	Raw / Stainless steel					
6072	.03	.00	.30	61,5	40	1,5	8,3	5,3
6072	.04	.00	.30	81,5	50	2	10	6

Management System ISO 9001:2015 ISO 14001:2015 TÜVRheinland ZERTIFIZIERT www.tuv.com ID 9108624624

Further materials and surface finishes on demand. We will be pleased to give you advice
Phone: +49 (0) 231 / 725 790 -0 eMail: info@hokon-verschlusstechnik.de
Fax: +49 (0) 231 / 725 790 -10 Homepage: www.hokon-verschlusstechnik.de

Weld on hinges

Art. no.: 6073

with extractable steel pin and brass intermediate ring

Execution (.02)

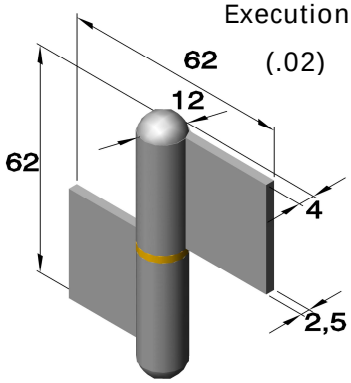

Article no.			
Series	Execution		Material
	Left	Right	Raw / Steel
6073	.01	.02	.00

Art.no: 6098

with fixed steel pin and brass intermediate ring

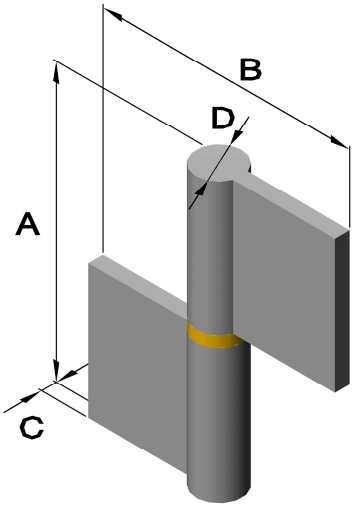

Article no.			Dimensions in mm				
Series	Execution	Material Raw / Steel	A	B	C	D	Pin Ø
6098	.01	.00	63	80	4,2	15,5	8
6098	.02	.00	83,5	80	5,1	16	8
6098	.03	.00	104	92	5,5	17	9
6098	.04	.00	124	108	6,5	19	10
6098	.05	.00	144	108	6,5	19	10

Art.no: 6099

with fixed steel pin and brass intermediate ring

Execution: (.02)

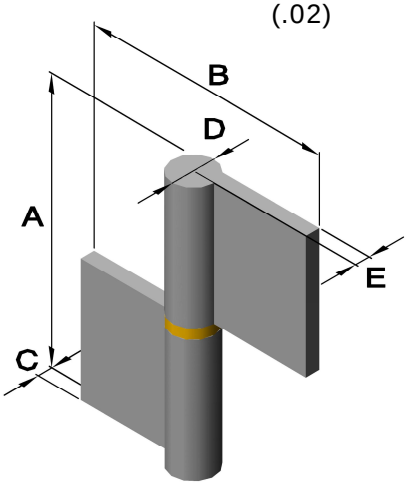

Article no.				Dimensions in mm					
Series	Execution		Raw	A	B	D	E	S	Pin Ø
	Left	Right	Steel						
6099	.02	.07	.00	83,5	63	16	5,1	5,1	8
6099	.03	.08	.00	104	92	17	5,5	5,5	9

Further materials and surface finishes on demand. We will be pleased to give you advice.
Phone: +49 (0) 231 / 725 790 -0 eMail: info@hokon-verschlusstechnik.de
Fax: +49 (0) 231 / 725 790 -10 Homepage: www.hokon-verschlusstechnik.de

Weld on hinges

Art.no: 6120
with fixed steel pin

Execution
(.01)

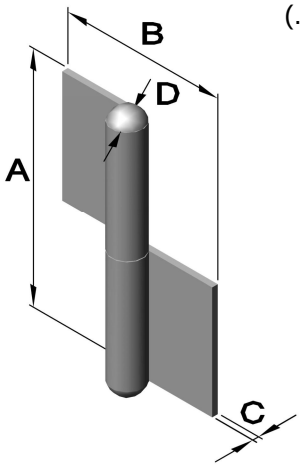

Article no.				Dimensions in mm					
Series	Execution		Material	L	B	D	E	S	Pin Ø
	Left	Right	Raw / Steel						
6120	.01	.02	.00	60	40	8,4	4,2	1,5	5,3
6120	.03	.04	.00	80	48	10	5	2	6

Art.no: 6120
with fixed steel pin and brass intermediate ring

Execution
(.05)

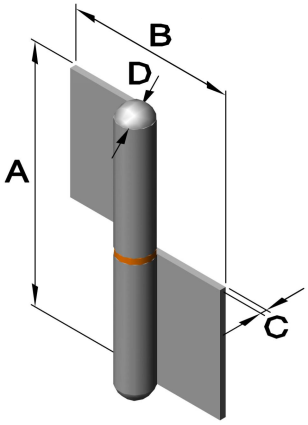

Article no.				Dimensions in mm				
Series	Execution		Material	A	B	C	D	Pin Ø
	Left	Right	Raw / Steel					
6120	.05	.06	.00	61,5	40	1,5	8,4	5,3
6120	.07	.08	.00	81,5	48	2	10	6

Art.no: F2879_(drilled and countersunk)
with welded stainless steel pin

Trade welded.

Execution
Left

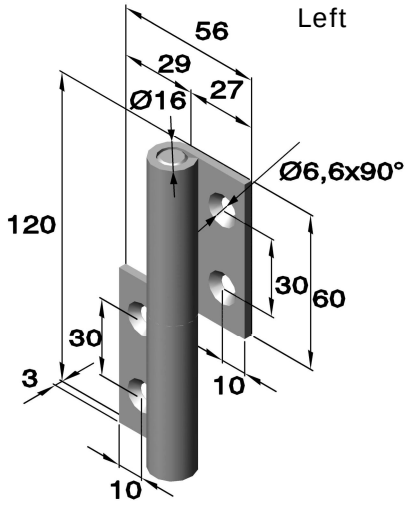

Article no.			Pin Ø
Execution		Material	
Left	Right	Raw / Stainless steel 1.4571	
F28795/F28797	F28796/F28797	.30	10

TÜVRheinland ZERTIFIZIERT Management System ISO 9001:2015 ISO 14001:2015 www.tuv.com ID 9108624624

Further materials and surface finishes on demand. We will be pleased to give you advice
Phone: +49 (0) 231 / 725 790 -0 eMail: info@hokon-verschlusstechnik.de
Fax: +49 (0) 231 / 725 790 -10 Homepage: www.hokon-verschlusstechnik.de

Weld on hinges

Art.no: 10010048 (drilled)
with stainless steel pin

Execution
(.01)

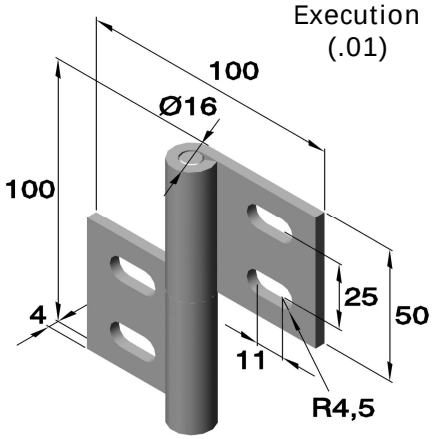

Article no.				Pin Ø
Series	Execution		Material	
	Left	Right	Raw	
			Stainless steel	
10010048	.01	.02	.30	8

Art.no: 6076
with fixed steel pin

Execution
(.01)

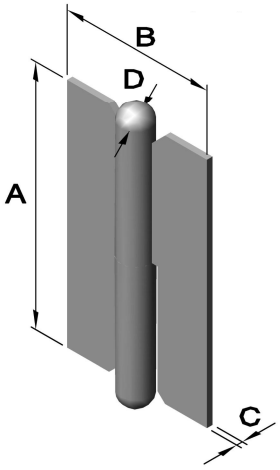

Article no.				Dimensions in mm				
Series	Execution		Material	A	B	C	D	Pin Ø
	Left	Right	Raw					
			Steel					
6076	.02	.01	.00	50	30	1,2	6,4	4
6076	.04	.03	.00	60	40	1,5	7	4

Art.no: 6077 (drilled and countersunk)
with fixed steel pin

Execution
(.01)

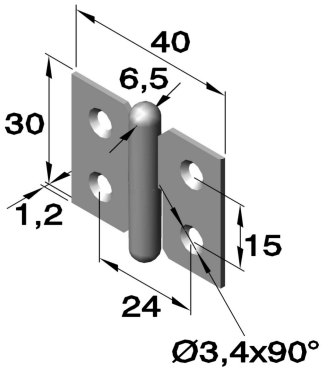

Article no.			
Series	Execution		Material
	Left	Right	Nickel plated
			Steel
6077	.02	.01	.01

Weld on hinges

Art.no: 6078 (drilled and countersunk)
with fixed steel pin

Article no.			
Series	Execution		Material
	Left	Right	Nickel plated / Steel
6078	.02	.01	.01

Execution (.01)

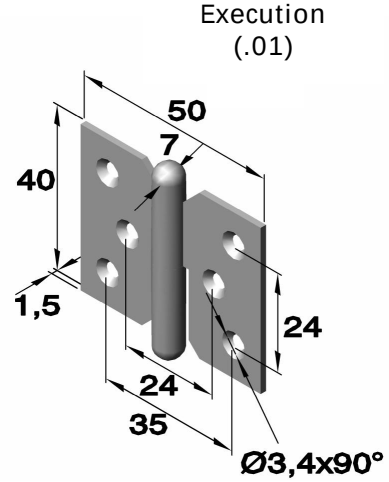

Art.no: 6079 (drilled and countersunk)
with fixed steel pin

Article no.			
Series	Execution		Material
	Left	Right	Nickel plated / Steel
6079	.01	.02	.01

Execution (.01)

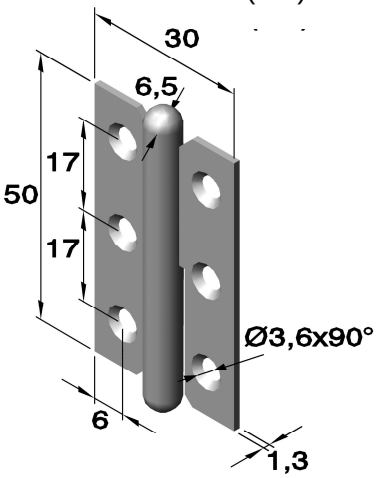

Art.no: 6080 (drilled and countersunk)
with fixed steel pin

Article no.				Dimensions in mm								
Series	Execution		Material	A	B	C	D	F	f	G	S Ø	Pin Ø
	Left	Right	Nickel plated / Steel									
6080	.02	.01	.01	60	40	1,5	7	26	29	46	3,4	4
6080	.04	.03	.01	70	45	1,5	7,5	30	33,5	54	4,5	4,5
6080	.06	.05	.01	80	50	1,5	8	31,5	35,5	62	4,5	5

Execution (.01)

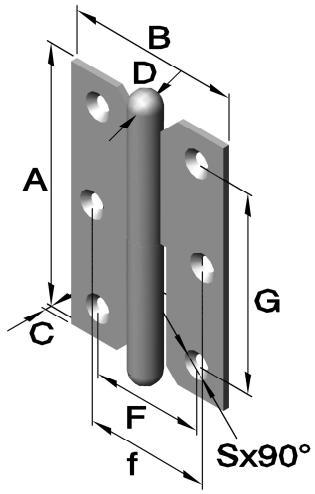

Management System ISO 9001:2015 ISO 14001:2015 TÜVRheinland ZERTIFIZIERT www.tuv.com ID 9108624624

Further materials and surface finishes on demand. We will be pleased to give you advice
Phone: +49 (0) 231 / 725 790 -0 eMail: info@hokon-verschlusstechnik.de
Fax: +49 (0) 231 / 725 790 -10 Homepage: www.hokon-verschlusstechnik.de

Weld on hinges

Art. no.: 6085 (drilled and countersunk)
with fixed, Zinc plated steel bolt and nylon coating

Article no.			
Series	Execution		Material: Anodized silver
	Left	Right	Aluminium
6085	.01	.02	.70

Execution (.01)

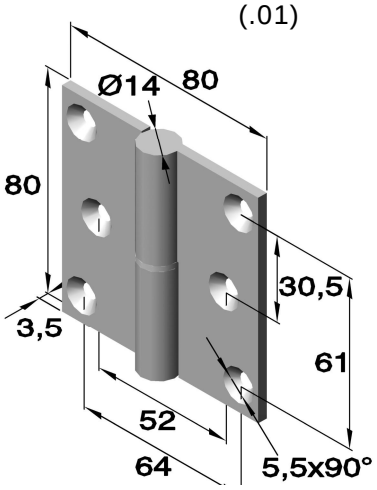

Art. no.: 6086
with fixed, zinc plated steel bolt and nylon coating,

Article no.			
Series	Execution		Material: Anodized silver
	Left	Right	Aluminium
6086	.01	.02	.70

Execution (.01)

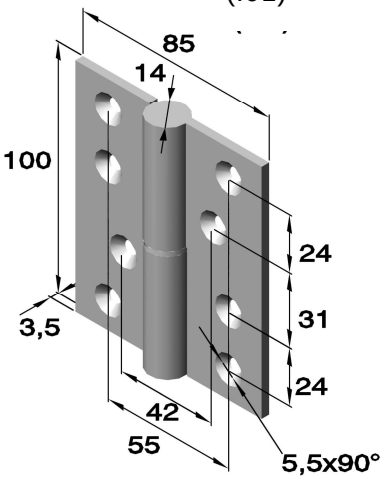

Art. no.: 6087 (drilled and countersunk)
with fixed, Zinc plated steel bolt and nylon coating,

Article no.			
Series	Execution		Material: Anodized silver
	Left	Right	Aluminium
6087	.01	.02	.70

Execution (.02)

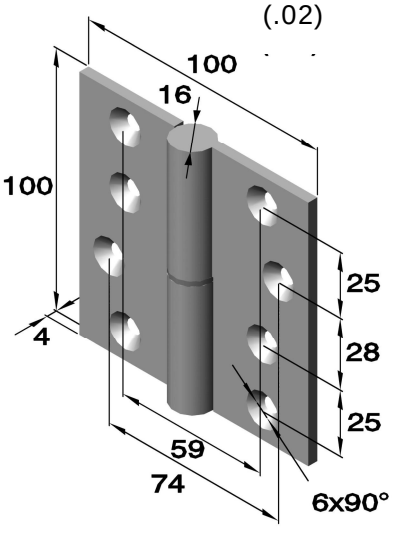

Weld on hinges

Art. no.: 6088 (drilled and countersunk)
with fixed steel bolt and steel intermediate ring

Execution (.01)

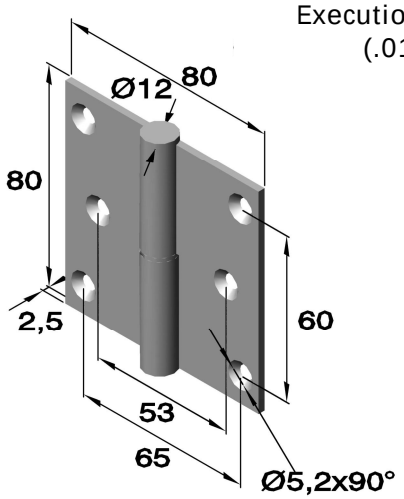

Article no.			
Series	Execution		Material
			Brushed
	Left	Right	Stainless steel
6088	.01	.02	.30

Art. no.: 6088 (drilled and countersunk)
with fixed steel bolt and steel intermediate ring

Execution (.03)

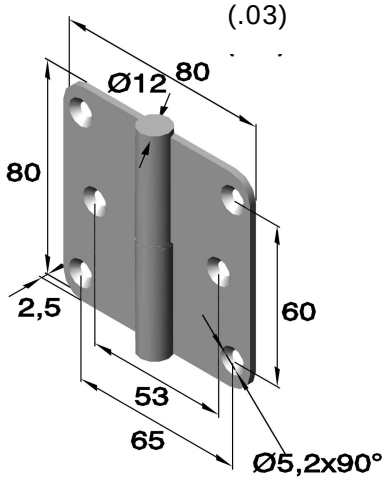

Article no.			
Series	Execution		Material
			Brushed
	Left	Right	Stainless steel
6088	.03	.04	.30

Art. no.: 6088 (drilled and countersunk)
with fixed steel bolt and steel intermediate ring

Execution (.09)

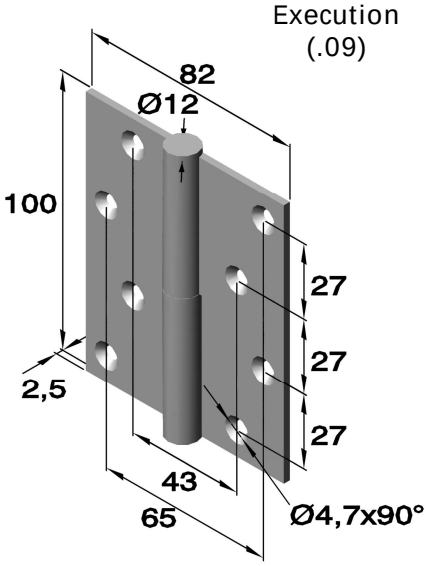

Article no.			
Series	Execution		Material
			Brushed
	Left	Right	Stainless steel
6088	.09	.10	.30

TÜVRheinland ZERTIFIZIERT Management System ISO 9001:2015 ISO 14001:2015 www.tuv.com ID 9108624624

Further materials and surface finishes on demand. We will be pleased to give you advice
Phone: +49 (0) 231 / 725 790 -0 eMail: info@hokon-verschlusstechnik.de
Fax: +49 (0) 231 / 725 790 -10 Homepage: www.hokon-verschlusstechnik.de

Weld on hinges

Art. no.: 6088 (drilled and countersunk)
with fixed steel bolt and steel intermediate ring

Execution (.11)

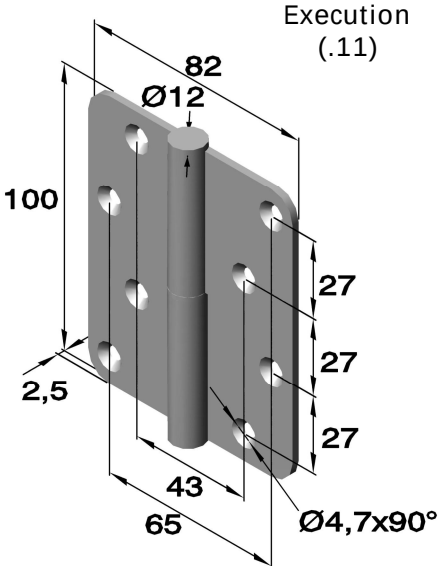

Article no.			
Series	Execution		Material
			Brushed
	Left	Right	Stainless steel
6088	.11	.12	.30

Art.no: 6125 (drilled and countersunk)
with fixed steel pin, with brass intermediate ring

Execution (.01)

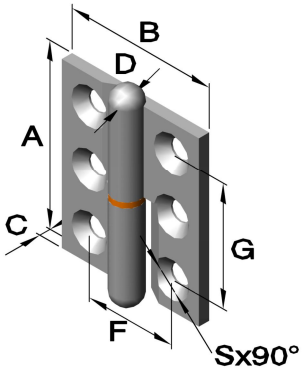

Article no.				Dimensions in mm							
Series	Execution		Material	A	B	C	D	F	G	Ø S	Pin Ø
	Left	Right	Raw / Steel								
6125	.01	.06	.00	48	40	3	8	24	32	4,5	4
6125	.02	.07	.00	60	50	3,5	10	30	40	5,5	5
6125	.03	.08	.00	72	60	4	12	36	48	6,5	6
6125	.04	.09	.00	84	70	4,5	14	42	56	7,5	7
6125	.05	.10	.00	96	80	5	16	48	66	8,5	8

Art.no: 99.40402 (drilled and countersunk)
with stainless steel pin, without intermediate ring

Execution (.AL)

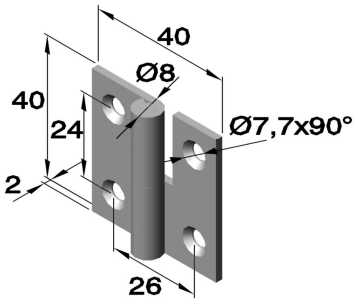

Article no.				
Series	Material	Execution		Pin Ø
	Electro polished / Stainless steel	Left	Right	
99.40402	.33	/AL	/AR	4

Weld on hinges

Art.no: 6129 (drilled)

with stainless steel pin, with intermediate ring

Execution (.01)

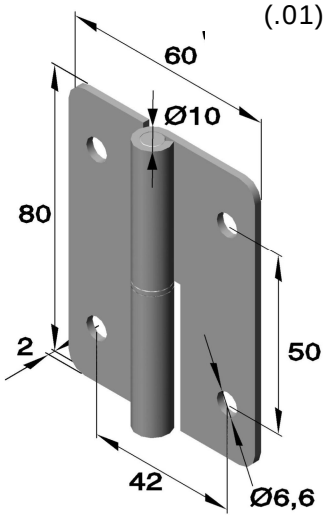

Article no.				Pin Ø
Series	Execution		Material	
	Left	Right	Raw	
			Stainless steel	
6129	.01	.02	.30	6

Art.no. 6088 (drilled and countersunk)

with spring and nylon intermediate ring

The hinge moves itself automatically
back to the initial position with an
opening angle of up to 80°.
Above 80° the spring function is cancelled.

Execution (.06)

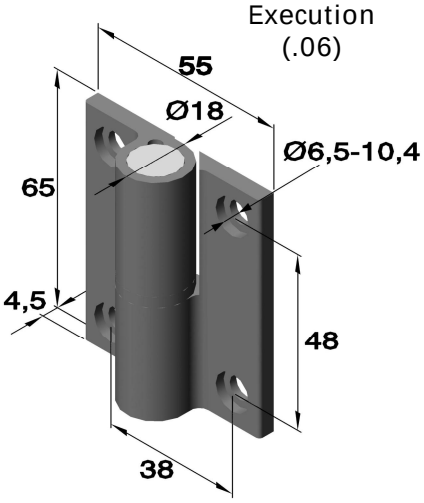

Article no.			
Series	Execution		Material
	Left	Right	Anodized
			Aluminium
6088	.05	.06	.77 Silver
6088	.07	.08	.77 Black

Art.no: 6124 (drilled and countersunk)

with stainless steel pin

Maximum load: 40kg

Execution (.01)

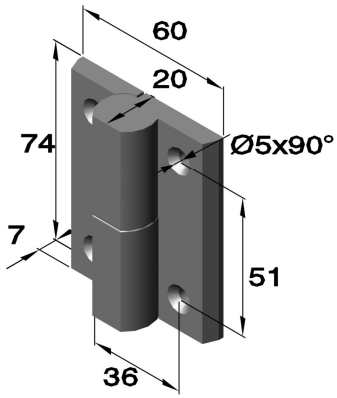

Article no.				
Series	Execution		Material	Pin Ø
	Left	Right	Raw	
			Polyamid	
6124	.01	.02	.80 Black	9,5

TÜVRheinland ZERTIFIZIERT Management System ISO 9001:2015 ISO 14001:2015 www.tuv.com ID 9108624624

Further materials and surface finishes on demand. We will be pleased to give you advice
Phone: +49 (0) 231 / 725 790 -0 eMail: info@hokon-verschlusstechnik.de
Fax: +49 (0) 231 / 725 790 -10 Homepage: www.hokon-verschlusstechnik.de

Weld on hinges

Art. no.: 6128

reinforced hinge hook bolts without intermediate ring
with internal thread

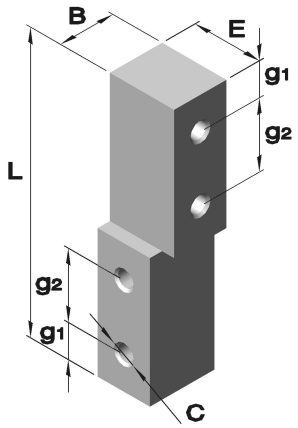

Article no.			Dimensions in mm						
Series	Execution	Material Brushed Stainless steel	L	B	C Ø	E	g1	g2	Pin Ø
6128	.04	.30	64	13	M5x6	16	8	16	6
6128	.05	.30	76	13	M6x7,5	19	10	19	6

Art. no.: 6488 (drilled and countersunk)

hinge hook bolts without intermediate ring

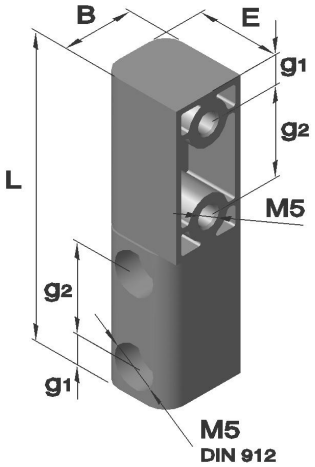

Article no.			Dimensions in mm					
Series	Execution	Material Black Zamak	L	B	E	g1	g2	Pin Ø
6488	.01	.50	63.5	15,1	17,5	6,2	19	9,5

Art. no.: 6101

with extractable brass bolt
and zinc plated brass intermediate ring

Assembly kit with screw nuts and grommets.

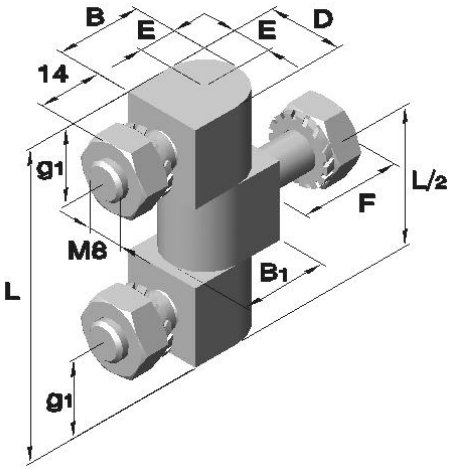

Article no.			Dimensions in mm					
Series	Execution	Material Zinc plated Steel	L	B	D	E	g1	Pin Ø
6101	.03	.04	33	18	16	8	8	8

Weld on hinges

Art.no: 6101

with extractable brass pin
and zinc plated brass intermediate ring

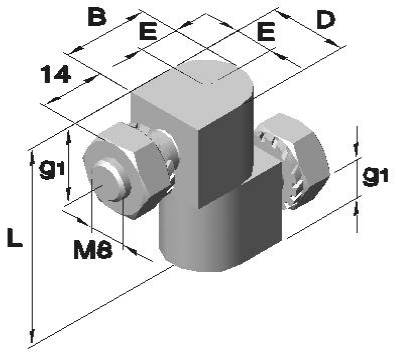

Assembly kit with screw nuts and grommets.

Article no.			Dimensions in mm					
Series	Execution	Material: Zinc plated / Steel	L	B	D	E	g1	Pin Ø
6101	.03	.04	33	18	16	8	8	8

Art. no.: 6101

with extractable steel bolt without intermediate ring

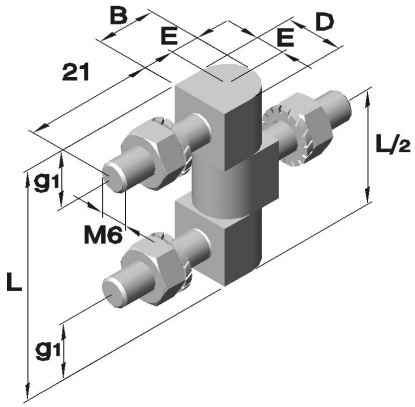

Assembly kit with screw nuts and grommets.

Article no.			Dimensions in mm					
Series	Execution	Material: Raw / Steel	L	B	D	E	g1	Pin Ø
6101	.04	.00	36	12,5	12	6	6	6

Art. no.: 6101

with extractable steel pin

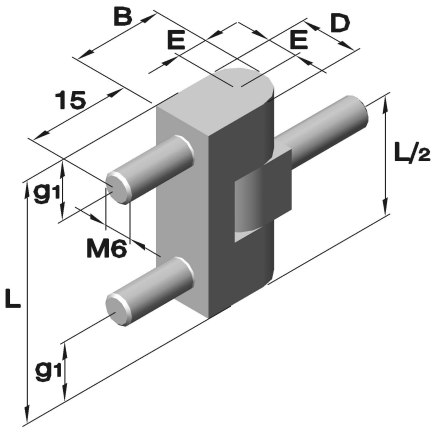

Without screw nuts and grommets.

Article no.			Dimensions in mm					
Series	Execution	Material: Raw / Steel	L	B	D	E	g1	Pin Ø
6101	.05	.00	36	18,5	12	6	6	6

TÜVRheinland ZERTIFIZIERT Management System ISO 9001:2015 ISO 14001:2015 www.tuv.com ID 9108624624

Further materials and surface finishes on demand. We will be pleased to give you advice
Phone: +49 (0) 231 / 725 790 -0 eMail: info@hokon-verschlusstechnik.de
Fax: +49 (0) 231 / 725 790 -10 Homepage: www.hokon-verschlusstechnik.de

Weld on hinges

Art. no.: 6121 (drilled)

with fixed pin

Execution
Left (.01)

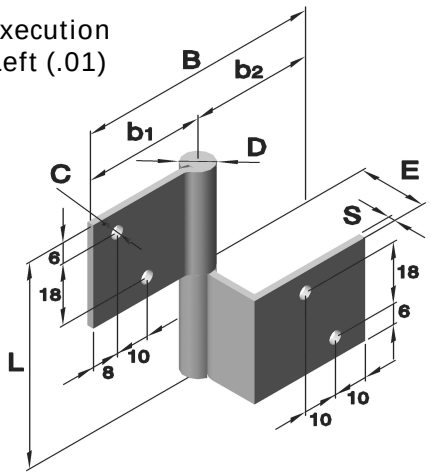

Article no.				Dimensions in mm								
Series	Execution		Material	L	B	b1	b2	C Ø	D	E	S	Pin Ø
	Left	Right	Raw / Stainless steel									
6121	.01	.02	.30	60	72	36	36	4	9	18	2	5

Weld on hinges

TÜVRheinland ZERTIFIZIERT
Management System
ISO 9001:2015
ISO 14001:2015
www.tuv.com
ID 9108624624

Further materials and surface finishes on demand. We will be pleased to give you advice
Phone: +49 (0) 231 / 725 790 -0 eMail: info@hokon-verschlusstechnik.de
Fax: +49 (0) 231 / 725 790 -10 Homepage: www.hokon-verschlusstechnik.de

Weld on hinge-rolls





Weld on hinge-rolls

ABR	weld on hinge rolls with round ends
ABF	weld on hinge rolls with flat ends
AB	weld on hinge rolls 3-parts
ABN	weld on hinge rolls with grease nipple
AK	weld on ball pin
AG	weld on joint

Material:

.00	raw steel
.30	raw stainless steel (V2A)
.35	raw stainless steel (V4A)
.70	raw aluminium

Execution and finishing of the pins:

FES	with fixed steel pin.
AES	with extractable steel pin.
FMS	with fixed brass pin.
AMS	with extractable brass pin.
FVS	with fixed stainless steel pin.
AVS	with extractable stainless steel pin.

Ordering example:

Art.no. ABR 100 FES .00/.30/.35/.70

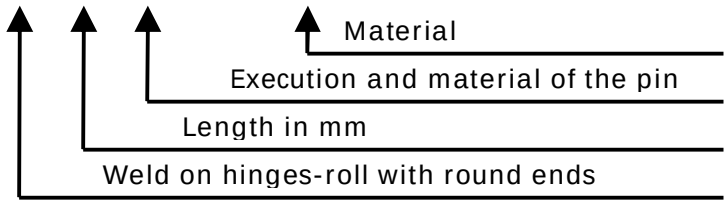

TÜVRheinland ZERTIFIZIERT Management System ISO 9001:2015 ISO 14001:2015 www.tuv.com ID 9108624624

Further materials and surface finishes on demand. We will be pleased to give you advice.
Phone: +49 (0) 231 / 725 790 -0 eMail: info@hokon-verschlusstechnik.de
Fax: +49 (0) 231 / 725 790 -10 Homepage: www.hokon-verschlusstechnik.de

Weld on hinge-rolls

Weld on hinge-rolls „ABR“ with round ends

FES with fixed steel pin and brass-intermediate ring
FMS with fixed brass pin and brass-intermediate ring

Article no.					Dimensions in mm			
Series	L	Execution		Material Raw Steel	D	B	Pin Ø	Load capacity ca. in kg
ABR	40	FES	FMS	.00	8	10	5	65
ABR	50	FES	FMS	.00	8	10	5	65
ABR	60	FES	FMS	.00	10	12	6	80
ABR	70	FES	FMS	.00	10	12	6	80
ABR	80	FES	FMS	.00	13	16	8	130
ABR	90	FES	FMS	.00	13	16	8	130
ABR	100	FES	FMS	.00	16	20	10	200
ABR	120	FES	FMS	.00	16	20	10	200
ABR	135	FES	FMS	.00	18	22,5	12	250
ABR	150	FES	FMS	.00	20	25,5	13	290
ABR	180	FES	FMS	.00	20	25,5	13	290
ABR	200	FES	FMS	.00	23	29	16	350

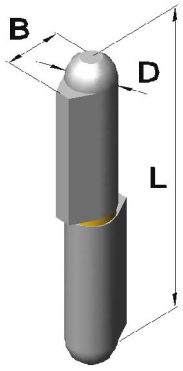

Weld on hinge-rolls „ABR“ with round ends
AES with extractable steel pin and brass-intermediate ring
AMS with extractable brass pin and brass-intermediate ring

Article no.					Dimensions in mm			
Series	L	Execution		Material Raw Steel	D	B	Pin Ø	Load capacity ca. in kg
ABR	40	AES	AMS	.00	8	10	5	50
ABR	50	AES	AMS	.00	8	10	5	50
ABR	60	AES	AMS	.00	10	12	6	80
ABR	80	AES	AMS	.00	13	16	8	100
ABR	100	AES	AMS	.00	16	20	10	180
ABR	120	AES	AMS	.00	16	20	10	180
ABR	135	AES	AMS	.00	18	22,5	12	200
ABR	150	AES	AMS	.00	20	25,5	13	240
ABR	180	AES	AMS	.00	20	25,5	13	240
ABR	200	AES	AMS	.00	23	29	16	300

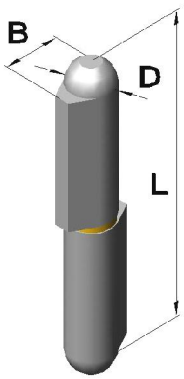

Weld on hinge-rolls

Weld on hinge-rolls „ABR“ with round ends

FVS with fixed stainless steel pin and stainless steel intermediate ring.
AVS with extractable stainless steel pin and stainless steel intermediate ring.

Article no.					Dimensions in mm			
Series	L	Execution		Material Raw Stainless steel (V2A)	D	B	d	Load capacity ca. in kg
ABR	40	FVS	-	.30	8	10	5	130
ABR	50	FVS	-	.30	8	10	5	130
ABR	60	FVS	AVS	.30	10	12	6	180
ABR	80	FVS	AVS	.30	13	16	8	260
ABR	90	FVS	-	.30	13	16	8	260
ABR	100	FVS	AVS	.30	16	20	10	310
ABR	120	FVS	AVS	.30	16	20	10	310
ABR	135	FVS	-	.30	18	22,5	12	350
ABR	150	FVS	AVS	.30	20	25,5	13	400
ABR	180	FVS	AVS	.30	20	25,5	13	500

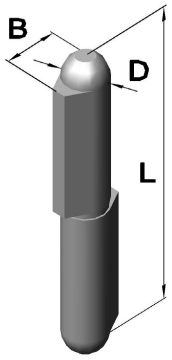

Article no.				Dimensions in mm			
Series	L	Execution	Material Raw Stainless steel (V4A)	D	B	d	Load capacity ca. in kg
ABR	60	FVS	.35	13	16	8	160
ABR	80	FVS	.35	13	16	8	260
ABR	100	FVS	.35	16	20	10	400
ABR	120	FVS	.35	16	20	10	400
ABR	150	FVS	.35	20	25,5	13	580
ABR	180	FVS	.35	20	25,5	13	580

Weld on hinge-rolls „ABR“ with round ends

FVS with fixed stainless steel pin and brass intermediate ring.
AVS with extractable stainless steel pin and brass intermediate ring.

Article no.					Dimensions in mm			
Series	L	Execution		Material Raw Aluminium	D	B	d	Load capacity ca. in kg
ABR	60	FVS	AVS	.70	10	12	6	50
ABR	80	FVS	AVS	.70	13	16	8	70
ABR	100	FVS	-	.70	16	20	10	100
ABR	120	FVS	AVS	.70	16	20	10	120
ABR	150	FVS	-	.70	20	25,5	13	150
ABR	180	FVS	-	.70	20	25,5	13	170

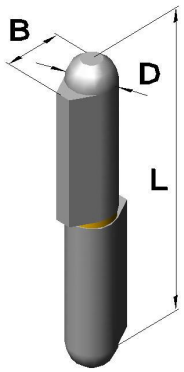

Management System ISO 9001:2015 ISO 14001:2015 TÜVRheinland ZERTIFIZIERT www.tuv.com ID 9108624624

Further materials and surface finishes on demand. We will be pleased to give you advice.
Phone: +49 (0) 231 / 725 790 -0 eMail: info@hokon-verschlusstechnik.de
Fax: +49 (0) 231 / 725 790 -10 Homepage: www.hokon-verschlusstechnik.de

Weld on hinge-rolls

Weld on hinge-rolls „ABR“ with round ends

FES with fixed steel pin and ball bearing

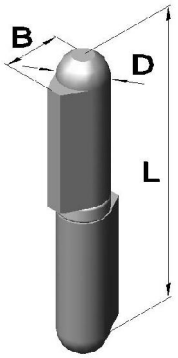

Article no.				Dimensions in mm			
Series	L	Execution	Material Raw Steel	D	B	Pin Ø	Load capacity ca. in kg
ABR	141	FES	.00	18	22,5	12	250
ABR	155.5	FES	.00	20	25,5	13	290
ABR	206	FES	.00	23	29	16	350

Weld on hinge-rolls „ABN“ with round ends and grease nipple

FES with fixed steel pin and brass intermediate ring

FMS with fixed brass pin and brass intermediate ring

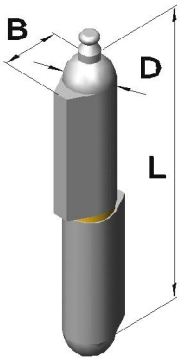

Article no.					Dimensions in mm			
Series	L	Execution		Material Raw Steel	D	B	Pin Ø	Load capacity ca. in kg
ABN	60	FES	FMS	.00	10	12	6	80
ABN	80	FES	FMS	.00	13	16	8	130
ABN	100	FES	FMS	.00	16	20	10	200
ABN	120	FES	FMS	.00	16	20	10	200
ABN	135	FES	FMS	.00	18	22,5	12	250
ABN	150	FES	FMS	.00	20	25,5	13	290
ABN	180	FES	FMS	.00	20	25,5	13	290
ABN	200	FES	FMS	.00	23	29	16	350

Weld on hinge rolls „ABN“ with round ends and grease nipple

FVS with fixed stainless steel pin and stainless steel intermediate ring.

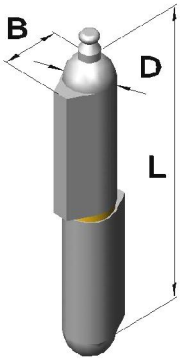

Article no.				Dimensions in mm			
Series	L	Execution	Material Raw Stainless steel (V2A)	D	B	d	Load capacity ca. in kg
ABN	60	FVS	.30	13	16	8	160
ABN	80	FVS	.30	13	16	8	260
ABN	100	FVS	.30	16	20	10	400
ABN	120	FVS	.30	16	20	10	400
ABN	135	FVS	.30	20	25,5	13	500
ABN	150	FVS	.30	20	25,5	13	580
ABN	180	FVS	.30	20	25,5	13	580

Weld on hinge-rolls

Weld on hinge-rolls „ABS“ with round ends

AES with extractable steel pin and brass intermediate ring.
AMS with extractable steel pin and brass intermediate ring.

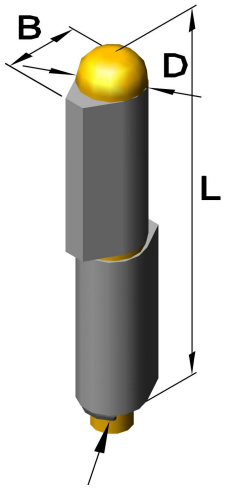

Lock washer

Article no.					Dimensions in mm			
Series	L	Execution		Material Raw Steel	D	B	Pin Ø	Load capacity ca. in kg
ABS	40	AES	AMS	.00	8	10	5	50
ABS	50	AES	AMS	.00	8	10	5	50
ABS	60	AES	AMS	.00	10	12	6	80
ABS	80	AES	AMS	.00	13	16	8	100
ABS	100	AES	AMS	.00	16	20	10	180
ABS	120	AES	AMS	.00	16	20	10	180
ABS	135	AES	AMS	.00	18	22,5	12	200
ABS	150	AES	AMS	.00	20	25,5	13	240
ABS	180	AES	AMS	.00	20	25,5	13	240
ABS	200	AES	AMS	.00	23	29	16	300

Weld on hinge rolls „ABS“ with round ends

AVS with extractable stainless steel pin and stainless steel intermediate ring.

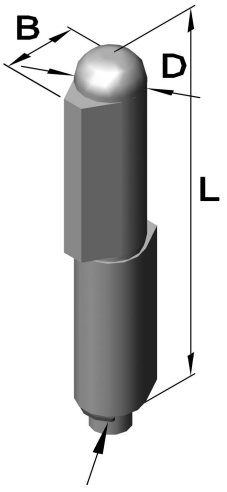

Lock washer

Article no.				Dimensions in mm			
Series	L	Execution	Material Raw Stainless steel (V2A)	D	B	d	Load capacity ca. in kg
ABN	60	AVS	.30	13	16	8	80
ABN	80	AVS	.30	13	16	8	100
ABN	100	AVS	.30	16	20	10	180
ABN	120	AVS	.30	16	20	10	180
ABN	150	AVS	.30	20	25,5	13	240
ABN	180	AVS	.30	20	25,5	13	240

TÜVRheinland ZERTIFIZIERT Management System ISO 9001:2015 ISO 14001:2015 www.tuv.com ID 9108624624
Further materials and surface finishes on demand. We will be pleased to give you advice.
Phone: +49 (0) 231 / 725 790 -0 eMail: info@hokon-verschlusstechnik.de
Fax: +49 (0) 231 / 725 790 -10 Homepage: www.hokon-verschlusstechnik.de

Weld on hinge-rolls

Weld on hinge rolls „ABF“ with flat ends

FES with fixed steel pin and brass intermediate ring
FMS with fixed brass pin and brass intermediate ring

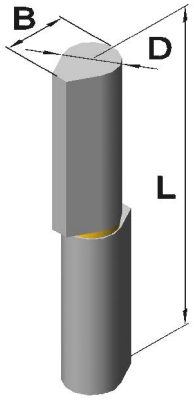

Article no.					Dimensions in mm			
Series	L	Execution		Material Raw Steel	D	B	Pin Ø	Load capacity ca. in kg
ABF	45	FES	FMS	.00	8	10	5	65
ABF	60	FES	FMS	.00	10	12	6	80
ABF	80	FES	FMS	.00	13	16	7	80
ABF	100	FES	FMS	.00	16	20	9	130
ABF	120	FES	FMS	.00	16	20	9	130
ABF	140	FES	FMS	.00	20	25,5	11	200
ABF	200	FES	-	.00	23	29	16	350

Weld on hinge rolls „ABF“ with flat ends

FVS with fixed stainless steel pin and brass intermediate ring.

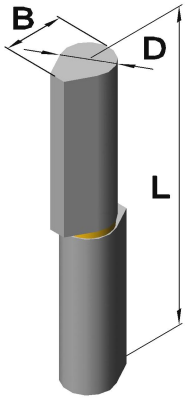

Article no.				Dimensions in mm			
Series	L	Execution	Material Raw Stainless steel (V2A)	D	B	Pin Ø	Load capacity ca. in kg
ABF	60	FVS	.30	10	12	6	180
ABF	80	FVS	.30	13	16	7	180
ABF	100	FVS	.30	16	20	9	260
ABF	120	FVS	.30	16	20	9	260

Weld on hinge rolls „ABF“ with flat ends

FES with fixed steel pin and ball bearing

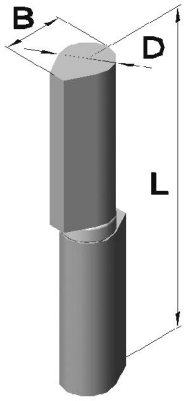

Article no.				Dimensions			
Series	L	Execution	Material Raw Steel	D	B	Pin Ø	Load capacity ca. in kg
ABF	84	FES	.00	13	16	7	80
ABF	104	FES	.00	16	20	9	130

Weld on hinge-rolls

HoKon
VERSCHLUSSTECHNIK &
SONDERKONSTRUKTIONEN

Weld on hinge-rolls „AB“ 3-parts

AES with extractable steel pin and brass intermediate ring
AMS with extractable brass pin and brass intermediate ring

article no.					dimensions in mm			
series	L	execution		material raw steel	D	B	pin Ø	load capacity ca. in kg
AB	135/3	AES	AMS	.00	18	22,5	12	790
AB	150/3	AES	AMS	.00	20	25,5	13	960
AB	180/3	AES	AMS	.00	20	25,5	13	1300
AB	200/3	AES	AMS	.00	23	29	16	2000

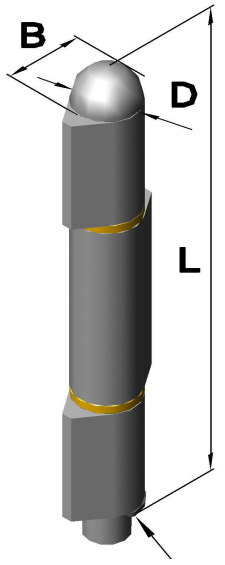

Lock washer

Weld on hinge rolls „AB“ 3- parts

AVS with extractable stainless steel pin and brass intermediate ring

Article no.				Dimensions in mm			
Art.	L	Execution	Material V2A	D	B	Pin Ø	Load capacity ca. in kg
AB	135/3	AVS	.30	18	22.5	12	790
AB	150/3	AVS	.30	20	25.5	13	960
AB	180/3	AVS	.30	20	25.5	13	1300

Weld on hinge-rolls „AB“ 3-parts with grease nipple

AMS with extractable brass pin and brass intermediate ring

Article no.				Dimensions in mm			
Series	L	Execution	Material Raw Steel	D	B	Pin Ø	Load capacity ca. in kg
ABN	135/3	AMS	.00	18	22,5	12	790
ABN	150/3	AMS	.00	20	25,5	13	960
ABN	180/3	AMS	.00	20	25,5	13	1300
ABN	200/3	AMS	.00	23	29	16	2000

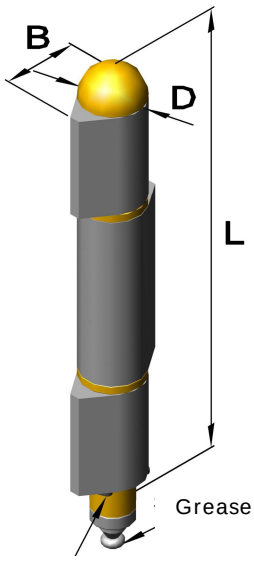

Grease nipple
Lock washer

TÜVRheinland ZERTIFIZIERT Management System ISO 9001:2015 ISO 14001:2015 www.tuv.com ID 9108624624

Further materials and surface finishes on demand. We will be pleased to give you advice.
Phone: +49 (0) 231 / 725 790 -0 eMail: info@hokon-verschlusstechnik.de
Fax: +49 (0) 231 / 725 790 -10 Homepage: www.hokon-verschlusstechnik.de

Weld on hinge-rolls

Weld on hinge rolls „AB“ 3 parts with 2 ball bearings

AES with extendable steel pin and 2 ball bearings
AMS with extendable brass pin and 2 ball bearings

Article no.					Dimensions in mm			
Series	L	Execution		Material Raw Steel	D	B	Pin Ø	Load capacity ca. in kg
AB	90/3	AES	AMS	.00	20	25,5	12	900
AB	110/3	AES	AMS	.00	23	29	13	1000

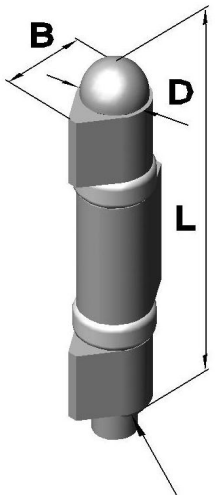

Lock washer

Weld on joints „AG“ With fixed steel pin

FES stored on self greased sleeves and brass intermediate ring.

Article no.					Dimensions in mm			
Series	L	Execution	Material Raw		B	H	D	Load capacity ca. in kg
			Steel	Stainless steel (V2A)				
AG	60	FES	.00	-	50	20	10	1000
AG	70	FES	.00	.30	60	25	12	4000
AG	80	FES	.00	-	60	30	15	5000
AG	100	FES	.00	-	80	40	20	9000
AG	120	FES	.00	-	100	50	25	10000
AG	140	FES	.00	-	120	60	30	10000+

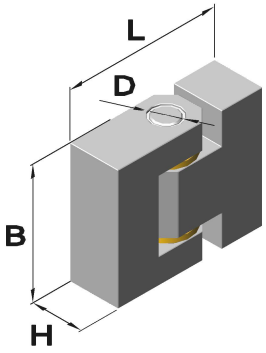

Weld on plug „AK“

AES with extractable steel pin and ball bearing

Article no.				Dimensions in mm			
Series	L	Execution	Material Raw Steel	B	H	D	Load capacity ca. in kg
AK	115	AES	.00	30	63	10	-

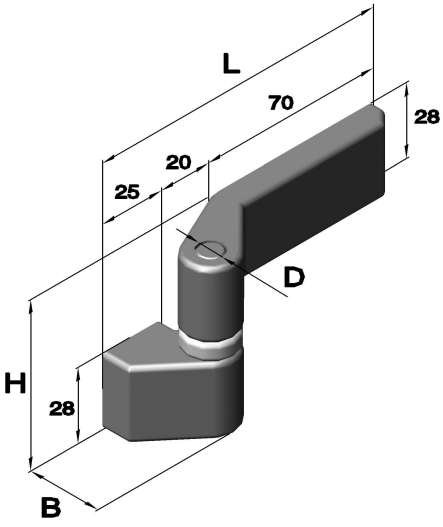

Weld on hinge-rolls

„Adjustable size and width“

Weld on hinge rolls „AB“
„Adjustable size and width“

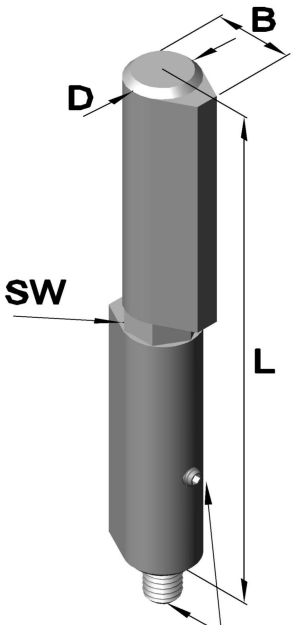

AES with extractable steel pin
AMS with extractable brass pin

Article no.					Dimensions in mm				
Series	L	Execution		Material Raw Steel	D	B	Pin Ø	SW	Load capicity ca in kg
AB	118	AES-3D	AMS-3D	.00	20	25,5	12	17	-
AB	147	AES-3D	AMS-3D	.00	23	28,5	12	17	-

AVS with extractable steel pin

Article no.				Dimensions in mm				
Series	L	Execution	Material Raw Stainless steel (V2A)	D	B	Pin Ø	SW	Load capacity ca in kg
AB	118	AVS-3D	.30	20	25,5	12	17	-

grub screw

„With adjustable spring“

Art.no. 158.I-5___.__ (spring force adjustable)

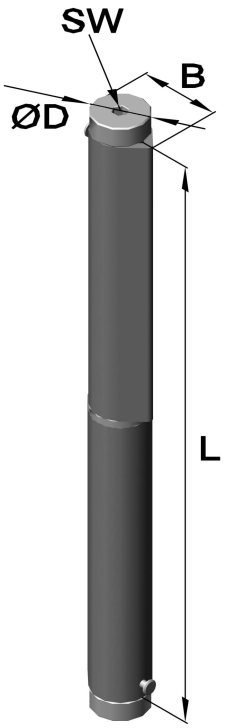

with integrated spring

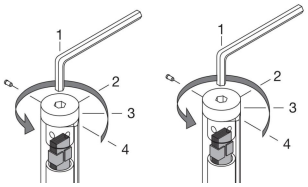

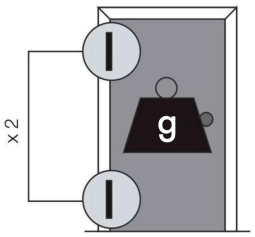

Article no.			Dimensions in mm				Loading capacity in kg
Series	Material Raw Steel	Stainless steel (V2A)	L	B	SW	ØD	g
158.I-5524	.00	.05.30	120	21	5	18	20
158.I-5324	.00	.05.30	180	21	5	18	40
158.I-5124	.00	.05.30	235	26	5	22	60

This product will be delivered only in pairs.
Close doors automatically, integrated mechanic is very tough and adjustable.
Max. aperture angle 180°.

TÜVRheinland ZERTIFIZIERT Management System ISO 9001:2015 ISO 14001:2015 www.tuv.com ID 9108624624

Further materials and surface finishes on demand. We will be pleased to give you advice.
Phone: +49 (0) 231 / 725 790 -0 eMail: info@hokon-verschlusstechnik.de
Fax: +49 (0) 231 / 725 790 -10 Homepage: www.hokon-verschlusstechnik.de

Weld on hinge-rolls

Art.no. 158.I-5___.__(spring force adjustable)

with integrated spring, with ball bearing

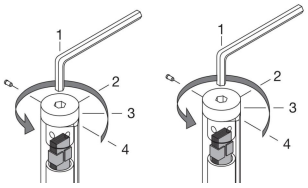

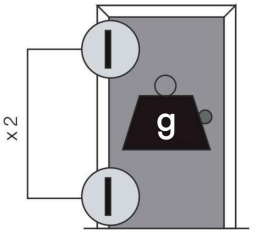

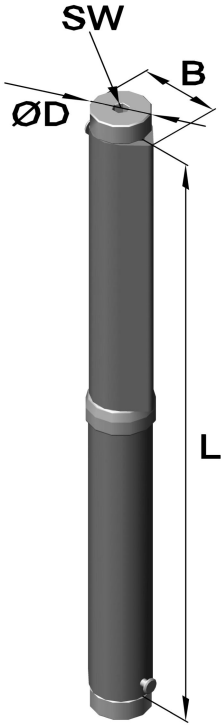

Article no.			Dimensions in mm				Loading capacity in kg
Series	Material		L	B	SW	ØD	g
	Raw						
	Steel	Stainless steel (V2A)					
158.I-5334	.00	.05.30	180	21	5	18	60
158.I-5134	.00	.05.30	235	26	5	22	120

This product will be delivered only in pairs.
Close doors automatically, integrated mechanic is very tough and adjustable.
Max. aperture angle 180°.

Hinges for fire protection doors

Art.no. 158.I-5224.__ (spring force adjustable)

with integrated spring

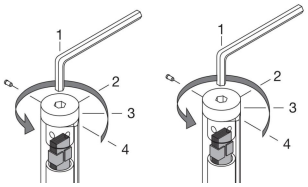

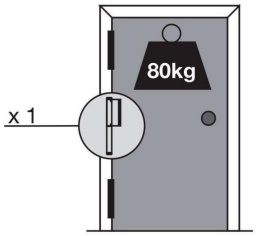

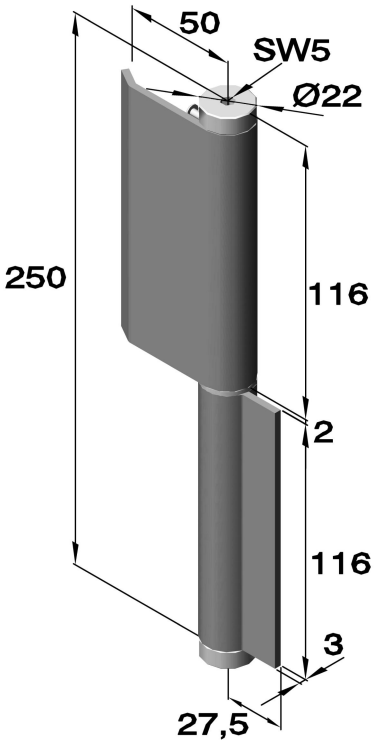

Article no.	
Series	Material
	Raw
	Steel
158.I-5224	.00

This product will be delivered only in pairs.
Close doors automatically,
Integrated mechanic is very tough and adjustable.
Max. aperture angle 180°.

Weld on hinge-rolls

TÜVRheinland ZERTIFIZIERT
Management System
ISO 9001:2015
ISO 14001:2015
www.tuv.com
ID 9108624624

Further materials and surface finishes on demand. We will be pleased to give you advice.
Phone: +49 (0) 231 / 725 790 -0 eMail: info@hokon-verschlusstechnik.de
Fax: +49 (0) 231 / 725 790 -10 Homepage: www.hokon-verschlusstechnik.de

HoKon

VERSCHLUSSTECHNIK &
SONDERKONSTRUKTIONEN

Zertifiziert nach DIN EN ISO 9001:2008



Turning lock

Hood catch

Hasps

Locking

Quarter turn fasteners

TÜVRheinland®
ZERTIFIZIERT
Management System
ISO 9001:2015
ISO 14001:2015
www.tuv.com
ID 9108624624



FOLDER 5 LOCKING DEVICES

FOLDER 1 LATCHES

FOLDER 2 TENSION BANDS

FOLDER 3 HANDLES

FOLDER 4 HINGES

FODLER 5 LOCKING DEVICES.....

QUARTER TURNS.....J-1

„CAMLOC“.....

LOCKING DEVICES.....H

- LOCKING DEVICES AND MECHANICAL CATCH.....H-1
- HASPS.....H-20
- MAGNETIC CATCHES.....H-25

HOOD CATCHES.....I-10

FOLDER 6 THREADED INSERTS

FOLDER 7 SUNDRIES

GENERAL TERMS AND CONDITIONS.....

Phone: +49 (0) 231 / 725 790 -0 eMail: info@hokon-verschlusstechnik.de
Fax: +49 (0) 231 / 725 790 -10 Homepage: www.hokon-verschlusstechnik.de

Quarter turns











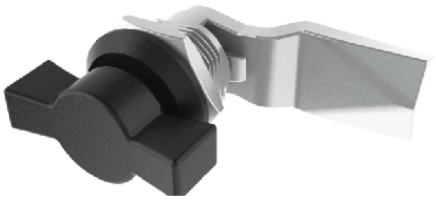



Quarter turns

Quarter-turns have been inserted in the most varied technical ranges, because of their qualitative characteristics, as for example a certified degree of protection IP 65 according to IEC 529 or DIN 40 050, certified corrosion resistance according to DIN 50 958 and coulometrically certified chromate thickness according to DIN 50 955.

Running controls of the zinc die-cast structure guarantee a homogenous and cavity-free cast iron and with it an unusually high tear-strength of the housing head.

Quarter turns are already being used in the following ranges:

Climate and ventilation technologies, switchyard and electronic control system, measuring and control technology, machine construction (noise insulation, hydraulics, pneumatics, protecting coverings), IT equipment, vehicle construction, construction of tools and apparatuses

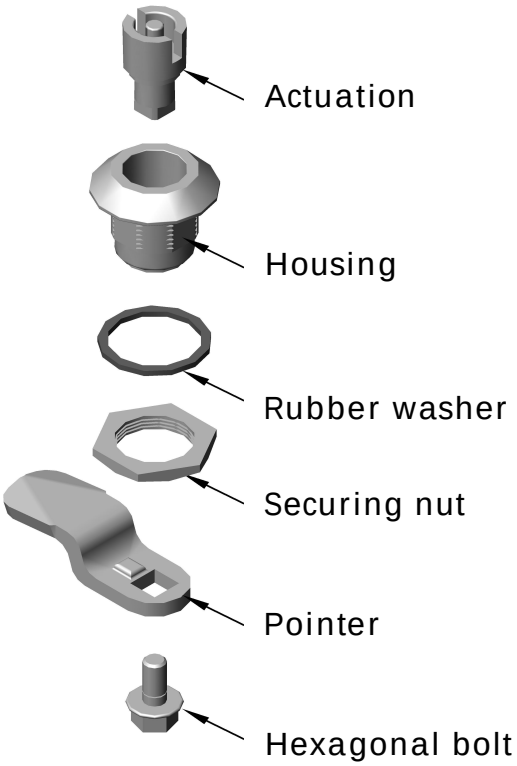

	GD-Zn A14 Cu1	Abbreviation
tensile strength	28-35	kp/mm²
ultimate strain	2-5	%
flexural impact strength	7-11	cmkp/mm²
shear strength	25-29	kp/mm²
compression strength	58-65	kp/mm²
melting range	380-386	°C
heat conductivity	0.22-0.24	cal/cm sec °C
electrical conductivity	15-16	m/Ohm mm²
elasticity modulus	13000	kp/mm²
linear coefficient of expansion	0.000027	pro °C from 20 up to 100°C

Ordering example:

Art.no. BDB3 / DG32 / ZH18

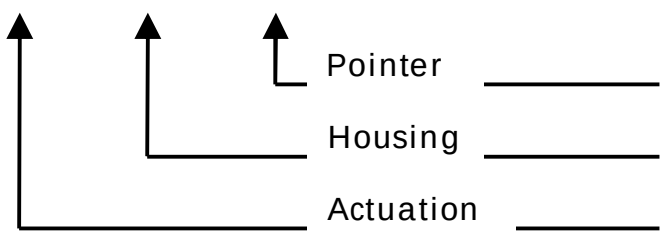

TÜVRheinland ZERTIFIZIERT Management System ISO 9001:2015 ISO 14001:2015 www.tuv.com ID 9108624624

Further material and surface finishes on demand. We will be pleased to give you advice.
Phone: +49 (0) 231 / 725 790 -0 eMail: info@hokon-verschlusstechnik.de
Fax: +49 (0) 231 / 725 790 -10 Homepage: www.hokon-verschlusstechnik.de

Quarter turns

Mini turning lock key

Article no.		Dimensions in mm		
Series	material			
	Zamak	A	B	L
for square operating „BVK“				
SVK 6	black	□6,2	34	55
for triangular operating „BDK“				
SDK 6,5	black	Δ6,5	34	55

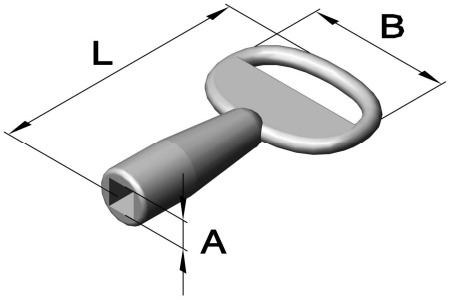

Clip mini turning lock „CD“

Closing stroke 90°

For sheet thickness 0,8-1,5mm

Off 2000 articles on request.

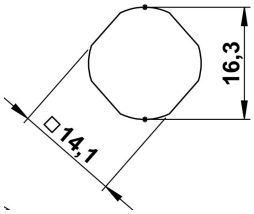

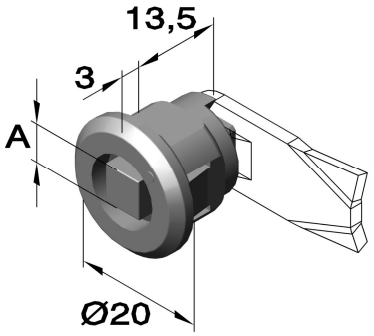

Please complement the art no. for the switch (Art.no. MZH)

Article no.			Material	Dimensions in mm
			Black	
Series	Actuation	Switch	Plastic	A
CDG-20	/ BVK 6 /	no. complement	.87	□6
CDG-20	/ BDK 6 /	no. complement	.87	Δ6,5
CDG-20	/ BS /	no. complement	.87	1,5

Mini turning lock „DG“

Closing stroke 90°

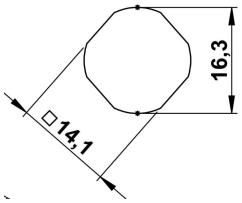

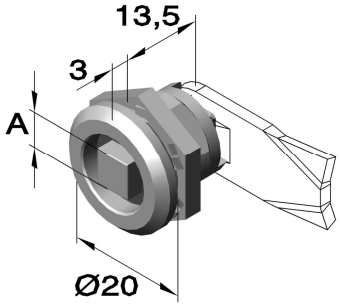

Please complement the art no. for the switch (art.no. MZH)

Article no.				Material				Dimensions in mm
				Zamak		Stainless steel	Plastic	
Series	Execution	Actuation	Switch	Chrome plated	Black coated		Black	A
DG-20	.01	/ BVK 6 /	no. complement	.53	.57	.30	.87	□6
DG-20	.01	/ BDK 6 /	no. complement	.53	.57	.30		Δ6,5
DG-20	.01	/ BS	no. complement	.53	.57	.30	.87	Δ6,5

Quarter turns

Mini wing turning lock „FD“

Closing stroke 90°

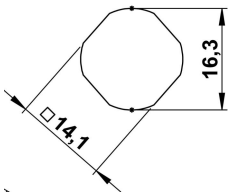

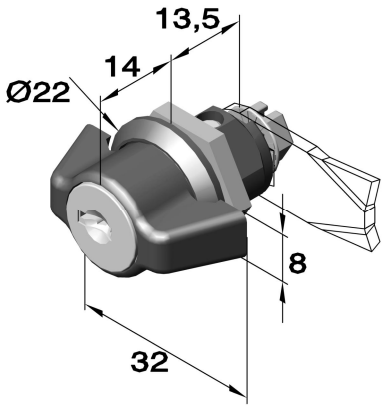

Please complement the art no. for the switch (Art.no. MZH)

Article no.				Closure
Series	Execution	Material		
		Zamak		
		Chrome plated	Black	
FD-32	- 00	.53	.57	without key
FD-32	- 01	.53	.57	simultaneos locking (with resemble keys)
FD-32	- 02	.53	.57	different locking (with different keys)

Mini switch „MZH“

closing stroke 90°

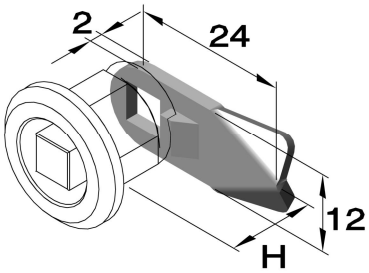

Please complement the art no. for the switch (Art.no. MZH)

Article no.		Dimensions in mm
Series	Material	H
	Steel	
	Zinc plated	
MZH 7,5-24	.04	7,5
MZH 13,5-24	.04	13,5
MZH 19,5-24	.04	19,5

TÜVRheinland ZERTIFIZIERT Management System ISO 9001:2015 ISO 14001:2015 www.tuv.com ID 9108624624

Further material and surface finishes on demand. We will be pleased to give you advice.
Phone: +49 (0) 231 / 725 790 -0 eMail: info@hokon-verschlusstechnik.de
Fax: +49 (0) 231 / 725 790 -10 Homepage: www.hokon-verschlusstechnik.de

Quarter turns

Mini turning lock lockable „DA“

Closing stroke 90°

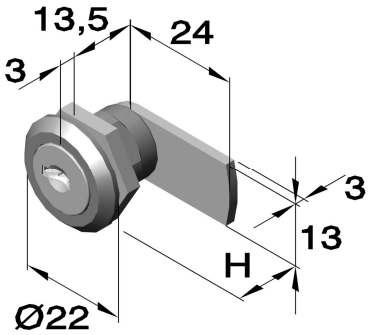

Article no.				Dimensions in mm	Closure
Series	Execution	Material			
		Chrome plated	Black	H	
		Zamak	Plastic		
DA 22	-01	.53	.87	7,5	simultaneous locking (with resemble keys)
DA 22	-02	.53	.87	13,5	simultaneous locking (with resemble keys)
DA 22	-03	.53	.87	19,5	simultaneous locking (with resemble keys)
DA 22	- 04	.53	.87	7,5	different locking (with different keys)
DA 22	- 05	.53	.87	13,5	different locking (with different keys)
DA 22	- 06	.53	.87	19,5	different locking (with different keys)

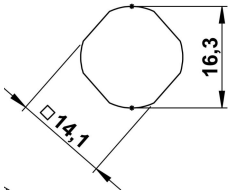

Mini turning lock lockable „DA 22F“

Closing stroke 90°

Off 100 articles on request.

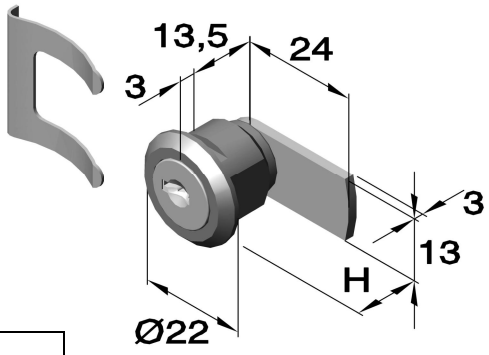

Article no.			Dimensions in mm	Closure
Series	Execution	Material		
		Chrome plated	H	
		Zamak		
DA 22F	-01	.53	7,5	simultaneous locking (with resemble keys)
DA 22F	-02	.53	13,5	simultaneous locking (with resemble keys)
DA 22F	-03	.53	19,5	simultaneous locking (with resemble keys))
DA 22F	- 04	.53	7,5	different locking (with different keys)
DA 22F	- 05	.53	13,5	different locking (with different keys)
DA 22F	- 06	.53	19,5	different locking (with different keys)

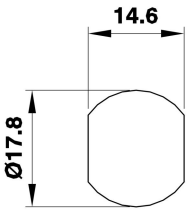

Quarter turns

Quarter turn key

Article no.		Dimensions in mm	
Series	Material		
	Black	D	L
for double bit operating „BDB“			
SDB 3	Zamak	Ø3,2	90
SDB 5	Zamak	Ø5,2	90
for triangular operating „BDK“			
SDK 7	Zamak	Δ7,2	78
SDK 8	Zamak	Δ8,2	78
for square operating „BVK“			
SVK 7	Zamak	□7,2	78
SVK 8	Zamak	□8,2	78

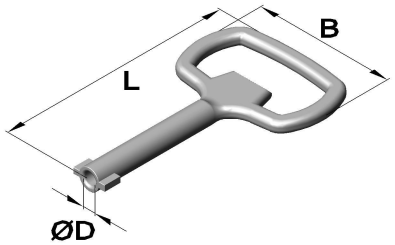

Actuations

Stainless steel (V4A) raw on request

Article no.					Dimensions in mm	Actuation
Series	material					
	Chrome plated	Black			A	
	Zamak		Stainless steel	plastic		
Actuation „Square“						
BVK 7	Chrome plated	.57	VA	KST	□7	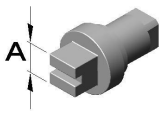 „S“ with port
BVK 8	Chrome plated	.57	VA	KST	□8	
BVK 8 S	Chrome plated	-	VA	-	□8	
Actuation „Triangular“						
BDK 7	Chrome plated	.57	VA	-	Δ7	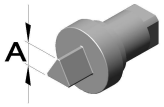
BDK 8	Chrome plated	.57	VA	KST	Δ8	
Actuation „Double bit“						
BDB 3	Chrome plated	.57	VA	KST	Ø3	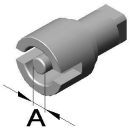
BDB 5	verchromt	.57	VA	KST	Ø5	

actuation

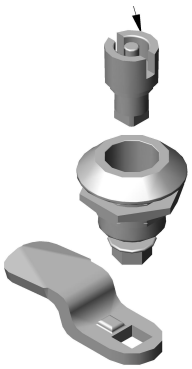

TÜVRheinland ZERTIFIZIERT Management System ISO 9001:2015 ISO 14001:2015 www.tuv.com ID 9108624624

Further material and surface finishes on demand. We will be pleased to give you advice.
Phone: +49 (0) 231 / 725 790 -0 eMail: info@hokon-verschlusstechnik.de
Fax: +49 (0) 231 / 725 790 -10 Homepage: www.hokon-verschlusstechnik.de

Quarter turns

Housing „DG“

Strong execution, closing stroke 90°

Material and surfaces:
Zinc die cast (Zamak) chrome plated
Zinc die cast (Zamak) black coated
Stainless steel (V2A) raw
Stainless steel (V4A) raw on request
Plastic (KST) black

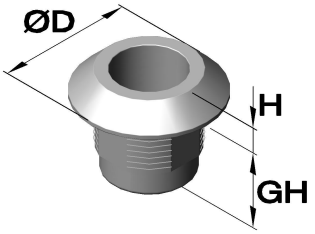

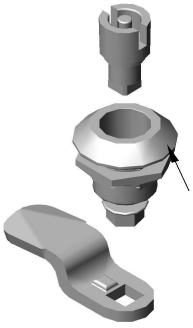
Housing

Please insert the Art no. for the operating mechanism and for the latch.

Article no.					Dimensions in mm		
Series	Material				Ø D	GH	H
	Chrome plated	Black	Raw	Black			
	Zamak	Zamak	Stainless steel	Plastic			
DG 28-4	Chrome plated	.57	VA	KST	28	18	4
DG 30	Chrome plated	-	-	-	30	18	4
DG 32	Chrome plated	.57	VA	KST	32	18	6

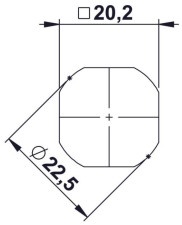

extended
Housing „DG“

Strong execution, closing stroke 90°

Material and surfaces:
Zinc die cast (Zamak) chrome plated
Stainless steel (V2A) raw
Stainless steel (V4A) raw on request

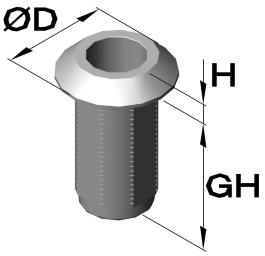

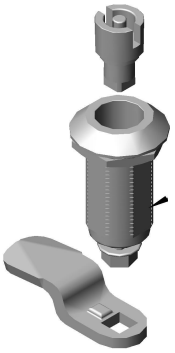
housing

Please insert the Art no. for the operating mechanism and for the latch.

Article no.			Dimensions in mm		
Series	Material		Ø D	GH	H
	Chrome plated	Raw			
	Zamak	Stainless steel			
DG 32-30/1	Chrome plated	VA	32	30	6
DG 32-36/1	Chrome plated	VA	32	36	6
DG 32-40/1	Chrome plated	VA	32	40	6
DG 32-50/1	Chrome plated	VA	32	50	6
DG 32-60/1	Chrome plated	VA	32	60	6

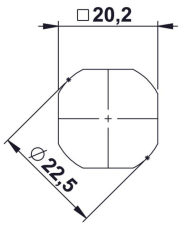

Quarter turns

Quarter turn lockable „DA“

Strong execution, closing stroke 90°

Material and surfaces:
Zinc die cast (Zamak) chrome plated
Stainless steel seawater restistant (V4A) raw
Zinc die cast (Zamak) black coated
Plastic (KST) black

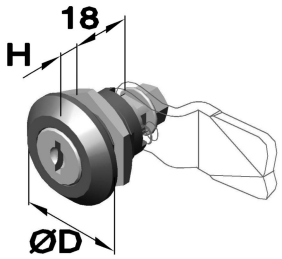

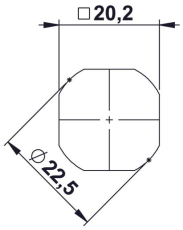

Please insert the art no. for the latch (Art.no. ZH)

Article no.						Dimensions in mm		Closure
Series	Execution	Material						
		Chrome plated	Raw	Coated	Black	Ø D	H	
		Zamak	Stainless steel	Zamak	Plastic			
DA 28	-01	Chrome plated	.35	.57	KST	28	6	simultaneous locking (with resemble keys)
DA 32	-01	Chrome plated	-	.57	KST	32	6	simultaneous locking (with resemble keys)
DA 28	-02	Chrome plated	.35	.57	KST	28	6	different locks (with different keys)
DA 32	-02	Chrome plated	-	.57	KST	32	6	different locks (with different keys)

Wing handle quarter turn „FG“

Strong execution, closing stroke 90°

Material and surfaces:
Zinc die cast (Zamak) chrome plated
Zinc die cast (Zamak) black coated
Plastic (KST) black

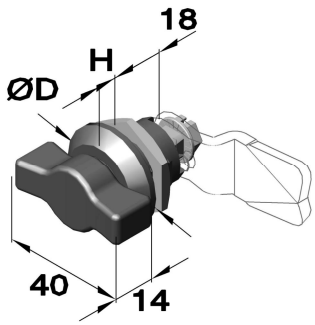

Please insert the art no. for the latch (Art.no. ZH)

Article no.				Dimensions in mm	
Series	Execution	Material			
		Black	Black	Ø D	H
		Zamak	Plastic		
FG /	DG 28-4	.57	.87	28	4
FG /	DG 32	.57	.87	32	6

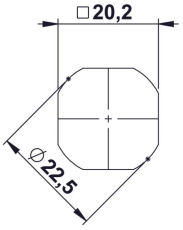

TÜVRheinland ZERTIFIZIERT Management System ISO 9001:2015 ISO 14001:2015 www.tuv.com ID 9108624624

Further material and surface finishes on demand. We will be pleased to give you advice.
Phone: +49 (0) 231 / 725 790 -0 eMail: info@hokon-verschlusstechnik.de
Fax: +49 (0) 231 / 725 790 -10 Homepage: www.hokon-verschlusstechnik.de

Quarter turns

Wing quarter turn „FD“

Strong execution, closing distance 90°

Material and surfaces:
Zinc die cast (Zamak) chrome plated
Zinc die cast (Zamak) black coated
Stainless steel seawater resistant (V4A) raw
Plastic (KST) black

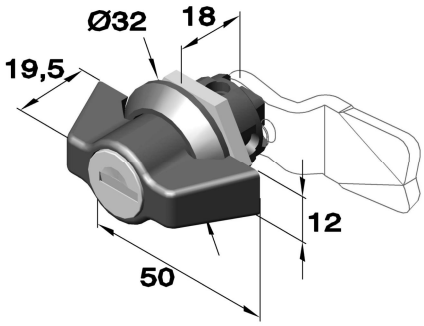

Please insert the art no. for the latch (Art.no. ZH)

Article no.						Closure
Series	Execution	Material				
		Chrome plated	Black	Raw	Black	
		Zamak	Zamak	Stainless steel	Plastic	
FD-50	- 00	.53	.57	.30	.87	without lock
FD-50	- 01	.53	.57	.30	.87	simultaneous locking (with resemble keys)
FD-50	- 02	.53	.57	.30	.87	different locks (with different keys)

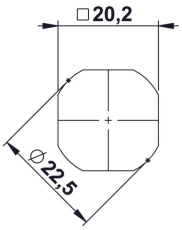

Wing quarter turn for padlock„FDV-50“

Strong execution, closing stroke90°

For clamp Ø4,5-Ø10mm

Material and surfaces:
Zinc die cast (Zamak) black powdered
Stainless steel seawater resistant (V4A) raw

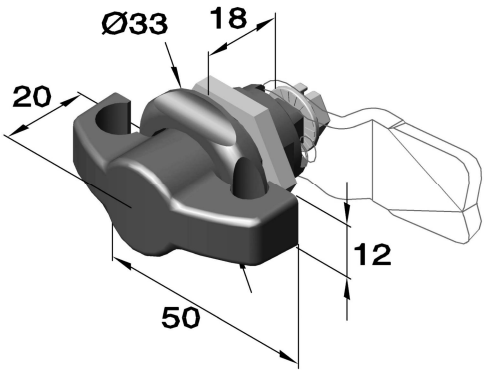

Please insert the art no. for the latch (Art.no. ZH)

Article no.		
Series	Material	
	Raw	Black
	Stainless steel	Zamak
FDV-50	.35	.57

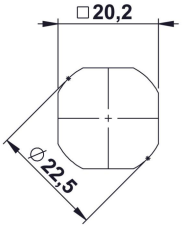

Quarter turns

T-handle quarter turn „DK-60

Strong execution, closing stroke 90°

Material and surfaces:
Plastic (KST) black-(handle)
Zinc die cast (Zamak) black powdered-(housing)

Different lock off 100 articles

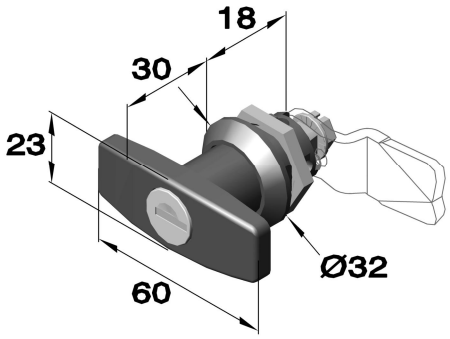

Please insert the art no. for the latch (Art.no. ZH)

Article no.			Closure
Series	Execution	Material Black Zamak	
DK-60	-00	.57	without lock
DK-60	-01	.57	simultaneous locking (with resemble keys)
DK-60	-02	.57	different locks (with different keys)

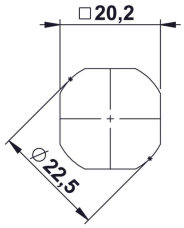

Quarter turn-clamp handle „DK-80“

Strong execution, closing stroke 90°

Material and surfaces:
Zinc die cast (Zamak) chrome plated
Zinc die cast (Zamak) black coated
Stainless steel seawater resistant (V4A) raw
Plastic (KST) black

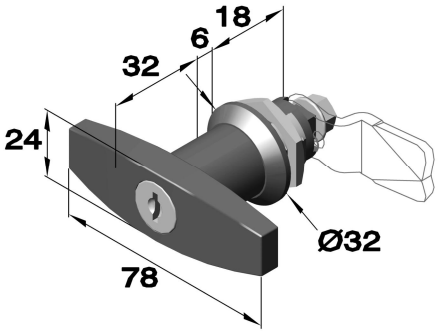

Please insert the art no. for the latch (Art.no. ZH)

Article no.						Closure
Series	Execution	Material				
		Chrome plated	Black	Raw	Black	
		Zamak	Zamak	Stainless steel	Plastic	
DK-80	-00	Chrome plated	.57	VA	Black	without lock
DK-80	-01	Chrome plated	.57	VA	Black	simultaneous locking (with resemble keys)
DK-80	-02	Chrome plated	.57	VA	Black	different locks (with different keys)

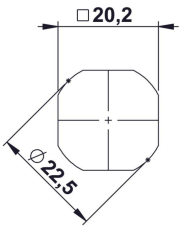

TÜVRheinland ZERTIFIZIERT
Management System ISO 9001:2015 ISO 14001:2015
www.tuv.com ID 9108624624

Further material and surface finishes on demand. We will be pleased to give you advice.
Phone: +49 (0) 231 / 725 790 -0 eMail: info@hokon-verschlusstechnik.de
Fax: +49 (0) 231 / 725 790 -10 Homepage: www.hokon-verschlusstechnik.de

Quarter turns

Quarter turn-lever handle „DH“

Strong execution, closing stroke 90°

Material and surfaces:
Zinc die cast (Zamak) chrome plated
Stainless steel seawater resistant (V4A) raw
Plastic (KST) black

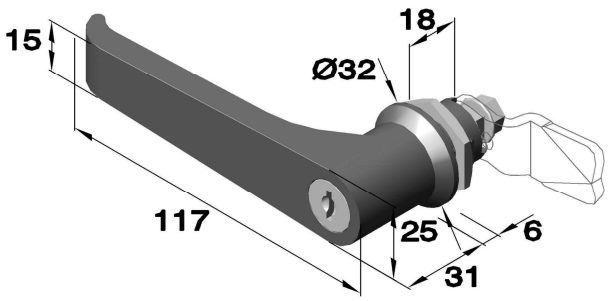

Please insert the art no. for the latch (Art.no. ZH)

Article no.					Closure
Series	Execution	Material			
		Chrome plated	Raw	Black	
		Zamak	Stainless steel	Plastic	
DH-12	-00	Chrome plated	VA	Black	without key
DH-12	-01	Chrome plated	VA	Black	simultaneous locking (with resemble keys)
DH-12	-02	Chrome plated	VA	Black	different locks (with different keys)

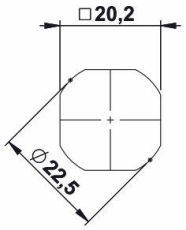

Star handle- quarter turn „SG“

Strong execution, closing stroke 90°

Material and surfaces:
Plastic (KST) black-(handle)
Zinc die cast (Zamak) black powdered-(housing)

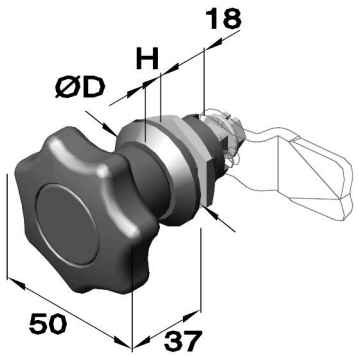

Please insert the art no. for the latch (Art.no. ZH)

Article no.			Dimensions in mm	
Series	Execution	Material		
		Black	Ø D	H
		Plastic		
SG /	DG 28-4	.87	28	4
SG /	DG 32	.87	32	6

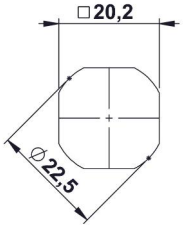

Quarter turns

Compression quarter turn „KD-18“
with spring and composition, closing stroke 90°

Compression travel 4,5mm

Material and surfaces:
Zinc die cast (Zamak) black powdered

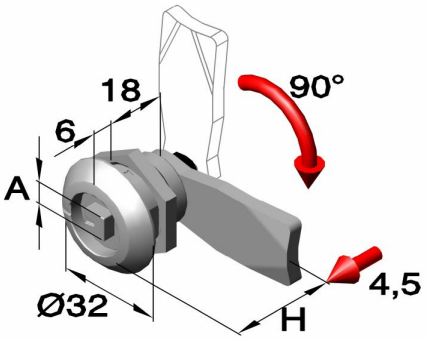

Please insert the art no. for the latch without tappet (Art.no. ZH)

Article no.			Material	Dimensions in mm
			Black	
Series	Actuation	Switch	Zamak	A
KD-18	/ BDB 3 /	no. complement	.57	Ø3
KD-18	/ BDB 5 /	no. complement	.57	Ø5
KD-18	/ BDK 8 /	no. complement	.57	Δ8
KD-18	/ BVK 8/	no. complement	.57	□8

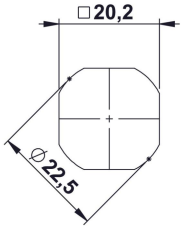

Compression quarter turn „KD-32“
with spring and composition, closing stroke 90°

Compression travel 6mm

Material and surfaces:
Zinc die cast (Zamak) black powdered
Stainless steel seawater resistant (V4A) raw

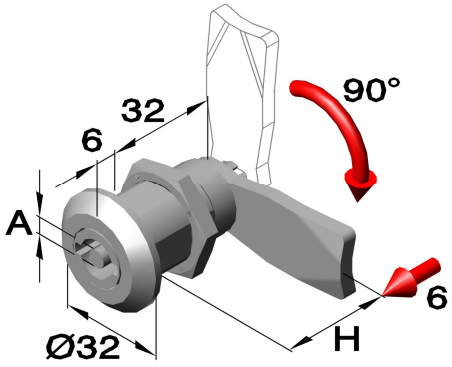

Please insert the art no. for the latch (Art.no. ZH)

Article no.			Material		Dimensions in mm
			Raw	Black	
Series	Actuation	Switch	Stainless steel	Zamak	A
KD-32	/ BDB 3 /	no. complement	.30	.57	Ø3
KD-32	/ BDB 5 /	no. complement	.30	.57	Ø5
KD-32	/ BDK 7 /	no. complement	-	.57	Δ7
KD-32	/ BDK 8 /	no. complement	-	.57	Δ8
KD-32	/ BVK 7/	no. complement	-	.57	□7
KD-32	/ BVK 8/	no. complement	.30	.57	□8

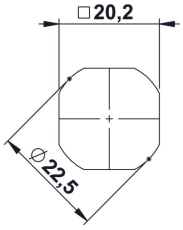

TÜVRheinland ZERTIFIZIERT Management System ISO 9001:2015 ISO 14001:2015 www.tuv.com ID 9108624624

Further material and surface finishes on demand. We will be pleased to give you advice.
Phone: +49 (0) 231 / 725 790 -0 eMail: info@hokon-verschlusstechnik.de
Fax: +49 (0) 231 / 725 790 -10 Homepage: www.hokon-verschlusstechnik.de

Quarter turns

Compression quarter turn „KD-70“
with spring and composition, closing stroke 90°

Compression travel 6mm

Material and surfaces:
Zinc die cast (Zamak) black powdered

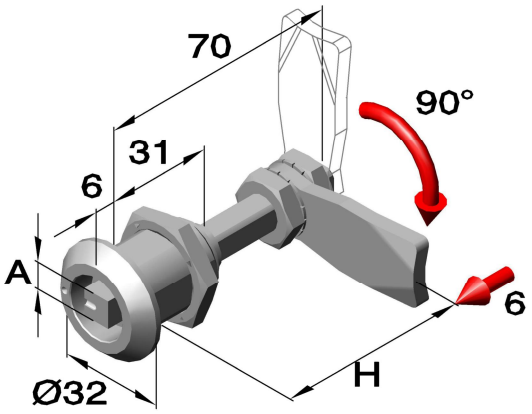

Please insert the art no. for the latch without tappet (Art.no. ZH)

Article no.			Material	Dimensions in mm
			Black	
Series	Actuation	Switch	Zamak	A
KD-70	/ BDB 3 /	no. complement	.57	Ø3
KD-70	/ BDB 5 /	no. complement	.57	Ø5
KD-70	/ BDK 7 /	no. complement	.57	Δ7
KD-70	/ BDK 8 /	no. complement	.57	Δ8
KD-70	/ BVK 7 /	no. complement	.57	□7
KD-70	/ BVK 8/	no. complement	.57	□8

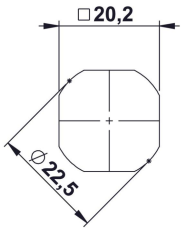

Finger grip „FP“ for quarter turns

Material and surfaces:
Plastic (KST) black

By using the fingergrip
the H-dimension reduce of 2mm.

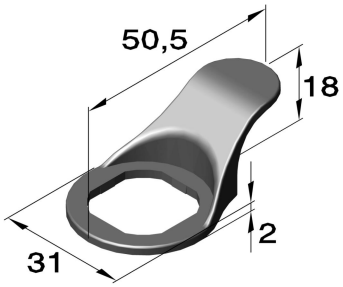

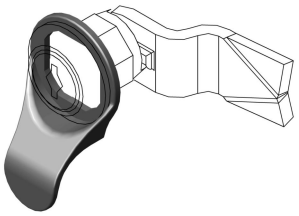

Article no.		
Series	Material	
	Black	
	Plastic	
FP-28	.87	
FP-32	.87	

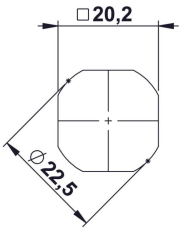

Quarter turns

Switch „ZH“ closing stroke 90°
Strong execution



Material and surfaces:
Steel zinc plated
Stainless steel (V2A) raw
Stainless steel seawater resistant (V4A) raw (off 500 articles on request)

Please insert the art no. for the actuation and the housing.

Article no.			Dimensions in mm			
Series	Material		H	L	B	S
	Steel	Stainless steel				
ZH 4-45	verzinkt	-	3	45	19	4
ZH 6-45	verzinkt	VA	6	45	19	4
ZH 8-45	verzinkt	-	8	45	19	4
ZH 10-45	verzinkt	VA	10	45	19	4
ZH 13-45	verzinkt	-	13	45	19	4
ZH 14-45	verzinkt	VA	14	45	19	4
ZH 16-45	verzinkt	-	16	45	19	4
ZH 18-35	verzinkt	-	18	34	19	4
ZH 18-45	verzinkt	VA	18	45	19	4
ZH 20-35	verzinkt	-	20	35	19	4
ZH 20-45	verzinkt	VA	20	45	19	4
ZH 22-35	verzinkt	-	22	35	19	4
ZH 22-45	verzinkt	VA	22	45	19	4
ZH 24-45	verzinkt	VA	24	45	19	4
ZH 26-45	verzinkt	VA	26	45	19	4
ZH 28-35	verzinkt	-	28	35	19	4
ZH 28-45	verzinkt	VA	28	45	19	4
ZH 30-45	verzinkt	-	30	45	19	4
ZH 32-45	verzinkt	-	32	45	19	4
ZH 34-45	verzinkt	-	34	45	19	4
ZH 35-45	verzinkt	-	35	45	19	4
ZH 36-45	verzinkt	-	36	45	19	4
ZH 38-45	verzinkt	-	38	45	19	4
ZH 40-45	verzinkt	-	40	45	19	4
ZH 42-45	verzinkt	-	42	45	19	4
ZH 44-45	verzinkt	-	44	45	19	4
ZH 45-45	verzinkt	-	45	45	19	4
ZH 47-45	verzinkt	-	45	45	19	4
ZH 50-45	verzinkt	-	50	45	19	4

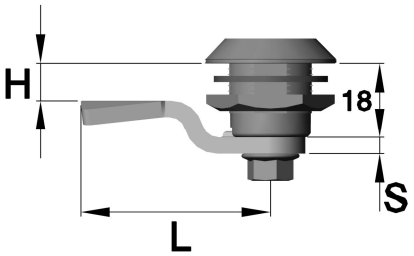

TÜVRheinland ZERTIFIZIERT Management System ISO 9001:2015 ISO 14001:2015 www.tuv.com ID 9108624624

Further material and surface finishes on demand. We will be pleased to give you advice.
Phone: +49 (0) 231 / 725 790 -0 eMail: info@hokon-verschlusstechnik.de
Fax: +49 (0) 231 / 725 790 -10 Homepage: www.hokon-verschlusstechnik.de

Quarter turns

Plastic switch „KTZ“ closing stroke 90°

Strong execution

Material and surfaces:
Plastic (KST) black



Please insert the art no. for the actuation and the housing.

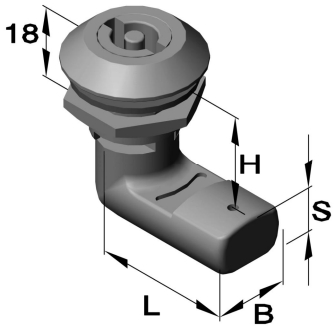

Article no.		Dimensions in mm			
Series	Material Black Plastic	H	L	B	S
KTZ 18-35	.87	18	35	19	12
KTZ 20-35	.87	20	35	19	12
KTZ 22-35	.87	22	35	19	12
KTZ 24-35	.87	24	35	19	12
KTZ 28-35	.87	28	35	19	12

Hook tongue „HZ“

Material and surfaces:
Steel zinc plated

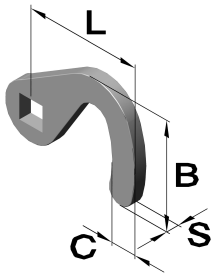

Article no.			Dimensions in mm			
Series	Execution	Material Steel	L	B	C	S
HZ	18-36	Zinc plated	36	33	8	4

Quarter turns

Quarter turn cone pulley „DS“ closing stroke 180°

Gradually bolt von 0-10 mm

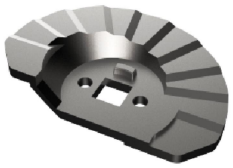

Material and surfaces:
Zinc die cast (Zamak) zinc plated

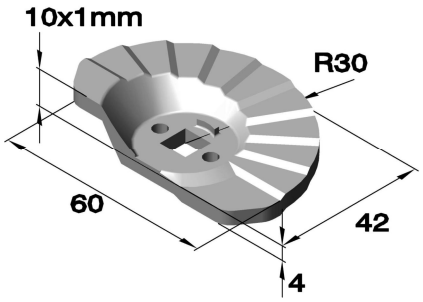

Please insert the art no. for the actuation and the housing.

Article no.		
Series	Execution	Material Zamak Zinc plated
DS-60	.01	.04

Locking handle „DV“

Spagnolet extension, with gradually bolt von 17-65 mm
Closing stroke 180°
Please insert the art no. for the actuation and the housing

Material and surfaces:
Steel zinc plated
Stainless steel raw

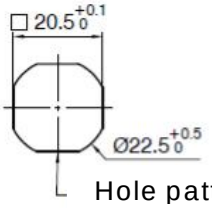

Hole pattern

Actuation Housing

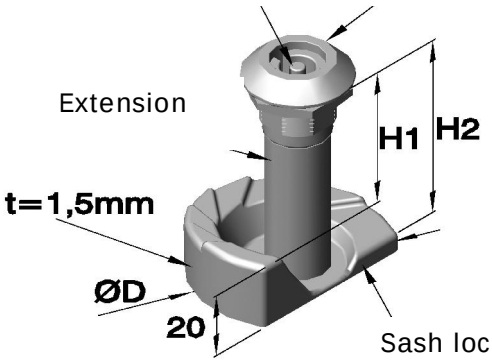

Sash lock gear step 8x1mm

Article no.			Dimensions in mm		
Series	Execution	Material Steel	H1	H2	Ø D
DV	17-25	Zinc plated	17	25	60
DV	22-30	Zinc plated	22	30	60
DV	27-35	Zinc plated	27	35	60
DV	32-40	Zinc plated	32	40	60
DV	37-45	Zinc plated	37	45	60
DV	42-50	Zinc plated	42	50	60
DV	47-55	Zinc plated	47	55	60
DV	52-60	Zinc plated	52	60	60
DV	57-65	Zinc plated	57	65	60



TÜVRheinland ZERTIFIZIERT Management System ISO 9001:2015 ISO 14001:2015 www.tuv.com ID 9108624624

Further material and surface finishes on demand. We will be pleased to give you advice.
Phone: +49 (0) 231 / 725 790 -0 eMail: info@hokon-verschlusstechnik.de
Fax: +49 (0) 231 / 725 790 -10 Homepage: www.hokon-verschlusstechnik.de

Quarter turns

Combinatory examples:

With quarter turn:“DG“ With clamp handle:“DK“ With lever handle:“DH“

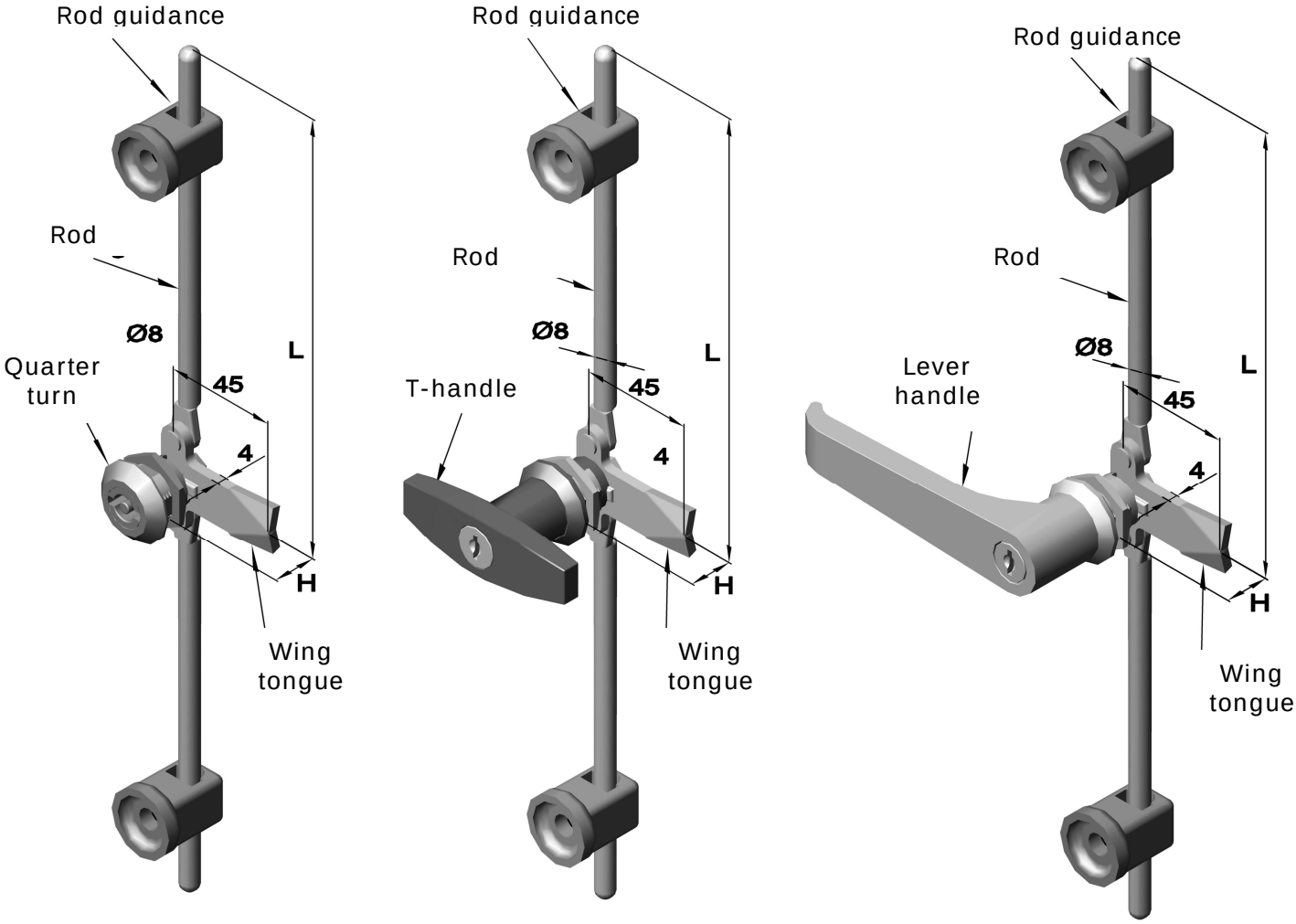

Ordering example:

Art. no. DG32/BDB3/FZ18/SR- 05-00.01.04

- SR- 05-00.01.04 — Rod
- FZ18 — Wing tongue
- BDB3 — Actuation
- DG32 — Quarter turn housing

Quarter turns

Wing tongue „FZ“ for quarter turn

Material and surfaces:
Steel zinc plated
Stainless steel (V2A) raw

Article no.			Dimensions in mm
Series	Material		H
	Zinc plated		
	Steel	Stainless steel	
FZ 6	Zinc plated		6
FZ 10	Zinc plated		10
FZ 18	Zinc plated		18
FZ 20	Zinc plated		20
FZ 22	Zinc plated	VA	22
FZ 24	Zinc plated		24
FZ 25	Zinc plated		25
FZ 26	Zinc plated		26
FZ 28	Zinc plated	VA	28
FZ 30	Zinc plated		30
FZ 32	Zinc plated		32
FZ 36	Zinc plated		36
FZ 38	Zinc plated		38

Rod guidance

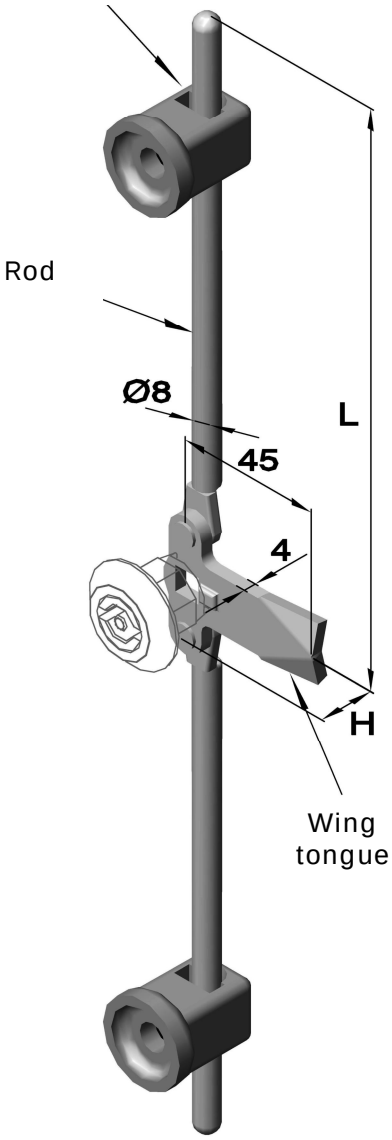

Rod guide „SFS“ rod (SR)

Material and surfaces:
Plastic (KST) black

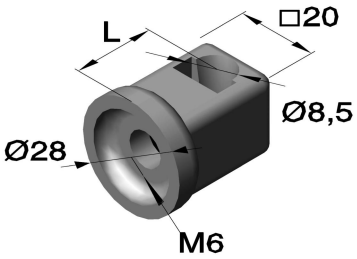

Article no.		Dimensions in mm	
Series	Material	L	for welding studs
	Plastic		
SFS 24	KST	24	M6 x 16
SFS 30	KST	30	M6 x 20

TÜVRheinland ZERTIFIZIERT Management System ISO 9001:2015 ISO 14001:2015 www.tuv.com ID 9108624624

Further material and surface finishes on demand. We will be pleased to give you advice.
Phone: +49 (0) 231 / 725 790 -0 eMail: info@hokon-verschlusstechnik.de
Fax: +49 (0) 231 / 725 790 -10 Homepage: www.hokon-verschlusstechnik.de

Quarter turns

Rod round „SR“

Material and surfaces:
Steel zinc plated

Article no.				Dimensions in mm
Series	Execution		Material: Zinc plated / Steel	L
SR 04-00	.01	-	.04	400
SR 05-00	.01	-	.04	500
SR 06-00	.01	.03	.04	600
SR 07-00	.01	.03	.04	700
SR 08-00	.01	.03	.04	800
SR 09-00	.01	.03	.04	900
SR 10-00	.01	.03	.04	1000
SR 11-00	.01	.03	.04	1100
SR 12-00	.01	.03	.04	1200

Execution .01

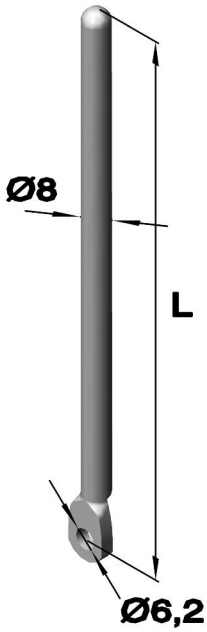

Execution .03

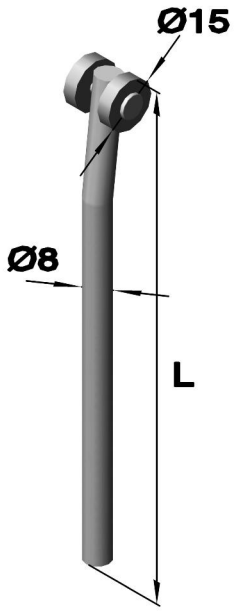

Material and surfaces:
Stainless steel (V2A) raw
Up roller polyamide black

Article no.			Dimensions in mm
Series	Execution	Material: Raw / Stainless steel	L
SR 06-00	.03	.30	600
SR 07-00	.03	.30	700
SR 08-00	.03	.30	800
SR 09-00	.03	.30	900
SR 10-00	.03	.30	1000
SR 11-00	.03	.30	1100

Adapter round (for rod „SR“ execution .03)

Material and surfaces:
Steel zinc plated
Stainless steel (V2A) raw



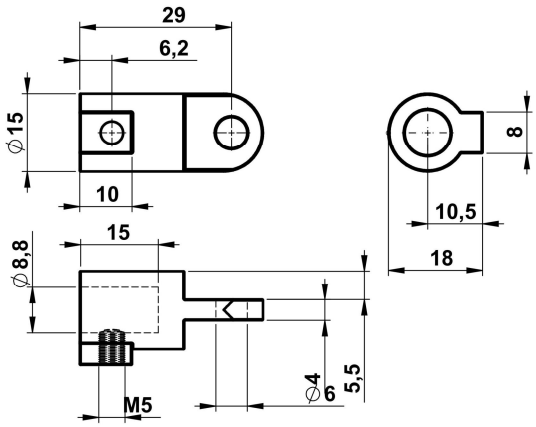

Article no.		
Series	Material	
	Zinc plated / Steel	Raw / Stainless steel
AR-01	.04	.30

Quarter turns

Pinion drive„SA“ for „ZH“ tongue

Material and surfaces:
Zinc die cast (Zamak) zinc plated
Stainless steel seawater resistant (V4A) raw

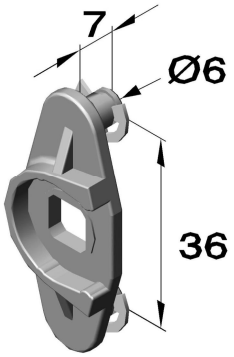

Article no.			
Series	Execution	Material	
		Zamak	Stainless steel
		Zinc plated	Raw
SA	-01	.54	.30

Pinion drive„SA“ without tongue

Material and surfaces:
Steel zinc plated

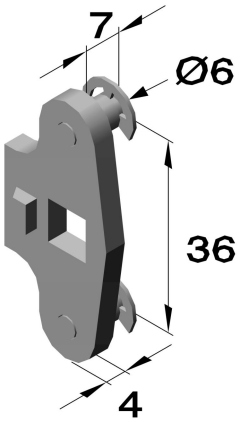

Article no.		
Series	Execution	Material
		Zinc plated
		Steel
SA	-02	.04

TÜVRheinland ZERTIFIZIERT Management System ISO 9001:2015 ISO 14001:2015 www.tuv.com ID 9108624624

Further material and surface finishes on demand. We will be pleased to give you advice.
Phone: +49 (0) 231 / 725 790 -0 eMail: info@hokon-verschlusstechnik.de
Fax: +49 (0) 231 / 725 790 -10 Homepage: www.hokon-verschlusstechnik.de

Quarter turns

Weld turn „AD40 S“

Material and surfaces:
Actuation: Zamak
Weld-turn housing : Steel zinc plated
Steel raw

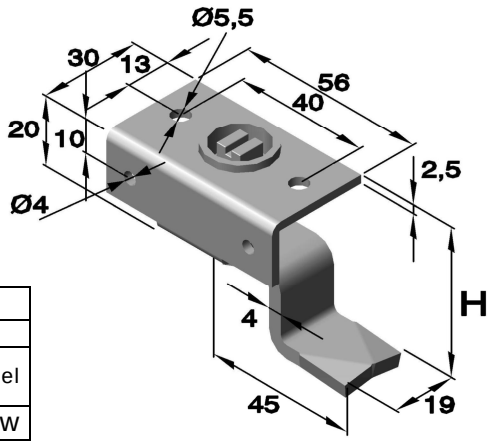

Please insert the art no. for the latch (Art no. ZH)

article no.								
Series	Actuation						Material	
	Square cut		Saddle		Double bit		Steel	Steel
	□7mm	□8mm	Δ7	Δ8	Ø3	Ø5		
AD40S	BVK7	BVK8	BDK7	BDK8	BDB3	BDB5	Zinc plated	Raw

Pointer „AZ“ for weld turn „AD“, closing distance 90°

Material and surfaces:
Steel zinc plated

Article no.		Dimensions in mm
Series	Material Steel	H
AZ 6	Zinc plated	6
AZ 8	Zinc plated	8
AZ 10	Zinc plated	10
AZ 12	Zinc plated	12
AZ 15	Zinc plated	14
AZ 16	Zinc plated	16
AZ 18	Zinc plated	18
AZ 20	Zinc plated	20
AZ 22	Zinc plated	22
AZ 24	Zinc plated	24
AZ 26	Zinc plated	26
AZ 27	Zinc plated	27
AZ 28	Zinc plated	28
AZ 30	Zinc plated	30
AZ 32	Zinc plated	32
AZ 34	Zinc plated	34
AZ 36	Zinc plated	36
AZ 37	Zinc plated	37
AZ 38	Zinc plated	38
AZ 40	Zinc plated	40
AZ 42	Zinc plated	42
AZ 44	Zinc plated	44
AZ 46	Zinc plated	46
AZ 49	Zinc plated	49
AZ 52	Zinc plated	52

Ordering example:
Art.no. AD40 / BDB3 / AZ18

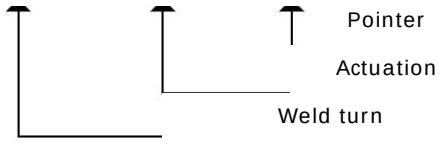

Quarter turns „specially designed“







Further material and surface finishes on demand. We will be pleased to give you advice.
Phone: +49 (0) 231 / 725 790 -0 eMail: info@hokon-verschlusstechnik.de
Fax: +49 (0) 231 / 725 790 -10 Homepage: www.hokon-verschlusstechnik.de

Camloc
Traditionally Innovative

Camloc Quick-Operating Fasteners



Camloc
Traditionally Innovative

Contents

Page

General Information A-2

Important Information ..... A-3 - A-4

General Installation Instructions for 1/4-Turn Fasteners A-5

Overview Quick-Operating Fasteners A-6

1/4-Turn Fasteners

5F Series ..... B-1 - B-4

99F Series ..... C-1 - C-3

50F Series (900 N Tensile Strength) ..... D-1 - D-6

50F Series (3.700 N Tensile Strength) ..... E-1 - E-6

2600 / 2700 Series ..... F-1 - F-11

D4002 Series ..... G-1 - G-10

991F Series ..... H-1 - H-5

One-Piece Fasteners

V936F Series ..... I-1 - I-2

713F Series ..... J-1 - J-2

Push Button Fasteners

15F Series ..... K-1 - K-3

Push-Turn Fasteners

715F Series ..... L-1 - L-3

716F Series ..... M-1 - M-3

717F Series ..... N-1 - N-3

PT10 Series ..... O-1 - O-4

Pawl Latches

V964L Series ..... P-1 - P-2

V965L Series ..... Q-1 - Q-2

Index

The Camloc brand was established in 1937. Since that time our fastening systems have been successfully integrated into numerous applications within many different industries.

Our customers benefit from our more than 70 years of fastening experience.

We provide local support for innovative, high quality fastening systems supplied globally to the strictest environmental and working conditions.



Certificate of Registration

QUALITY MANAGEMENT SYSTEM - ISO/TS 16949:2009

This is to certify that:

Alcoa Fastening Systems
Kelkheim Operations
Fairchild Fasteners Europe-Camloc GmbH
Industriestraße 8
65779 Kelkheim
Germany

Holds Certificate No: TS 515931

and operates a Quality Management System which complies with the requirements of ISO/TS 16949:2009 for the following scope:

Design and manufacture of fasteners and fastener solutions.

For and on behalf of BSI:

Managing Director, BSI EMEA

Originally registered: 07/05/2010 Latest Issue: 07/05/2010 Expiry Date: 06/05/2013

IATF Number: 0102398

Page: 1 of 1

IATF Contracted Office: 12110 Sunset Hills Road, Suite 200, Reston, VA20190, USA

The British Standards Institution is incorporated by Royal Charter.
BSI (EMEA) Headquarters: 389 Chiswick High Road, London, W4 4AL, United Kingdom

ISO/TS 16949: 2009



Zertifikat

UMWELTMANAGEMENTSYSTEM – DIN EN ISO 14001: 2004

Hiermit wird bestätigt, dass die

Alcoa Fastening Systems
Kelkheim Operations
Fairchild Fasteners Europe-Camloc GmbH
Industriestraße 8
65779 Kelkheim
Deutschland

Inhaber des Zertifikates Nr. EMS 518280

ein Umweltmanagementsystem gemäß DIN EN ISO 14001:2004 für den folgenden Geltungsbereich anwendet:

Entwickeln und Herstellen von Verschlüssen und Sonderkonstruktionen der Verschlusstechnik.

Für und im Namen von BSI:

Geschäftsführung, BSI (Deutschland)

Ursprünglich zertifiziert: 05/07/2007 Letzte Ausgabe: 18/03/2010 Ablaufdatum: 17/03/2013

Seite 1 von 1

Dieses Zertifikat wurde elektronisch erstellt und bleibt Eigentum der BSI und ist an die Vertragsbedingungen gebunden.
Ein elektronisches Zertifikat kann online bestätigt werden.
Kopien können auf www.bsigroup.de/de/Audit-und-Zertifizierung/138880/ oder per Telefon +49 (0) 6181 90370 bestätigt werden.

Die British Standards Institution ist eingetragen in die Royal Charter.
BSI Management Systems und Umweltgutachter Deutschland GmbH, Dörnigheimer Straße 2a, 63452 Hanau, Deutschland.

DIN EN ISO 14001 : 2009

Please find additional information about our environmental program under: **www.alcoa.com**.

Your Alcoa Fastening Systems team

Disclaimer:

Parts listed are subject to technical changes. All dimensions in mm. All information is correct to the best of our knowledge at the time of printing. No liability for disadvantages caused by printing errors or false application.

Advantages of the Camloc 1/4-Turn Fastener

- Secure quick release fastener system
- Locking and unlocking by a quarter turn
- Long life - high number of operating cycles
- Hand or tool-operated
- Easy to use and fast operation reduces assembly costs
- Camloc fasteners are standardised worldwide
- Wide range of sizes
- Stud assemblies are captive in the panel
- Tolerance compensating
- Vibration-resistant

Components

The 1/4-turn fastener consists of a stud, retaining ring and receptacle.

¼ turn fasteners require a spring element in the joint to enable them to work correctly. Depending upon the fastener type and mounting requirements the spring element can be part of the stud assembly or incorporated in the receptacle.

Stud assemblies with snap-in grommets are available on some series giving a captive assembly without the need for a retaining washer.

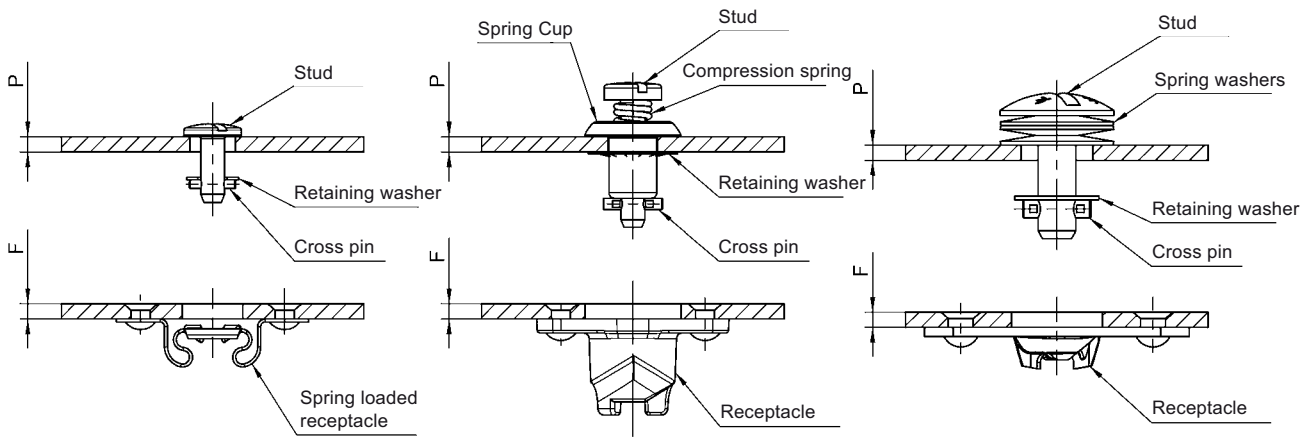

Design Principles

Quarter-turn fasteners connect components under an elastic preload.

The spring element to produce the preload can be part of the stud or receptacle.

Fastener tensile loads specified in the catalogue are reached after overcoming the spring element generated preload.

Unlike threaded fasteners, Camloc fasteners do not rely on the elasticity of joint and fastener materials to accomplish preload. The stud assembly or receptacle is designed with a spring element which allows repeated application of controlled preload with assured reliability over an high number of cycles.

How it Operates

When the stud assembly is rotated, the stud cross pin rides up the cam causing a controlled joint preload to be applied. This action is accomplished by rotating the stud 90°. At this point a positive mechanical stop is reached and the cross pin falls into the locking detent. Excellent resistance to vibration induced loosening is assured.

Stud Assembly

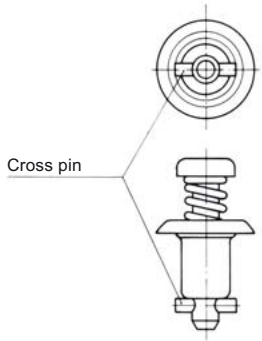

Receptacle

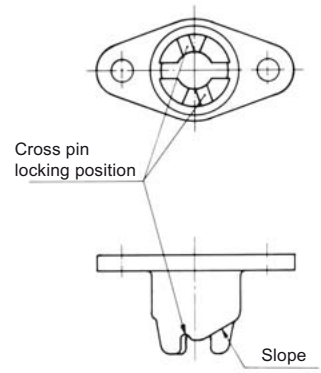

Unlocked

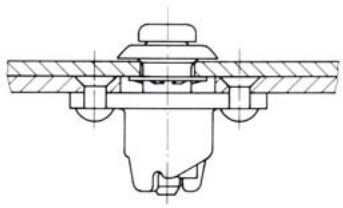

Locked

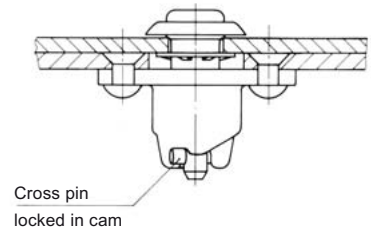

Lock and unlock the stud by a quarter turn.

For general installation instructions please refer to the next page.

Selecting the Fastener

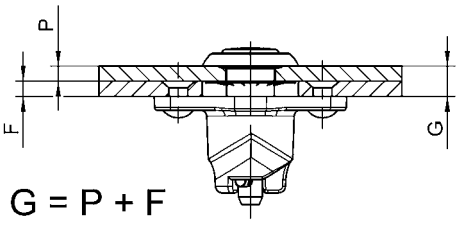

P = panel thickness (stud assembly)

F = frame thickness (receptacle)

G = total thickness, consisting of P + F as well as possible gaskets, paint thickness or gaps. This dimension gives the stud length number in the corresponding series tables.

Installation

Stud

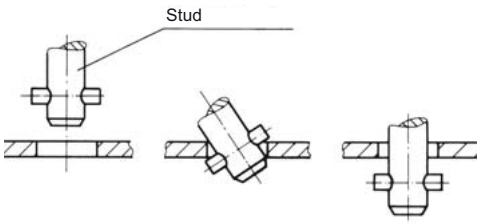

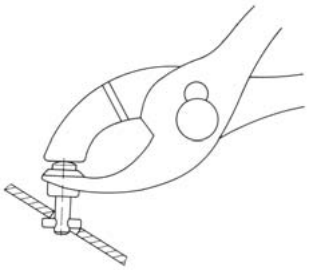

For short, spring-loaded stud assemblies, the use of 4P3-1 pliers is recommended.

With Grommet

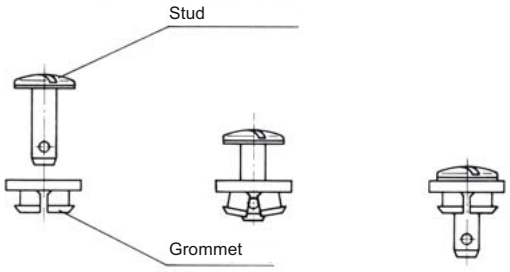

With retaining washer (slotted)

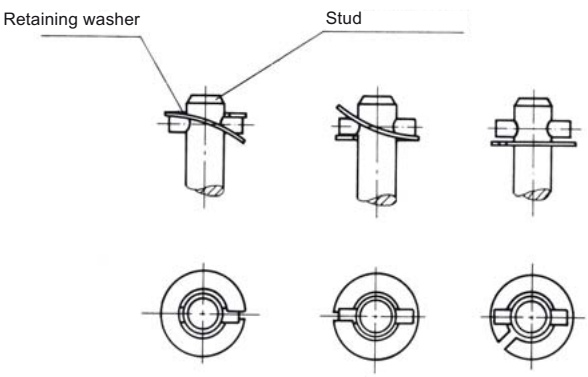

With retaining washer

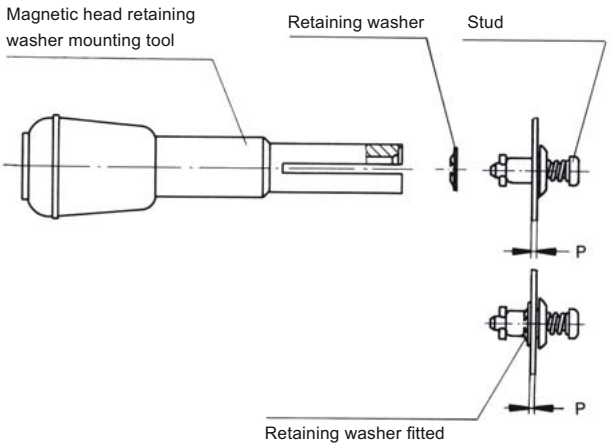

Overview Quick-Operating Fasteners

Series	Max. Tensile Strength*	Working Load*	Slotted Head	Cross Recess Head	Hex Head	Hex Recess Head	Fixed Wing Head	Offset Fixed Wing Head	Folding Bail Handle	Pages
5F	670 N	450 N	✗	✗						B1-B4
99F	700 N	480 N	✗							C1-C3
50F	900 N	650 N	✗	✗	✗	✗	✗	✗	✗	D1-D6
2600	1.330 N	900 N	✗	✗			✗			F1-F11
2700	1.330 N	900 N	✗	✗						F1-F11
50F	3.700 N	2.600 N	✗	✗	✗	✗	✗	✗	✗	E1-E6
D4002	4.700 N	3.100 N	✗	✗		✗	✗		✗	G1-G10
991F	10.000 N	7.000 N			✗	✗	✗	✗	✗	H1-H5
V936F	300 N	200 N	✗							I1-I2
715F	700 N	600 N	✗							L1-L3
716F	1.400 N	1.200 N	✗							M1-M3
PT10	1.200 N	800 N	✗	✗						O1-O4
717F	3.000 N	2.500 N	✗							N1-N3

Series	Max. Tensile Strength*	Working Load*	Plastic Star Form Head	Plastic Wing Head	Square Head	Knurled Head	Plastic Triangular Head	Folding Wing Head	Push Button	Pages
50F	900 N	650 N	✗	✗						D1-D6
2600	1.330 N	900 N	✗	✗		✗	✗			F1-F11
50F	3.700 N	2.600 N	✗	✗	✗					E1-E6
991F	10.000 N	7.000 N						✗		H1-H5
15F	1.330 N	930 N							✗	K1-K3
V936F	300 N	200 N				✗				I1-I2
715F	700 N	600 N				✗				L1-L3
716F	1.400 N	1.200 N				✗				M1-M3
PT10	1.200 N	800 N		✗						O1-O4
717F	3.000 N	2.500 N				✗				N1-N3

* Load limitations within series are possible. Please check the footnotes on the relevant catalogue pages.

5F Series

Features
Max. tensile strength 670 N, working load 450 N.
Plastic washer stud assembly to protect decorative surfaces.
Spring loaded receptacle.

Selection Instructions
1. Select stud assembly and receptacle, page B-2 und B-4.
2. Select retaining washer or grommet, page B-3.
3. Select stud length number from total thickness G using the formula and table below (e.g. V5S5-*AGV).

Determining the stud length number:

With retaining washer
G = P + F



With Grommet
G = P + F + 1,4

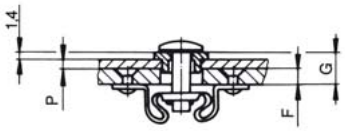

Stud Length Table

Total Thickness G	Stud Length No. When Using Receptacles
0,50 - 0,90	1
0,90 - 1,30	2
1,30 - 1,65	3
1,65 - 2,05	4
2,05 - 2,40	5
2,40 - 2,80	6
2,80 - 3,20	7
3,20 - 3,55	8
3,55 - 3,95	9
3,95 - 4,30	10
4,30 - 4,70	11
4,70 - 5,10	12
5,10 - 5,45	13
5,45 - 5,85	14
5,85 - 6,20	15
6,20 - 6,60	16
6,60 - 7,00	17
7,00 - 7,35	18
7,35 - 7,75	19
7,75 - 8,15	20
8,15 - 8,50	21

Other lengths on request.

Preferred dash-lengths

Style	Dimensions	Materials / Finish	°C	Part No.
Slotted Recess Head 	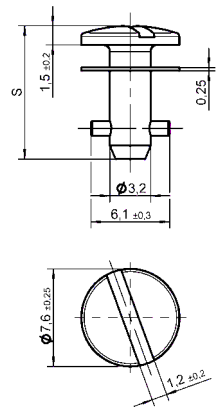 S = 6,70 + (0,38 x length no.)	Steel / zinc-plated, CrVI-free, clear passivation with plastic washer (PA6) Steel / nickel-plated with plastic washer (PA6)	100 100	**V5S5- *AGV** **5S27-***
Cross Recess Head 	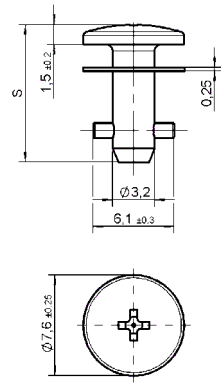 S = 6,70 + (0,38 x length no.)	Steel / zinc-plated, CrVI-free, clear passivation with plastic washer (PA6) Stainless steel with stainless steel washer (tensile strength 470 N max.)	100 200	**V5S21- *AGV** **5S15-***

* Length no. from Table, page B-1.
For installation dimensions see page B-3.

Installation Dimensions	Accessories	Material / Finish	Panel Thickness P	Part No.
Retaining Washer **Panel Thickness P up to 2,3** 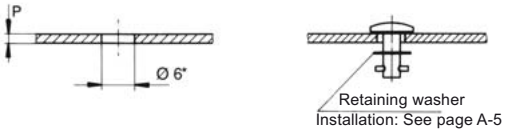 **Panel thickness P over 2,3** 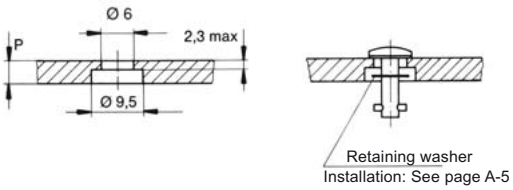 * For P up 1,4 : ∅ 5,6 for installation without retaining washer	Retaining washer 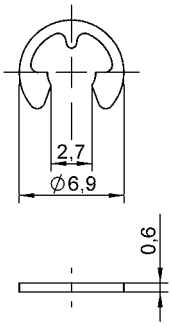 Retaining washer 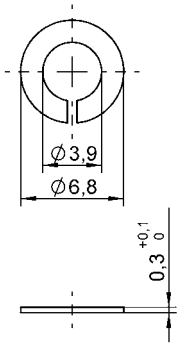	Steel/zinc-plated, CrVI-free, clear passivation Stainless steel		**V5W3-1AG** **5S3-2**
Snap-In Grommet **Panel thickness P up to 2,9**  P max / G min: 1,4 / 2,0; 2,9 / 3,5 **Panel thickness P over 2,9** 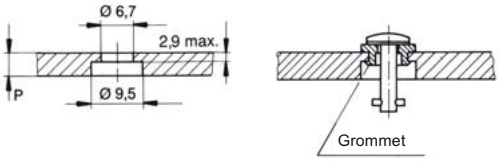	Grommet 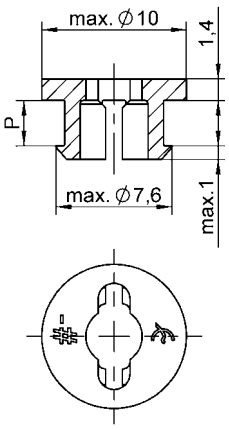	Plastic (PA6) black	to 1,4 1,8 - 2,9	**5S72-5-1AA** **5S72-9-1AA**

Style	Dimensions	Materials / Finish	°C	Part-No.
Type 1 Rivet / Screw Mounting 	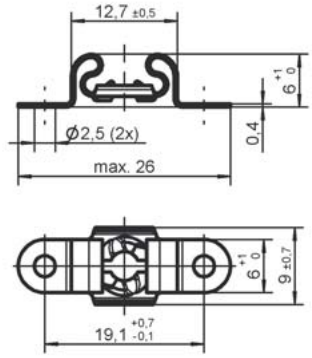	Steel / zinc flake coated Stainless steel	180 200	**V5R2-1AK7** **5R2-3**

Receptacle Installation Instructions

Dimensions
Rivet / Screw Mounting 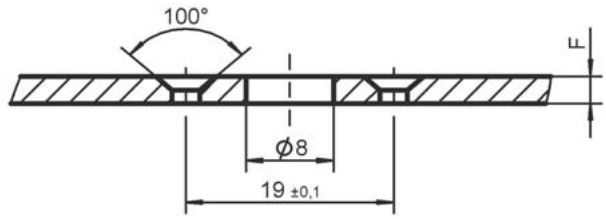

99F Series

Features
Max. tensile strength 700 N, working load 480 N.

Increased grip range.
Externally threaded receptacles for use in castings or on panels with a retaining nut (see page C-3).
Encapsulated design, splash-proof.

Selection Instructions
1. Select stud assembly and receptacle, page C-2 and C-3.
2. Select hex nut for receptacle, if necessary, page C-3.
3. Select stud retaining washer, page C-2.
4. Select stud length number from total thickness G using the formula and table below (e.g. 99S10-01AG).

Determining the stud length number:

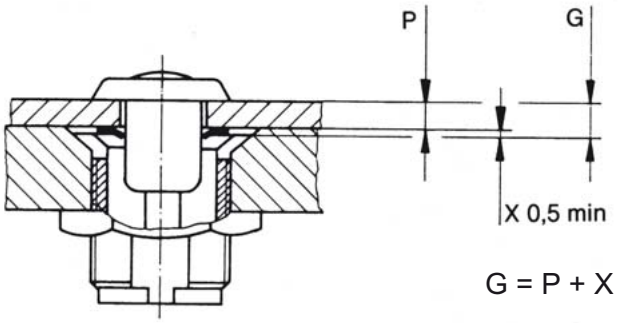

Total Thickness G	Stud Length No.
0,5 - 1,5	01
1,5 - 3,0	03
3,0 - 4,5	05
4,5 - 6,0	07
6,0 - 7,5	09
7,5 - 9,0	11
9,0 - 10,5	13
10,5 - 12,0	15
12,0 - 13,5	17
13,5 - 15,0	19

Other lengths on request.

Preferred dash-lengths

Style	Dimensions	Materials / Finish	°C	Part No.
Slotted Recess Head 	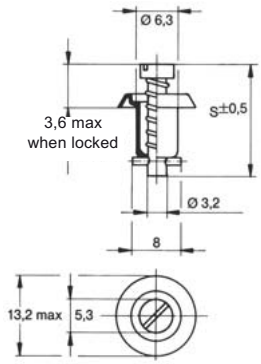 S = 15,5 + (0,76 x length no.)	Steel / zinc-plated, CrVI-free, clear passivation	100	**V99S10-*AG**

* Length no. from Table, see page C-1.

Stud Installation Instructions

Installation Dimensions	Accessories	Materials / Finish	Part No.
Panel Thickness P 0,5 - 3,2 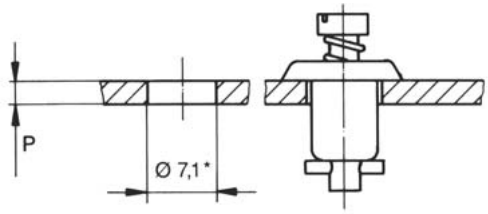 * For P up to 1,65 m Ø 6,5 for installation without retaining washer	Retaining washer 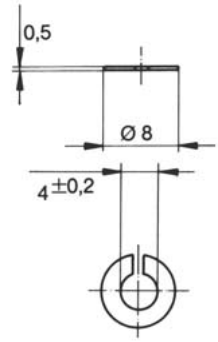	Stainless steel	**2600-SW**
Panel Thickness P over 3,2 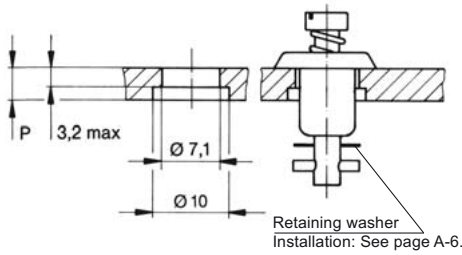			
Panel Thickness P 0,50 - 4,75 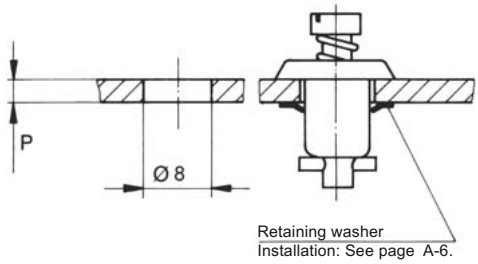	Retaining washer 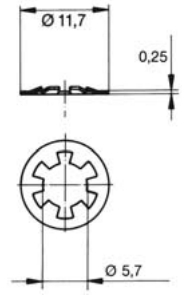	Steel / zinc-plated, CrVI-free, transparent passivated Stainless steel	**99W10-01A1** **V2600-LW-7**
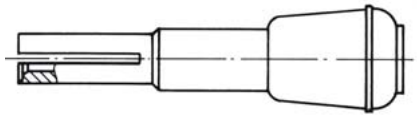	**Mounting tool** for retaining washer V2600-LW-7 and 99W10-01A1		**T98-1**

Style	Dimensions	Materials / Finish	°C	Part No.
Open 	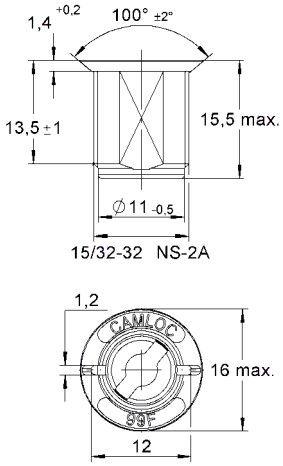	Zinc die casting / zinc-plated, CrVI-free, clear passivation	100	**99R10-01A1**
Encapsulated 	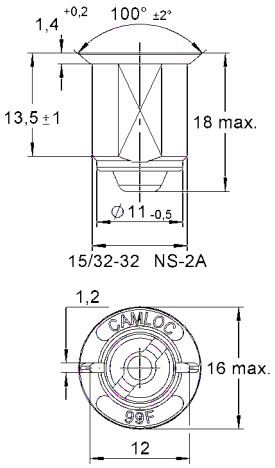	Zinc die casting / zinc-plated, CrVI-free, clear passivation Capsule: Stainless steel	100	**99E10-01**

Receptacle Installation Instructions

Installation Dimensions	Accessories	Materials / Finish	Part No.
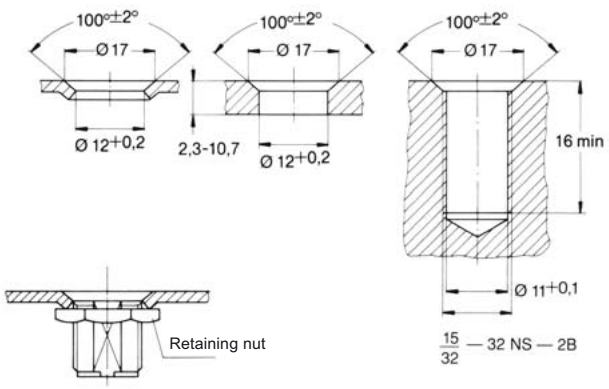	Retaining nut 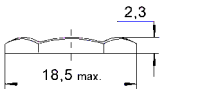 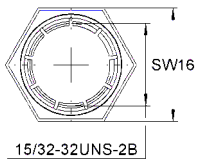	Steel / zinc-plated, CrVI-free, clear passivation	**99N10-01A1**
Installation torque 3 Nm	Tap		**15/32-32 NS-2B**

50F Series

Features

Max. tensile strength 900 N, working load 650 N.
Stud assembly incorporates a plastic washer to protect decorative surfaces.
Snap-in or clip-on spring loaded receptacle.
Snap-in grommet for quick stud installation without a retaining washer.

Selection Instructions

1. Select stud assembly and receptacle, page D-2 to D-4 and D-6.
2. Select retaining washer or grommet, page D-5.
3. Select stud length number from total thickness G using the formula and table below (e.g. 50E21-*AGV).

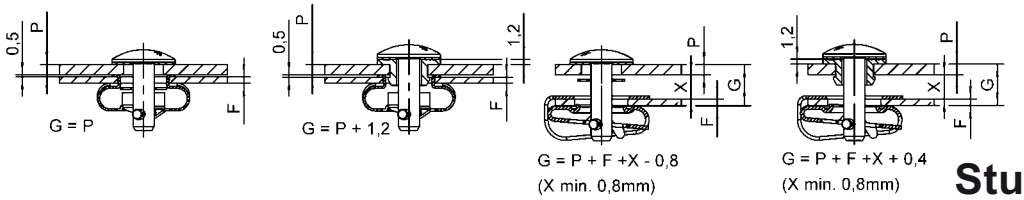

Stud Length Table

Total Thickness G	Stud Length No. when using Receptacles **Type 1 F= 1,0 - 2,1**
0,50 - 1,10	5
1,10 - 1,70	6
1,70 - 2,30	7
2,30 - 2,90	8
2,90 - 3,50	9
3,50 - 4,10	10
4,10 - 4,70	11
4,70 - 5,30	12
5,30 - 5,90	13
5,90 - 6,50	14
6,50 - 7,10	15
7,10 - 7,70	16
7,70 - 8,30	17
8,30 - 8,90	18
8,90 - 9,50	19
9,50 - 10,10	20
10,10 - 10,70	21
10,70 - 11,30	22
11,30 - 11,90	23
11,90 - 12,50	24
12,50 - 13,10	25
13,10 - 13,70	26
13,70 - 14,30	27
14,30 - 14,90	28
14,90 - 15,50	29
15,50 - 16,10	30

Total Thickness G	Stud Length No. when using Receptacles **Type 2 F= 2,1 - 3,0**
0,50 - 1,10	7
1,10 - 1,70	8
1,70 - 2,30	9
2,30 - 2,90	10
2,90 - 3,50	11
3,50 - 4,10	12
4,10 - 4,70	13
4,70 - 5,30	14
5,30 - 5,90	15
5,90 - 6,50	16
6,50 - 7,10	17
7,10 - 7,70	18
7,70 - 8,30	19
8,30 - 8,90	20
8,90 - 9,50	21
9,50 - 10,10	22
10,10 - 10,70	23
10,70 - 11,30	24
11,30 - 11,90	25
11,90 - 12,50	26
12,50 - 13,10	27
13,10 - 13,70	28
13,70 - 14,30	29
14,30 - 14,90	30
14,90 - 15,50	31
15,50 - 16,10	32

Total Thickness G	Stud Length No. when using Receptacles **Type 3**
2,30 - 2,90	5
2,90 - 3,50	6
3,50 - 4,10	7
4,10 - 4,70	8
4,70 - 5,30	9
5,30 - 5,90	10
5,90 - 6,50	11
6,50 - 7,10	12
7,10 - 7,70	13
7,70 - 8,30	14
8,30 - 8,90	15
8,90 - 9,50	16
9,50 - 10,10	17
10,10 - 10,70	18
10,70 - 11,30	19
11,30 - 11,90	20
11,90 - 12,50	21
12,50 - 13,10	22
13,10 - 13,70	23
13,70 - 14,30	24
14,30 - 14,90	25
14,90 - 15,50	26
15,50 - 16,10	27
16,10 - 16,70	28
16,70 - 17,30	29
17,30 - 17,90	30

Other lengths on request.

Preferred dash-lengths

Style	Dimensions	Materials / Finish	°C	Part No.
Slotted Recess Head 	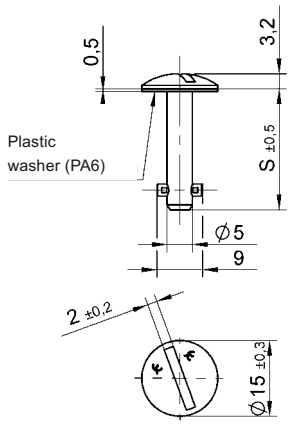 S = 11,40 + (0,6 x length no.)	Steel / zinc-plated, CrVI-free, clear passivation with plastic washer (PA6) Stainless steel with plastic washer (PA6)	80 80	**50E21-*AGV** **50E21-*S**
Cross Recess Head 	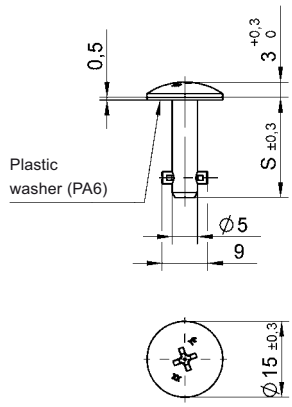 S = 11,40 + (0,6 x length no.)	Steel / zinc-plated, CrVI-free, clear passivation with plastic washer (PA6)	80	**50E70-*AGV**
Hex Head Slotted Recess 	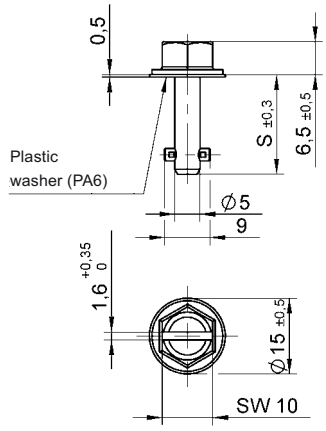 S = 11,40 + (0,6 x length no.)	Steel / zinc-plated, CrVI-free, clear passivation with plastic washer (PA6)	80	**50E90-*AGV**

* Length no. from Table, see page D-1.

Style	Dimensions	Materials / Finish	°C	Part No.
Hex Recess Head 	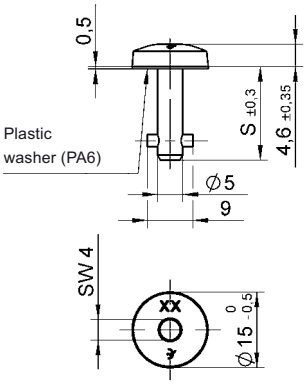 S = 11,40 + (0,6 x length no.)	Steel / zinc-plated, CrVI-free, clear passivation with plastic washer (PA6)	80	**50E60-*AGV**
Fixed Wing Head 	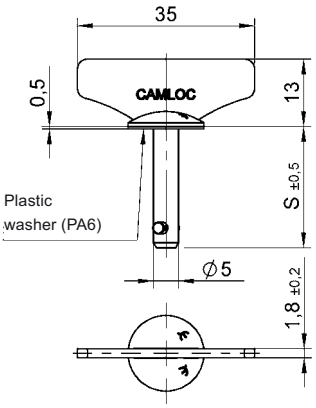 S = 11,40 + (0,6 x length no.)	Steel / zinc-plated, CrVI-free, clear passivation with plastic washer (PA6) Stainless steel with plastic washer (PA6)	80 80	**50E21-*WAGV** **50E21-*WS**
Offset Fixed Wing Head 	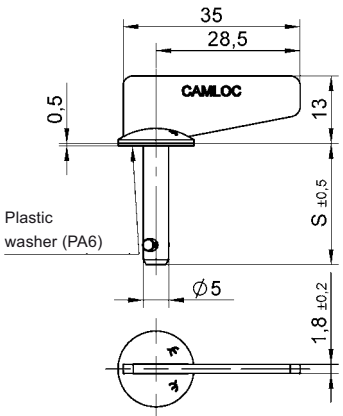 S = 11,40 + (0,6 x length no.)	Steel / zinc-plated, CrVI-free, clear passivation with plastic washer (PA6)	80	**50E21-*W0AGV**

* Length no. from Table, see page D-1.

Style	Dimensions	Materials / Finish	°C	Part No.
Folding Bail Handle 180° 	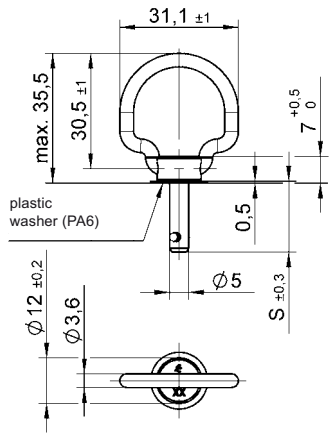	Steel / zinc-plated, CrVI-free, clear passivation with plastic washer (PA6)	80	**50E18-*AGV**
Plastic Star Form Head 	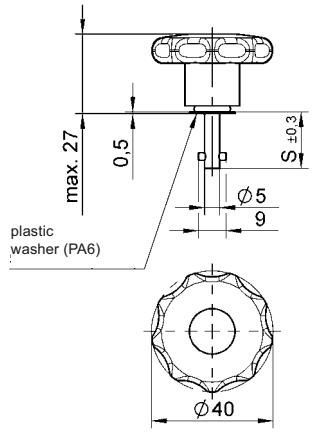	Steel / zinc-plated, CrVI-free, clear passivation with plastic head and plastic washer (PA6)	- 40 up to + 60	**50E80-*AGV**
		Stainless steel with plastic head and plastic washer (PA6)	- 40 up to + 60	**50E80-*CP**
Plastic Wing Head 	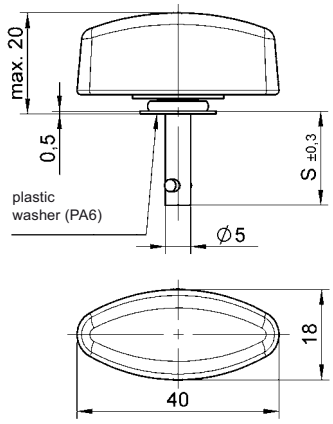	Steel / zinc-plated, CrVI-free, clear passivation with plastic head and plastic washer (PA6)	- 40 up to + 60	**50E82-*AGV**
		Stainless steel with plastic head and plastic washer (PA6)	- 40 up to + 60	**50E82-*CP**

* Length no. from Table, see page D-1.

Style	Dimensions	Materials / Finish	P	Part No.
Snap-In Grommet 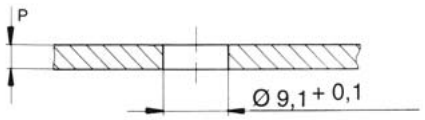 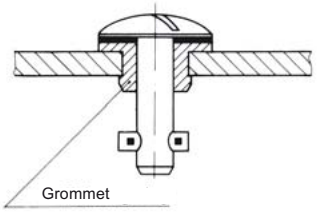	Grommet 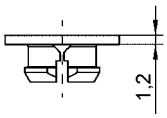 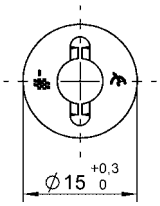	Plastic (PA6) / natural colour Working temperature: -40°C + 100°C	Up to 1,60 1,70- 2,80 2,90 - 4,00 4,10 - 5,30 5,40 - 6,65	**50S12-0-1AA** **50S12-1-1AA** **50S12-2-1AA** **50S12-3-1AA** **50S12-4-1AA**
Retaining Washer 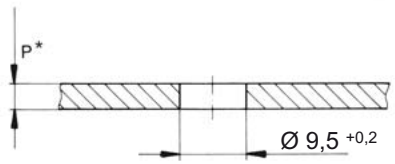 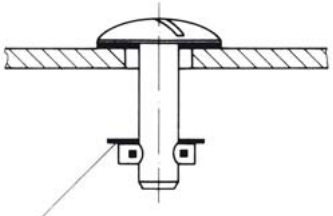 *For P up to 2mm Ø 8 +0,2 for installation without retaining washer	Retaining washer 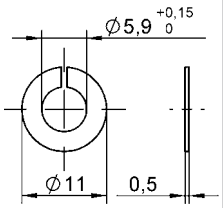 Retaining washer 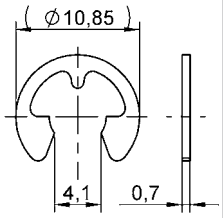 Retaining washer 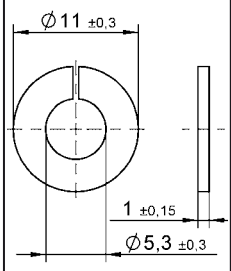	Stainless steel Stainless steel Plastic (PA6) / natural colour Working temperature: -40°C + 120°C ADVANTAGE: Plastic retaining washer can be assembled without tooling		**4002-SW-SS** **50E2-3BP** **50W204-01K**

Style	Dimensions	Materials / Finish	Panel Thickness P	°C	Part No.
Snap-In 	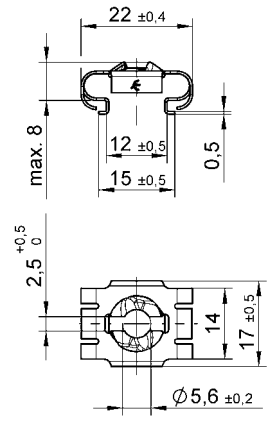	Spring steel / zinc-flake coated Spring steel / zinc-flake coated Max. tensile strength 250 N	F = 1,0 - 2,0 F = 2,1 - 3,0	170 170	**50E20-1AK7 (Type 1)** **50E20-2AK7 (Type 2)**
Clip-On 	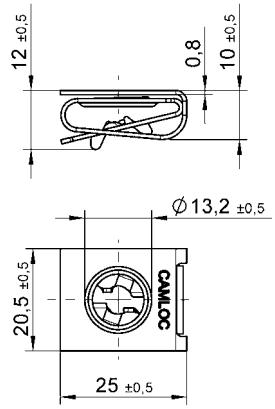	Spring steel / zinc-flake coated	F = 0,8 - 5,6	170	**V50R4-2-1AK7 (Type 3)**

Receptacle Installation Instructions

Installation Dimensions

Snap-In

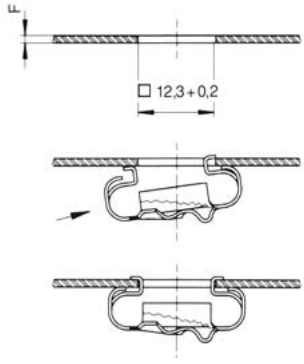

Clip-On

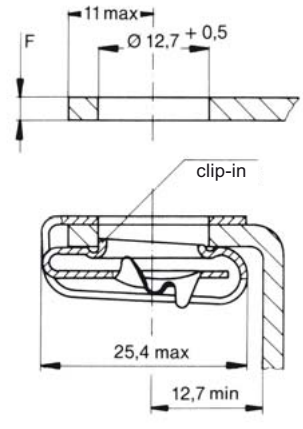

50F Series

Features

Max. tensile strength 3.700 N, working load 2.600 N.
Small fastener giving high tensile load.
Flat receptacle.
High preload.

Selection Instructions

1. Select stud assembly and receptacle, page E-2 to E-4 and E-6.
2. Select retaining washer, page E-5.
3. Select stud length number from total thickness G using the formula and table below (e.g. 50E8-*AGV).

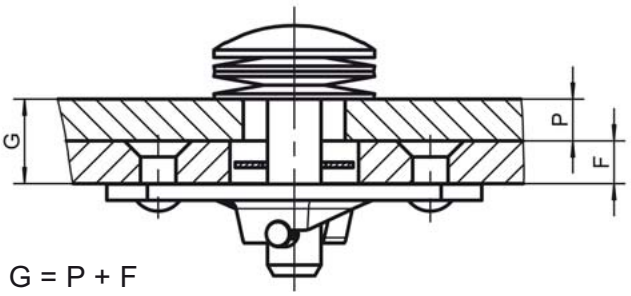

G = P + F

Stud Length Table

Total Thickness G	Stud Length No.
0,50 - 1,10	2
1,10 - 1,70	3
1,70 - 2,30	4
2,30 - 2,90	5
2,90 - 3,50	6
3,50 - 4,10	7
4,10 - 4,70	8
4,70 - 5,30	9
5,30 - 5,90	10
5,90 - 6,50	11
6,50 - 7,10	12
7,10 - 7,70	13
7,70 - 8,30	14
8,30 - 8,90	15
8,90 - 9,50	16
9,50 - 10,10	17
10,10 - 10,70	18

Total Thickness G	Stud Length No.
10,70 - 11,30	19
11,30 - 11,90	20
11,90 - 12,50	21
12,50 - 13,10	22
13,10 - 13,70	23
13,70 - 14,30	24
14,30 - 14,90	25
14,90 - 15,50	26
15,50 - 16,10	27
16,10 - 16,70	28
16,70 - 17,30	29
17,30 - 17,90	30
17,90 - 18,50	31
18,50 - 19,10	32
19,10 - 19,70	33
19,70 - 20,30	34
20,30 - 20,90	35

Other lengths on request.

Preferred dash-lengths

Style	Dimensions	Materials / Finish	°C	Part No.
Slotted Recess Head 	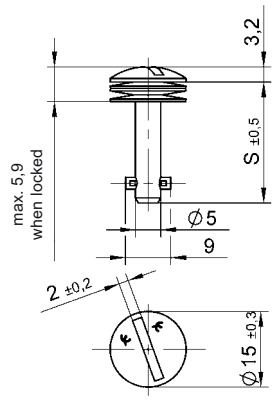 S = 11,4 + (0,6 x length no.)	Steel / zinc-plated, CrVI-free, clear passivation Stainless steel [1]	120 200	**50E8-*AGV** **50E8-*S**
Cross Recess Head 	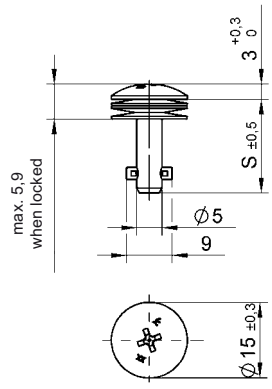 S = 11,4 + (0,6 x length no.)	Steel / zinc-plated, CrVI-free, clear passivation	120	**50E71-*AGV**
Hex Head Slotted Recess 	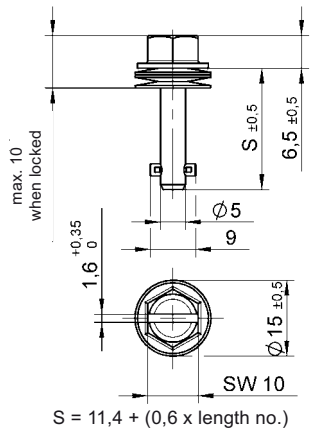 S = 11,4 + (0,6 x length no.)	Steel / zinc-plated, CrVI-free, clear passivation	120	**50E91-*AGV**

* Length no. from Table, page E-1.

[1] Max. tensile strength 2.600 N, working load 1.700 N.

Style	Dimensions	Materials / Finish	°C	Part No.
Hex Recess Head 	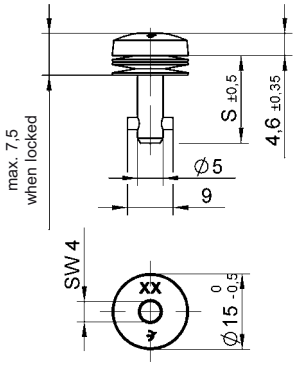 S = 11,4 + (0,6 x length no.)	Steel / zinc-plated, CrVI-free, clear passivation	120	**50E61-*AGV**
Fixed Wing Head 	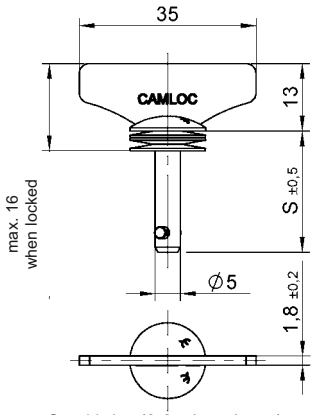 S = 11,4 + (0,6 x length no.)	Steel / zinc-plated, CrVI-free, clear passivation Stainless steel [1]	120 200	**50E8-*WAGV** **50E8-*WS**
Offset Fixed Wing Head 	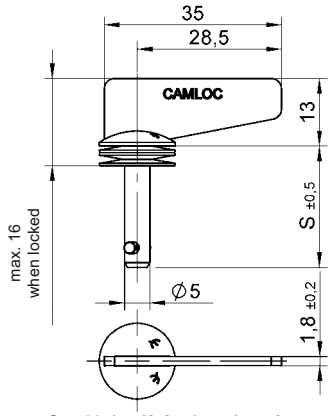 S = 11,4 + (0,6 x length no.)	Steel / zinc-plated, CrVI-free, clear passivation	120	**50E8-*W0AGV**

* Length no. from Table, page E-1.
[1] Max. tensile strength 2.600 N, working load 1.700 N.

Style	Dimensions	Materials / Finish	°C	Part No.
Folding Bail Handle 180° 	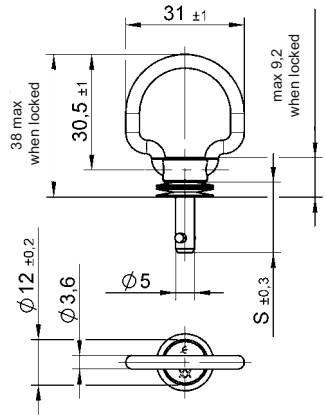	Steel / zinc-plated, CrVI-free, clear passivation	120	**50E19-*AGV**
Star Form Head 	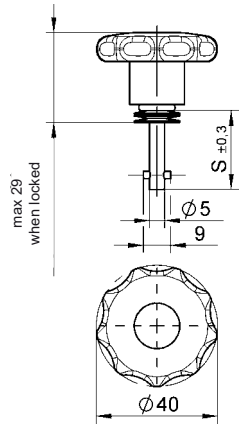	Steel / zinc-plated, CrVI-free, clear passivation with plastic knob (PA 6) Stainless steel [1] with plastic knob	-40 up to +60 -40 up to +60	**50E81-*AGV** **50E81-*CP**
Wing Head 	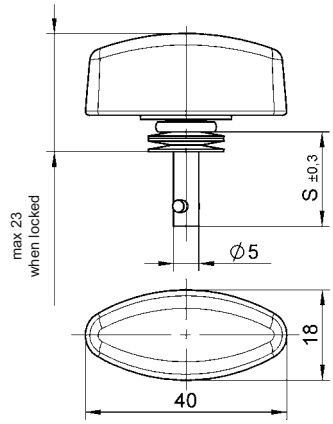	Steel / zinc-plated, CrVI-free, clear passivation with plastic knob (PA 6) Stainless steel [1] with plastic knob	-40 up to +60 -40 up to +60	**50E83-*AGV** **50E83-*CP**
Square Head 	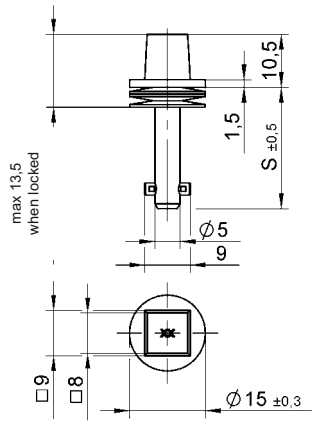	Steel / zinc-plated, CrVI-free, clear passivation	120	**50E7-*AGV**

* Length no. from Table, page E-1.

[1] Max. tensile strength 2.600 N, working load 1.700 N.

50F Series
Stud Assemblies Installation Instructions

Installation Dimensions	Accessories	Material / Finish	Part No.
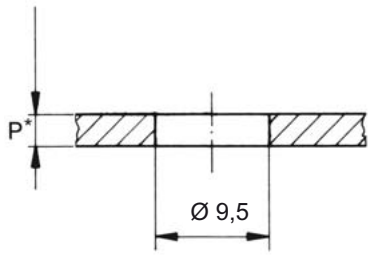	Retaining washer (loose) 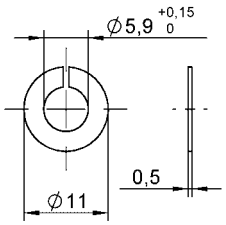	Stainless steel	**4002-SW-SS**
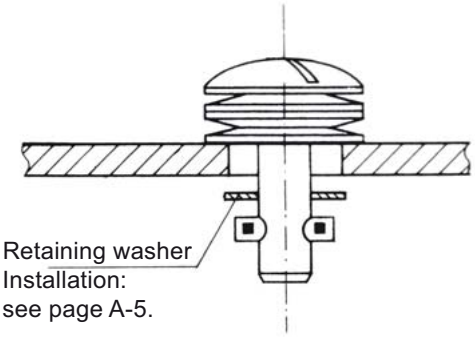	Retaining washer (fixed) 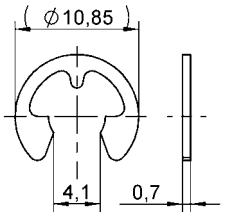	Stainless steel	**50E2-3BP**
	Retaining washer (loose) 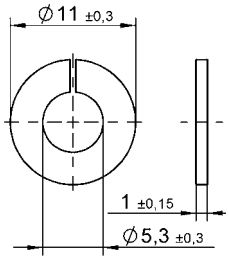	Plastic (PA6) / natural colour Working temperature: -40°C + 120°C ADVANTAGE: Plastic retaining washer to be assembled without tooling.	**50W204-01K**

*For P up to 2 mm Ø 8 $^{+0,2}$ for installation without retaining washer

Style	Dimensions	Materials / Finish	°C	Part No.
Rivet- / Screw or Weld Mounting 	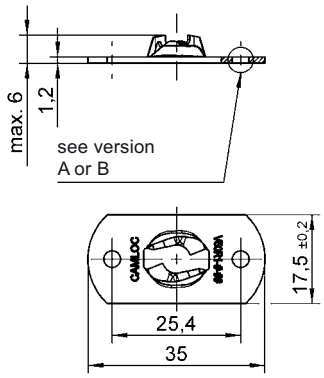 Version A Rivet/Screw Mounting 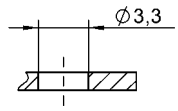 Version B Welding 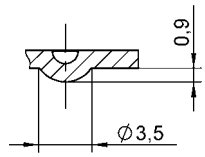	**Rivet / Screw Mounting** Steel / zinc-plated, CrVI-free, clear passivation Stainless steel **Welding** Steel / zinc-plated Steel / oil coated	 120 200 - -	 **V50R1-1-1AGV** **V50R1-1-1BP** **V50R1-1-2AZ** **V50R1-1-2AR**

Receptacle Installation Instructions

Installation Dimensions

Rivet- / Screw or Weld Mounting

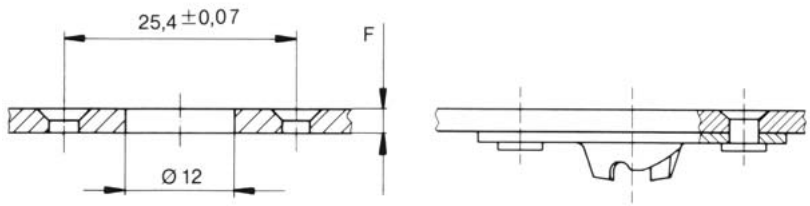

Features
Max. tensile strength 1.330 N, working load 900 N.
Small fastener giving a high tensile load.
Wide range of stud head styles and receptacles.

Selection Instructions
1. Select stud assembly and receptacle, page F-3 up to F-5, F-7 up to F-10.
2. Select stud accessories (retaining washer, gasket), page F-6 and F-7.
3. Select hex nut for receptacle, if necessary, page F-11.
4. Select stud length number from total thickness G using the formula and table on page F-2 (e.g. V26S01-*AGV).

Determining the stud length number when using receptacle:

Type 1 + 3*

G = P + F

* For Type 3: G = 9,9 mm min.

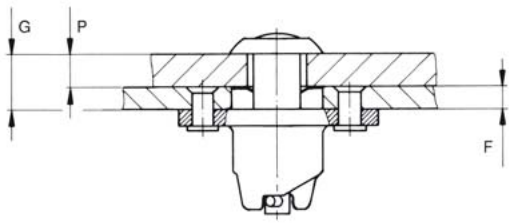

Type 2

G = P + F (0,75 min.)

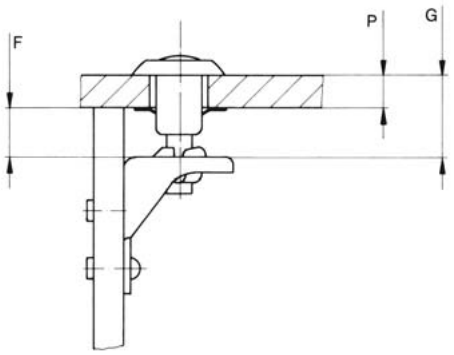

Type 4

G = P + X (0,5 min.)

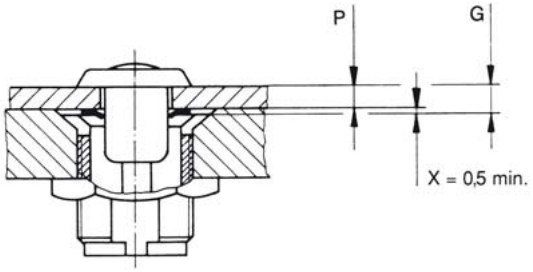

Camloc®
Traditionally Innovative

2600/2700 Series
Stud Length Table

Total Thickness G	Stud Length No. When Using **Type 1** Receptacles
0,75 - 1,50	1
1,50 - 2,30	2
2,30 - 3,05	3
3,05 - 3,80	4
3,80 - 4,60	5
4,60 - 5,35	6
5,35 - 6,10	7
6,10 - 6,85	8
6,85 - 7,60	9
7,60 - 8,40	10
8,40 - 9,15	11
9,15 - 9,90	12
9,90 - 10,65	13
10,65 - 11,40	14
11,40 - 12,20	15
12,20 - 12,95	16
12,95 - 13,70	17
13,70 - 14,50	18
14,50 - 15,25	19
15,25 - 16,00	20
16,00 - 16,75	21
16,75 - 17,50	22
17,50 - 18,30	23
18,30 - 19,05	24
19,05 - 19,80	25
19,80 - 20,60	26
20,60 - 21,35	27
21,35 - 22,10	28
22,10 - 22,85	29
22,85 - 23,60	30
23,60 - 24,40	31
24,40 - 25,15	32
25,15 - 25,90	33
25,90 - 26,65	34
26,65 - 27,40	35
27,40 - 28,20	36
28,20 - 28,95	37
28,95 -29,70	38
29,70 - 30,50	39
30,50 - 31,25	40

Total Thickness G	Stud Length No. When Using **Type 2 + 4** Receptacles
0,75 - 1,50	2
1,50 - 2,30	3
2,30 - 3,05	4
3,05 - 3,80	5
3,80 - 4,60	6
4,60 - 5,35	7
5,35 - 6,10	8
6,10 - 6,85	9
6,85 - 7,60	10
7,60 - 8,40	11
8,40 - 9,15	12
9,15 - 9,90	13
9,90 - 10,65	14
10,65 - 11,40	15
11,40 - 12,20	16
12,20 - 12,95	17
12,95 - 13,70	18
13,70 - 14,50	19
14,50 - 15,25	20
15,25 - 16,00	21
16,00 - 16,75	22
16,75 - 17,50	23
17,50 - 18,30	24
18,30 - 19,05	25
19,05 - 19,80	26
19,80 - 20,60	27
20,60 - 21,35	28
21,35 - 22,10	29
22,10 - 22,85	30
22,85 - 23,60	31
23,60 - 24,40	32
24,40 - 25,15	33
25,15 - 25,90	34
25,90 - 26,65	35
26,65 - 27,40	36
27,40 - 28,20	37
28,20 - 28,95	38
28,95 -29,70	39
29,70 - 30,50	40

Total Thickness G	Stud Length No. When Using **Type 3** Receptacles
9,90 - 10,65	1
10,65 - 11,40	2
11,40 - 12,20	3
12,20 - 12,95	4
12,95 - 13,70	5
13,70 - 14,50	6
14,50 - 15,25	7
15,25 - 16,00	8
16,00 - 16,75	9
16,75 - 17,50	10
17,50 - 18,30	11
18,30 - 19,05	12
19,05 - 19,80	13
19,80 - 20,60	14
20,60 - 21,35	15
21,35 - 22,10	16
22,10 - 22,85	17
22,85 - 23,60	18
23,60 - 24,40	19
24,40 - 25,15	20
25,15 - 25,90	21
25,90 - 26,65	22
26,65 - 27,40	23
27,40 - 28,20	24
28,20 - 28,95	25
28,95 -29,70	26
29,70 - 30,50	27
30,50 - 31,25	28
31,25 - 32,00	29
32,00 - 32,75	30
32,75 - 33,50	31
33,50 - 34,30	32
34,30 - 35,05	33
35,05 - 35,80	34
35,80 - 36,60	35
36,60 - 37,35	36
37,35 - 38,10	37
38,10 - 38,85	38
38,85 - 39,60	39
39,60 - 40,40	40

Other lengths on request.

Preferred dash-lengths

Style	Dimensions	Materials / Finish	°C	Part No.
Slotted Recess Pan Head 	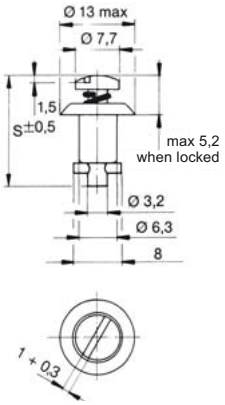 S = 18,54 + (0,76 x length no.)	Steel / zinc-plated, CrVI-free, clear passivation	120	**V26S01-*AGV**
		Steel / chrome-plated	120	**26S38-***
		Stainless steel [1]	200	**2600-*S**
		Steel / nickel-plated	120	**26S42-***
Cross Recess Pan Head 	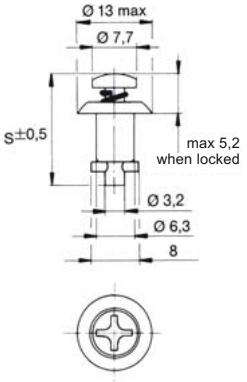 S = 18,54 + (0,76 x length no.)	Steel / zinc-plated, CrVI-free, clear passivation	120	**V26S02-*AGV**
		Steel / nickel-plated	120	**26S39-***
		Stainless steel [1]	200	**26S51-***
Knurled Head 	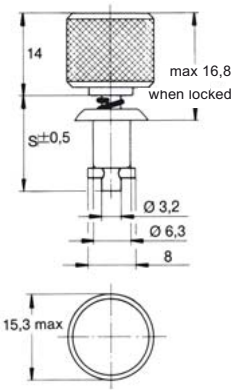 S = 16,76 + (0,76 x length no.)	Steel / chrome-plated	120	**26S34-***
Fixed Wing Head 	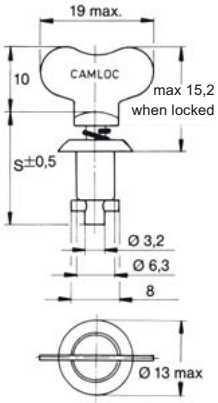 S = 18,54 + (0,76 x length no.)	Steel / zinc-plated, CrVI-free, clear passivation	120	**V26S04-*AGV**
		Stainless steel [1]	200	**2600-*SW**

* Length no. from Table, page F-2.

[1] Max. Tensile strength 1.000 N, working load 700 N.

Style	Dimensions	Materials / Finish	°C	Part No.
Star Form Head 	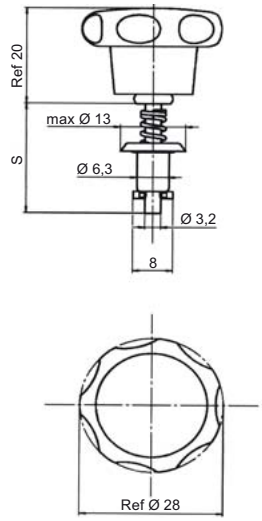	Steel / zinc-plated, CrVI-free, clear passivation with plastic knob (PA6) Note: Not to be used with encapsulated receptacles	-40 up to +60	**V26S06- *AGV**
Wing Head 	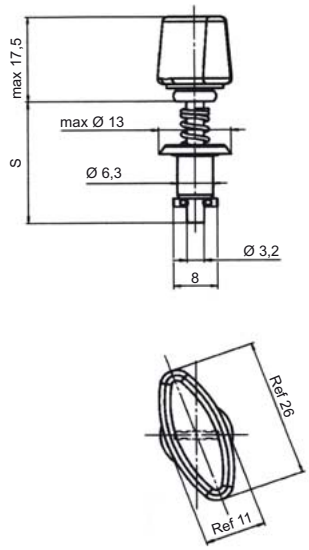	Steel / zinc-plated, CrVI-free, clear passivation with plastic knob (PA6) Note: Not to be used with encapsulated receptacles	-40 up to +60	**V26S07- *AGV**
Triangular Head 	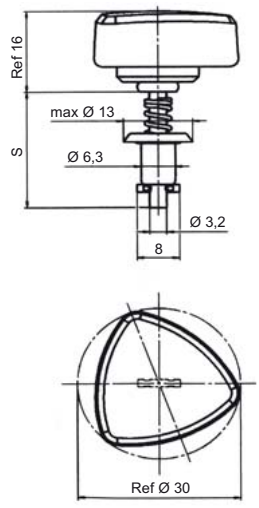	Steel / zinc-plated, CrVI-free, clear passivation with plastic knob (PA6) Note: Not to be used with encapsulated receptacles	-40 up to +60	**V26S08- *AGV**

* Length no. from Table, page F-2.

Style	Dimensions	Materials / Finish	°C	Part No.
Slotted Recess Flush Head 	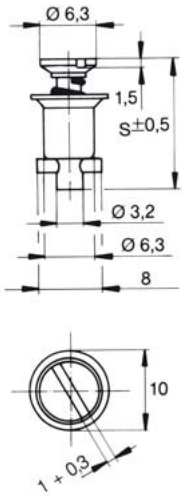 S = 14,73 + (0,76 x length no.)	Steel / zinc-plated, CrVI-free, clear passivation Stainless steel [1]	120 200	**V27S01-*AGV** **2700-*S**
Cross Recess Flush Head 	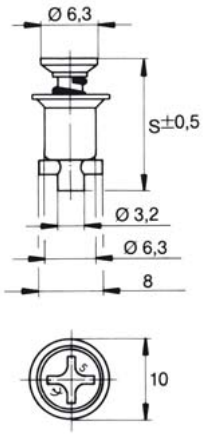 S = 14,73 + (0,76 x length no.)	Steel / zinc-plated, CrVI-free, clear passivation	120	**V27S02-*AGV**

* Length no. from Table, page F-2.
[1] Max. Tensile strength 1.000 N, working load 700 N.

Installation Dimensions	Accessories	Material / Finish	Part No.
Stud Retention without Retaining Washer, Retention Type 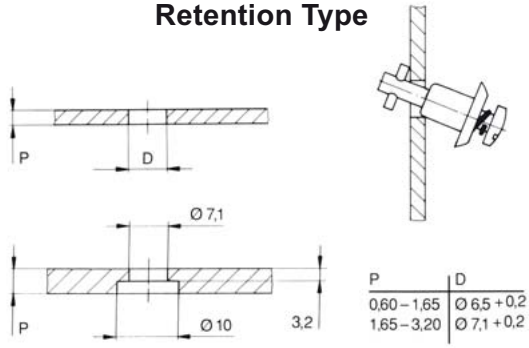 4P3-1 installation pliers, see page F-7.	-	- Note: Dash “4“ stud and smaller are self-captivating	-
Stud Retention without Retaining Washer, Floating Type 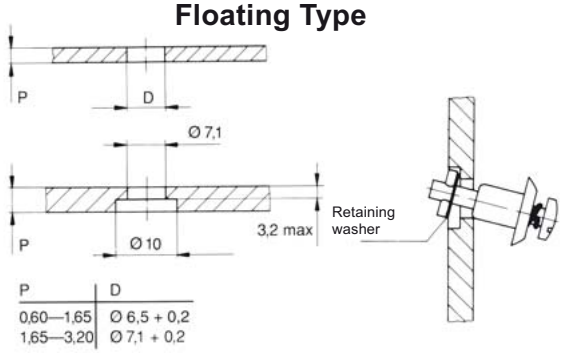 4P3-1 installation pliers, see page F-7.	Retaining washer 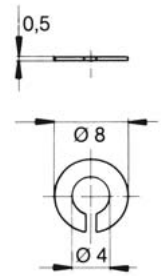	Stainless steel Note: Retaining rings are required for stud length dash numbers “5“ and up	**2600-SW**
Stud Retention with Retaining Washer, Fixed Spring Cup 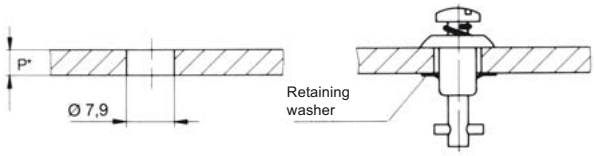 *P = 0,5 - 4,75 4P3-1 installation pliers, see page F-7.	Retaining washer 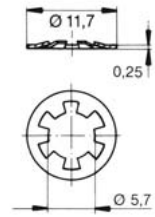	Stainless steel Not for chrome-plated parts	**V2600-LW-7**
Sealed (for 2600 series with panhead only) 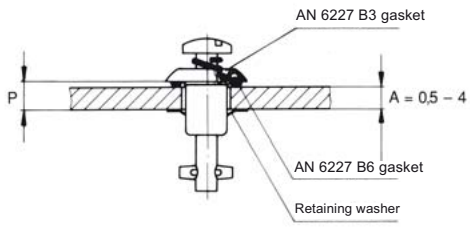 P = A + 0,75 T98-1 installation tool, page F-6. Installation see page A-5. 4P3-1 installation pliers, see page F-7.	Gaskets 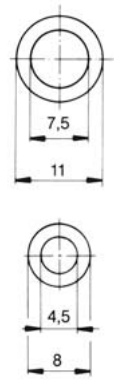	Rubber (100°C) Rubber (100°C)	**AN6227-B6** **AN6227-B3**

Installation Dimensions	Accessories	Material / Finish	Part No.
Stud Retention without a Retaining Washer, Retention Type 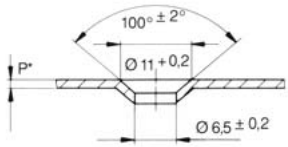  * P = 0,5 - 3,2 Installation tool see below	-	- Note: Dash “4“ stud and smaller are self-captivating	-
Stud Retention without a Retaining Washer, Floating Type 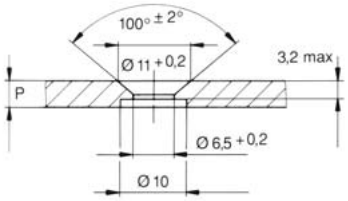 Installation: see page A-5 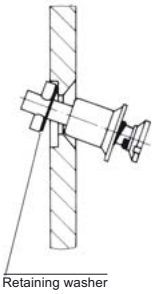 Installation tool see below	Retaining washer 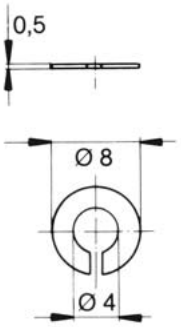 	Stainless steel Note: Retaining rings are required for stud length dash numbers “5“ and up	**2600-SW**
Stud Retention with a Retaining Washer, Fixed Spring Cup 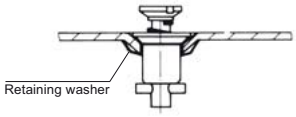 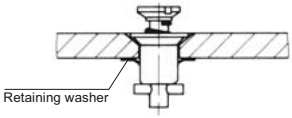 Installation: see page A-5 Installation tool see below	Retaining washer 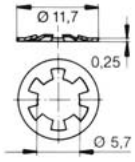 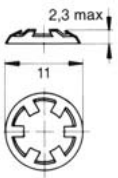 	Stainless steel Steel / nickel-plated	**V2600-LW-7** **V27W01-1AN**
	**Stud Installation pliers**		**4P3-1**
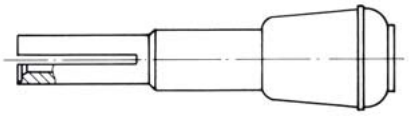	**V2600-LW-7 retaining washer installation tool**		**T98-1**

Style	Dimensions	Materials / Finish	D	°C	Part No.
Type 1 Lightweight 	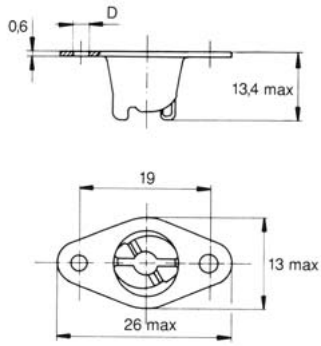	Steel / zinc-plated, CrVI-free, clear passivation	2,6	120	**V26R6-1AGV**
Type 1 Cast 	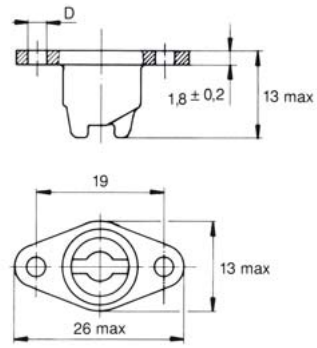	Hard bronze / zinc-plated, CrVI-free, clear passivation Hard bronze / zinc-plated, CrVI-free, clear passivation Stainless steel	2,5 3,3 2,5	120 120 200	**V212-12-1FGV** **V212-12-2FGV** **212-12S**
Type 1 Narrow Width 	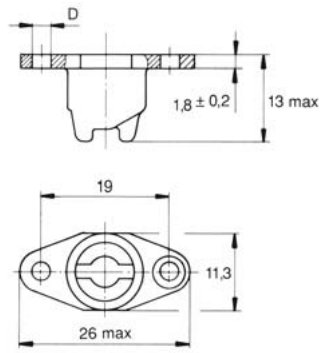	Hard bronze / zinc-plated, CrVI-free, clear passivation	2,5	120	**V212-12N-1FGV**
Type 1 Encapsulated 	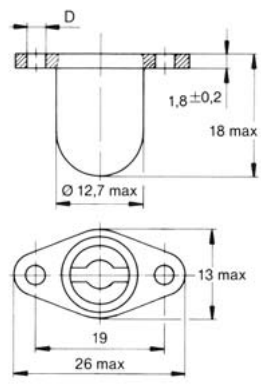	Hard bronze / zinc-plated, CrVI-free, clear passivation Capsule: Steel / zinc-plated, CrVI-free, clear passivation Stainless steel	2,5 2,5	120 150	**26R16-1FGV** **26R18-1-1AA**

Style	Dimensions	Materials / Finish	°C	Part No.
Type 2 **Side Mounting** 	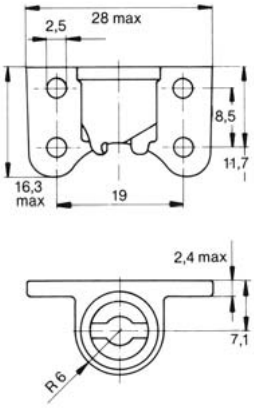	Aluminium / anodized	175	**26R1-1**
Type 3 **Rivet / Screw or** **Weld Mounting** 	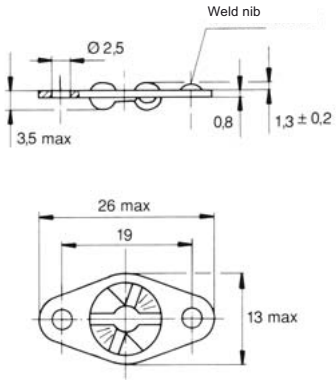	**Rivet / Screw Mounting** Steel / zinc-plated, CrVI-free, clear passivation Stainless steel **Welding** Stainless steel	120 200 -	**V312-12AGV** **312-12S** **312-12WS**

Style	Dimensions	Materials / Finish	°C	Part No.
Type 4 Single Hole Mounting 	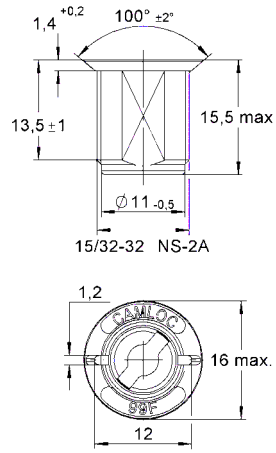	Zinc die cast / zinc-plated, CrVI-free, clear chromate	100	**99R10-01A1**
Type 4 Single Hole Mounting Encapsulated 	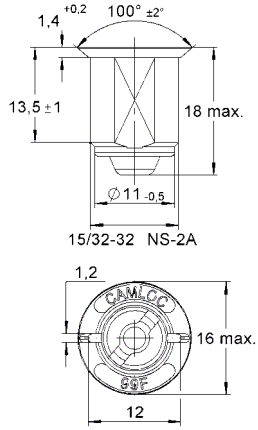	Zinc die cast / zinc-plated, CrVI-free, clear chromate Capsule: Stainless steel	100	**99E10-01**

Installation Dimensions
Type 1 + 3 Receptacles Hole Pattern
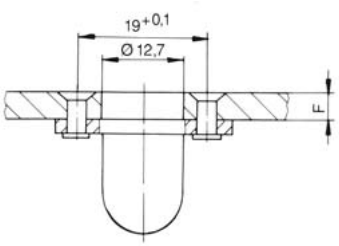
Type 2 Receptacle Hole Pattern (Side Mounting)
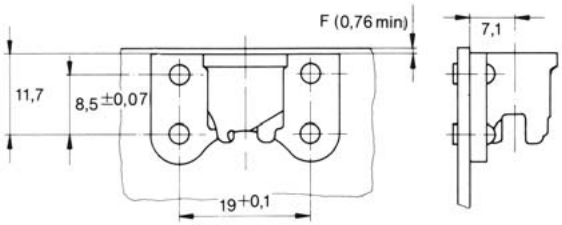

Installation Dimensions	Accessories	Materials / Finish	Part No.
Installation Options Type 4 Receptacle 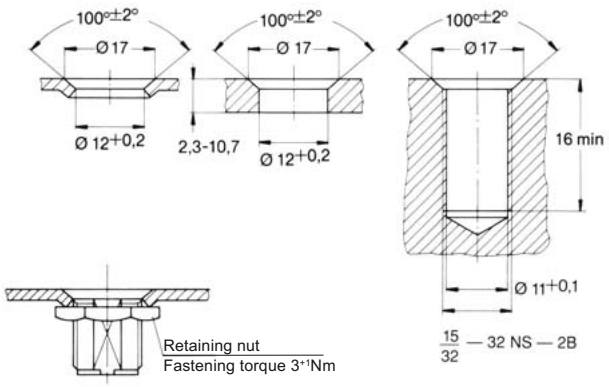	Retaining nut 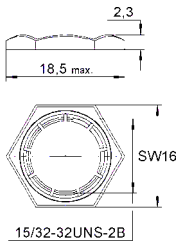 Tap	Steel / zinc-plated, CrVI-free, clear chromate	**99N10-01A1** **15/32-32NS-2B**

D 4002 Series

Features
Max. tensile strength 4.700 N, working load 3.100 N.
Small fastener for high tensile load.
Large range of stud assembles with fixed and floating receptacles

Selection Instructions
1. Select stud assembly, page G-4 and G-5, grommet and snap-on retaining ring, page G-7 and receptacle, page G-8 and G-9.
2. Select retaining washer, page G-6, for studs from length no. 5.
3. Select stud length number from total thickness G using the formula and the table on page G-2 and G-3 (e.g. D 4002-*AGV).

Determining the stud length number when using receptacle:

Standard version

Type 1 + 2

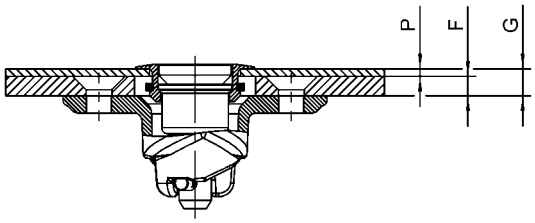

G = P + F

Type 3

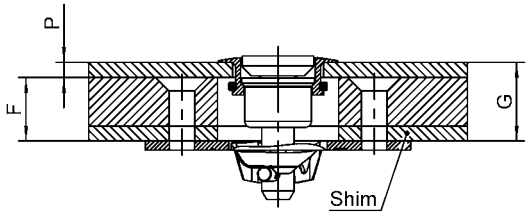

G = P + F (8,9 min.)

Sealed version

Type 1 + 2

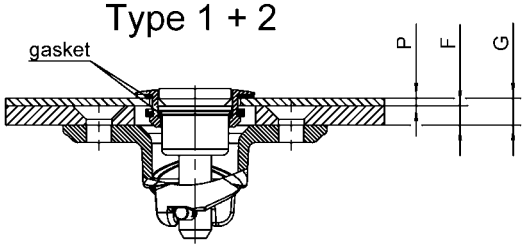

G = P + F + 0,75

Type 3

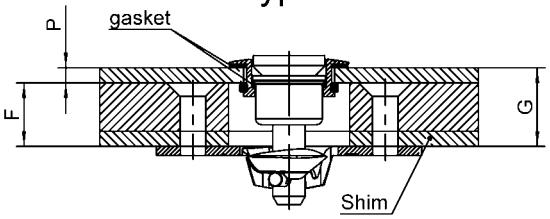

G = P + F (8,9 min.) + 0,75

D 4002 Series
Stud Length Table

When Using the Following Grommet and Receptacles:

Flush Mounting Grommets
D4002-G-AGV D4002-H-AGV

Total Thickness G	Stud Length No. When Using **Type 1** Receptacles	Total Thickness G	Stud Length No. When Using **Type 2** Receptacles	Total Thickness G	Stud Length No. When Using **Type 3** Receptacles
0,50 - 1,30	-	0,50 - 1,30	-	8,90 - 9,65	2
1,30 - 2,05	-	1,30 - 2,05	2	9,65 - 10,40	3
2,05 - 2,80	2	2,05 - 2,80	3	10,40 - 11,20	4
2,80 - 3,55	3	2,80 - 3,55	4	11,20 - 11,95	5
3,55 - 4,30	4	3,55 - 4,30	5	11,95 - 12,70	6
4,30 - 5,10	5	4,30 - 5,10	6	12,70 - 13,50	7
5,10 - 5,85	6	5,10 - 5,85	7	13,50 - 14,20	8
5,85 - 6,60	7	5,85 - 6,60	8	14,20 - 15,00	9
6,60 - 7,30	8	6,60 - 7,30	9	15,00 - 15,75	10
7,30 - 8,15	9	7,30 - 8,15	10	15,75 - 16,50	11
8,15 - 8,90	10	8,15 - 8,90	11	16,50 - 17,30	12
8,90 - 9,65	11	8,90 - 9,65	12	17,30 - 18,00	13
9,65 - 10,40	12	9,65 - 10,40	13	18,00 - 18,80	14
10,40 - 11,20	13	10,40 - 11,20	14	18,80 - 19,55	15
11,20 - 11,95	14	11,20 - 11,95	15	19,55 - 20,30	16
11,95 - 12,70	15	11,95 - 12,70	16	20,30 - 21,10	17
12,70 - 13,50	16	12,70 - 13,50	17	21,10 - 21,85	18
13,50 - 14,20	17	13,50 - 14,20	18	21,85 - 22,60	19
14,20 - 15,00	18	14,20 - 15,00	19	22,60 - 23,40	20
15,00 - 15,75	19	15,00 - 15,75	20	23,40 - 24,15	21
15,75 - 16,50	20	15,75 - 16,50	21	24,15 - 24,90	22
16,50 - 17,30	21	16,50 - 17,30	22	24,90 - 25,65	23
17,30 - 18,00	22	17,30 - 18,00	23	25,65 - 26,40	24
18,00 - 18,80	23	18,00 - 18,80	24	26,40 - 27,20	25
18,80 - 19,55	24	18,80 - 19,55	25	27,20 - 27,95	26
19,55 - 20,30	25	19,55 - 20,30	26	27,95 - 28,70	27
20,30 - 21,10	26	20,30 - 21,10	27	28,70 - 29,50	28
21,10 - 21,85	27	21,10 - 21,85	28	29,50 - 30,20	29
21,85 - 22,60	28	21,85 - 22,60	29	30,20 - 31,00	30
22,60 - 23,40	29	22,60 - 23,40	30	31,00 - 31,75	31
23,40 - 24,15	30	23,40 - 24,15	31	31,75 - 32,50	32
24,15 - 24,90	31	24,15 - 24,90	32	32,50 - 33,30	33
24,90 - 25,65	32	24,90 - 25,65	33	33,30 - 34,05	34
25,65 - 26,40	33	25,65 - 26,40	34	34,05 - 34,80	35
26,40 - 27,20	34	26,40 - 27,20	35		
27,20 - 27,95	35				

Other lengths on request.

Preferred dash-lengths

D 4002 Series
Stud Length Table

When Using the Following Grommet and Receptacles:

Plus Flush Mounting Grommets
D4002-N-AGV D4002-O-AGV
D4002-P-AGV

Total Thickness G	Stud Length No. When Using **Type 1** Receptacles	Total Thickness G	Stud Length No. When Using **Type 2** Receptacles	Total Thickness G	Stud Length No. When Using **Type 3** Receptacles
0,50 - 1,30	1	0,50 - 1,30	2	8,90 - 9,65	3
1,30 - 2,05	2	1,30 - 2,05	3	9,65 - 10,40	4
2,05 - 2,80	3	2,05 - 2,80	4	10,40 - 11,20	5
2,80 - 3,55	4	2,80 - 3,55	5	11,20 - 11,95	6
3,55 - 4,30	5	3,55 - 4,30	6	11,95 - 12,70	7
4,30 - 5,10	6	4,30 - 5,10	7	12,70 - 13,50	8
5,10 - 5,85	7	5,10 - 5,85	8	13,50 - 14,20	9
5,85 - 6,60	8	5,85 - 6,60	9	14,20 - 15,00	10
6,60 - 7,30	9	6,60 - 7,30	10	15,00 - 15,75	11
7,30 - 8,15	10	7,30 - 8,15	11	15,75 - 16,50	12
8,15 - 8,90	11	8,15 - 8,90	12	16,50 - 17,30	13
8,90 - 9,65	12	8,90 - 9,65	13	17,30 - 18,00	14
9,65 - 10,40	13	9,65 - 10,40	14	18,00 - 18,80	15
10,40 - 11,20	14	10,40 - 11,20	15	18,80 - 19,55	16
11,20 - 11,95	15	11,20 - 11,95	16	19,55 - 20,30	17
11,95 - 12,70	16	11,95 - 12,70	17	20,30 - 21,10	18
12,70 - 13,50	17	12,70 - 13,50	18	21,10 - 21,85	19
13,50 - 14,20	18	13,50 - 14,20	19	21,85 - 22,60	20
14,20 - 15,00	19	14,20 - 15,00	20	22,60 - 23,40	21
15,00 - 15,75	20	15,00 - 15,75	21	23,40 - 24,15	22
15,75 - 16,50	21	15,75 - 16,50	22	24,15 - 24,90	23
16,50 - 17,30	22	16,50 - 17,30	23	24,90 - 25,65	24
17,30 - 18,00	23	17,30 - 18,00	24	25,65 - 26,40	25
18,00 - 18,80	24	18,00 - 18,80	25	26,40 - 27,20	26
18,80 - 19,55	25	18,80 - 19,55	26	27,20 - 27,95	27
19,55 - 20,30	26	19,55 - 20,30	27	27,95 - 28,70	28
20,30 - 21,10	27	20,30 - 21,10	28	28,70 - 29,50	29
21,10 - 21,85	28	21,10 - 21,85	29	29,50 - 30,20	30
21,85 - 22,60	29	21,85 - 22,60	30	30,20 - 31,00	31
22,60 - 23,40	30	22,60 - 23,40	31	31,00 - 31,75	32
23,40 - 24,15	31	23,40 - 24,15	32	31,75 - 32,50	33
24,15 - 24,90	32	24,15 - 24,90	33	32,50 - 33,30	34
24,90 - 25,65	33	24,90 - 25,65	34	33,30 - 34,05	35
25,65 - 26,40	34	25,65 - 26,40	35		
26,40 - 27,20	35				

Other lengths on request.

Preferred dash-lengths

D 4002 Series
Stud Assemblies

Style	Dimensions	Materials / Finish	°C	Part No.
Slotted Recess Head 	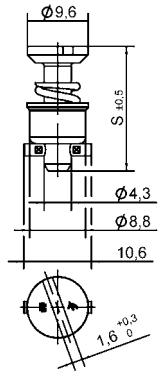 S = 16,00 + (0,76 x length no.)	Steel / zinc-plated, CrVI-free, clear passivation	120	**D4002-*AGV**
Cross Recess Head 	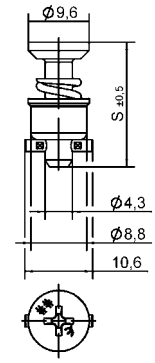 S = 16,00 + (0,76 x length no.)	Steel / zinc-plated CrVI-free, clear passivation	120	**D40S5-*AGV**
Fixed Wing Head 	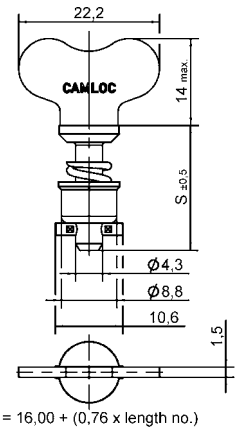 S = 16,00 + (0,76 x length no.)	Steel / zinc-plated, CrVI-free, clear passivation	120	**D4002-*WAGV**
180° Folding Bail Handle 	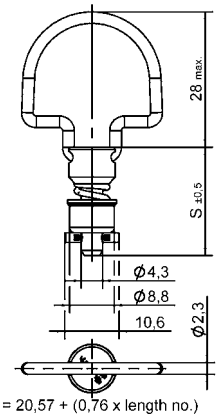 S = 20,57 + (0,76 x length no.)	Steel / zinc-plated, CrVI-free, clear passivation	120	**D40S47-*AGV**

* Length no. from Table, page G-2 and G-3

D 4002 Series
Stud Assemblies

Style	Dimensions	Materials / Finish	°C	Part No.
Hex Recess Head 	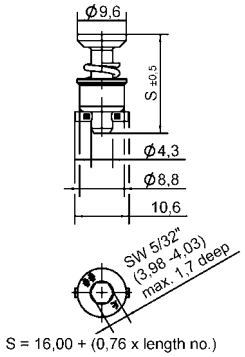 S = 16,00 + (0,76 x length no.)	Steel / zinc-plated, CrVI-free, clear passivation	120	**D40E28- *AGV**
Sealed Slotted Recess Head 	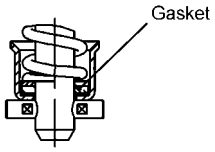 Additional required gasket see page G-4	Steel / zinc-plated, CrVI-free, clear passivation Gasket: Rubber Available in Stud Length no. 4 and above	100	**D4002I-*AGV**
Sealed Cross Recess Head 	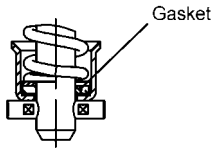 Additional required gasket see page G-4	Steel / zinc-plated, CrVI-free, clear passivation Gasket: Rubber Available in Stud Length no. 4 and above	100	**D40S5I-*AGV**

Installation Dimensions	Accessories	Materials / Finish	Part No.
Gasket to be ordered in addition to the sealed stud assembly 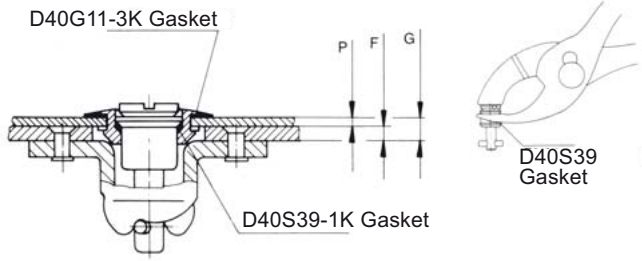	Gasket 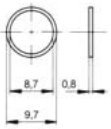 Gasket 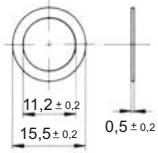	Plastic / (PA6) EPDM black	**D40S39-1K** **D40G11-3K**

* Length no. from Table, page G-2 and G-3

D 4002 Series
Stud Assemblies

Installation Dimensions	Accessories	Materials / Finish	Part No.
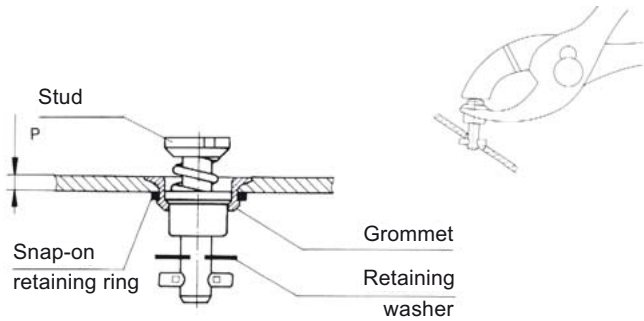 4P3-1 installation pliers, see below	retaining ring loose on stud use for stud length no. 5 and up 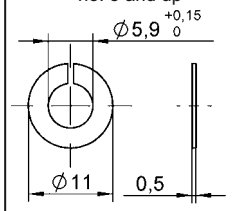 retaining ring loose on stud use for stud length no. 5 and up 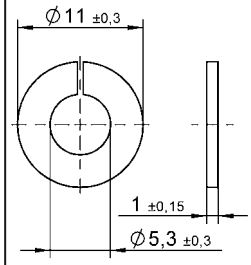	Stainless steel Plastic	**4002-SW-SS** **50W204-01K**
	**Stud installation pliers**		**4P3-1**
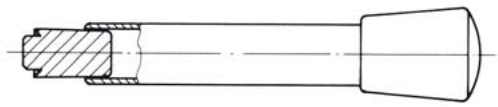	**R4G-* and V40G26-1N snap-on retaining ring installation tool**		**T26**

Style	Dimensions	Materials / Finish	°C	Part No.
Plus Flush Mounting **For Panel Thickness up to 1,65** 	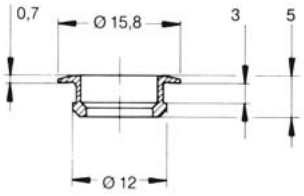	Steel / zinc-plated, CrVI-free, clear passivation	120	**D4002-N-AGV**
Plus Flush Mounting **For Panel Thickness from 1,65 to 2,40** 	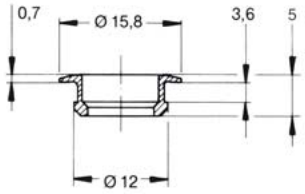	Steel / zinc-plated, CrVI-free, clear passivation	120	**D4002-O-AGV**
Plus Flush Mounting **For Panel Thickness from 2,40 to 3,20** 	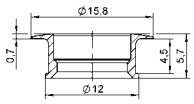	Steel / zinc-plated, CrVI-free, clear passivation	120	**D4002-P-AGV**
Flush Mounting **For Panel Thickness up to 1,65** 	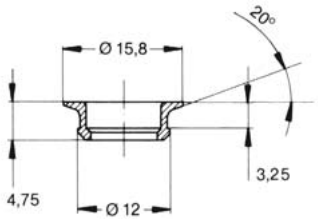	Steel / zinc-plated, CrVI-free, clear passivation	120	**D4002-G-AGV**
Flush Mounting **For Panel Thickness from 1,65 to 2,18** 	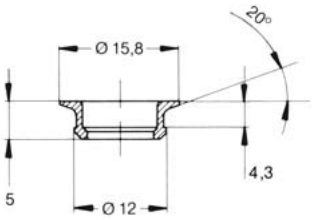	Steel / zinc-plated, CrVI-free, clear passivation	120	**D4002-H-AGV**

Grommets for thicker panels upon request.

Installation Dimensions	Accessories	Materials / Finish	Part No.
Grommet, Plus Flush Mounting 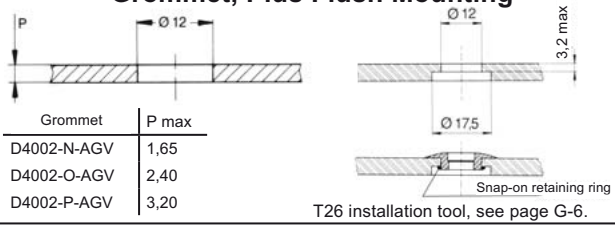 T26 installation tool, see page G-6.	Snap-on retaining ring 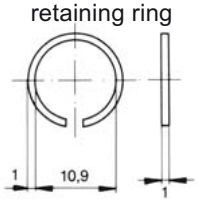	Steel / zinc plated, CrVI-free, clear passivation	**R4G-3**
Grommet, Flush Mounting 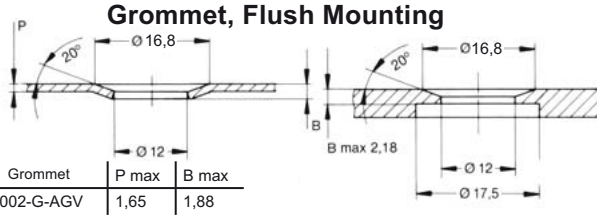 T26 installation tool, see page G-6.			

Grommet	P max	B max
D4002-G-AGV	1,65	1,88
D4002-H-AGV	2,18	2,97

Grommet	P max
D4002-N-AGV	1,65
D4002-O-AGV	2,40
D4002-P-AGV	3,20

Style	Dimensions	Materials / Finish	°C	Part No.
Type 1 Cast 	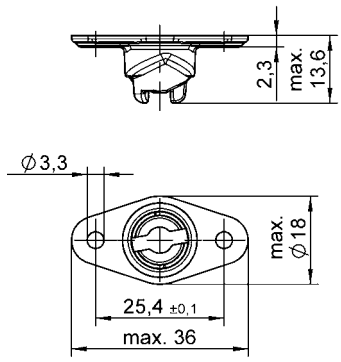	Hard bronze / zinc-plated, CrVI-free, clear passivation	120	**D214-16FGV**
Type 1 Cast Narrow Width 	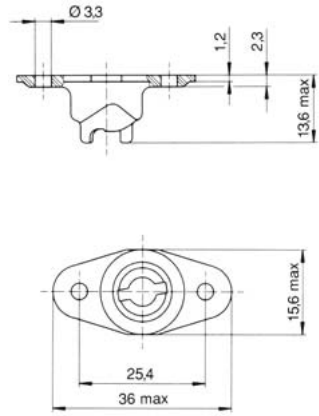	Hard bronze / zinc-plated, CrVI-free, clear passivation	120	**D214-16NFGV**
Type 1 Cast Encapsulated 	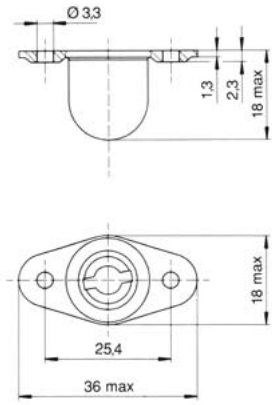	Hard bronze / zinc-plated, CrVI-free, clear passivation Capsule: Brass / zinc-plated, CrVI-free, clear passivation	150	**D40R12-1FGV**

Style	Dimensions	Materials / Finish	°C	Part No.
Type 2 Float up to 0,75 mm* (Cast Receptacle) 	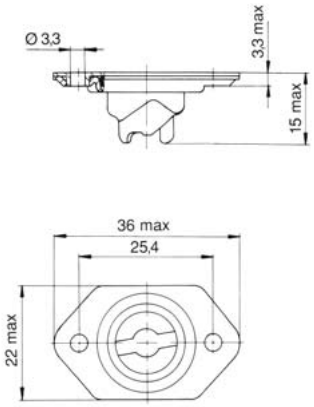	Hard bronze / zinc-plated, CrVI-free, clear passivation Cage: Steel / zinc-plated, CrVI-free, clear passivation	120	**D244-16-FGV**
Type 2 Float up to 0,75 mm* Encapsulated 	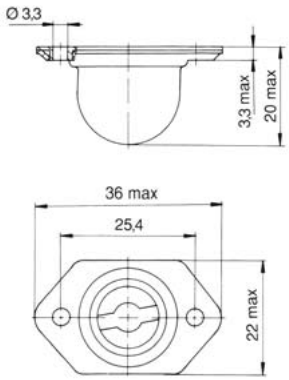	Hard bronze / zinc-plated, CrVI-free, clear passivation Capsule: Steel / zinc-plated, CrVI-free, clear passivation	120	**D244-16C-FGV**
Type 3 Flat Rivet / Screw or Weld Mounting 	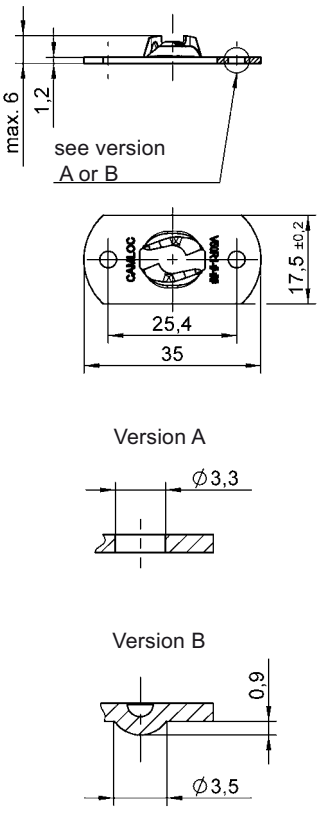	**Rivet / Screw Mounting** Hard bronze / zinc-plated, CrVI-free, clear passivation **Welding** Steel / zinc-plated	120 - -	**V50R1-1-1AGV** **V50R1-1-2AZ** **V50R1-1-2AR**

Installation Dimensions

Types 1, 2 and 3
Receptacle Hole Pattern

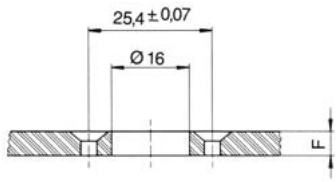

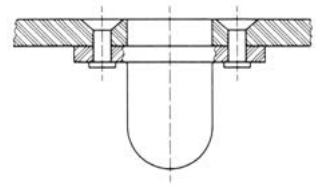

991F Series

Features
Max. tensile strength 10.000 N, working load 7.000 N.
High tensile strength and preload.
Typical applications:
Commercial vehicles, coaches, agricultural machinery, chemical engineering, heating systems etc.

1. Select stud assembly and receptacle, pages H-2, H-3 and H-5.
2. Sealed: Also select rubber gasket and buffer plate, page H-4.
3. Select retaining washer, page H-4.
4. Select stud length number from total thickness G using the formula and table below (e.g. 991S01-*AGV).

Determining the stud length number when using:

Rivet, Screw and Weld Mounting Receptacle

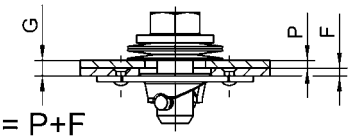

G = P+F

Sealed Stud Assemblies

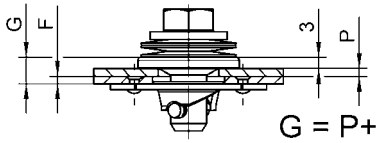

G = P+F+3

Clip-On Receptacle

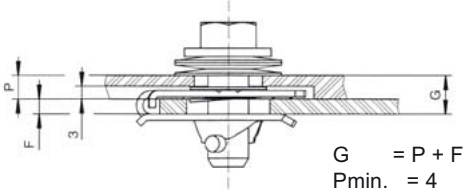

G = P + F
Pmin. = 4
F = 1,5 - 3,5

Stud Length Table

Total Thickness G	Stud Length No.
0,90 - 1,65	1
1,65 - 2,40	2
2,40 - 3,15	3
3,15 - 3,95	4
3,95 - 4,70	5
4,70 - 5,45	6
5,45 - 6,20	7
6,20 - 7,00	8
7,00 - 7,75	9
7,75 - 8,50	10
8,50 - 9,25	11
9,25 - 10,05	12
10,05 - 10,80	13
10,80 - 11,55	14
11,55 - 12,30	15
12,30 - 13,10	16
13,10 - 13,85	17
13,85 - 14,60	18
14,60 - 15,35	19
15,35 - 16,15	20
16,15 - 16,90	21
16,90 - 17,65	22
17,65 - 18,40	23
18,40 - 19,20	24
19,20 - 19,95	25
19,95 - 20,70	26
20,70 - 21,45	27
21,45 - 22,25	28
22,25 - 23,00	29
23,00 - 23,75	30
23,75 - 24,50	31
24,50 - 25,25	32
25,25 - 26,05	33
26,05 - 26,80	34
26,80 - 27,55	35
27,55 - 28,30	36
28,30 - 29,10	37
29,10 - 29,85	38
29,85 - 30,60	39
30,60 - 31,35	40
31,35 - 32,15	41
32,15 - 32,90	42
32,90 - 33,65	43
33,65 - 34,40	44
34,40 - 35,20	45
35,20 - 35,95	46
35,95 - 36,70	47
36,70 - 37,45	48
37,45 - 38,25	49
38,25 - 39,00	50

Other lengths on request.

Preferred dash-lengths

991F Series
Stud Assemblies

Style	Dimensions	Materials / Finish	°C	Part No.
Hex Head Slotted Recess 	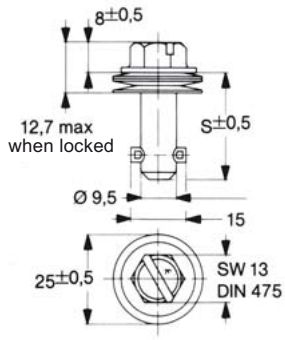 S = 16,26 + (0,76 x length no.)	Steel / zinc-plated, CrVI-free, clear passivation Stainless steel [1]	120 200	**991S01- *-1AGV** **991S01- *-1BP**
Fixed Wing Head 	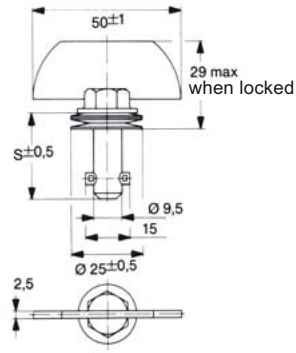 S = 16,26 + (0,76 x length no.)	Steel / zinc-plated, CrVI-free, clear passivation	120	**991S02- *-1AGV**
Offset Fixed Wing Head 	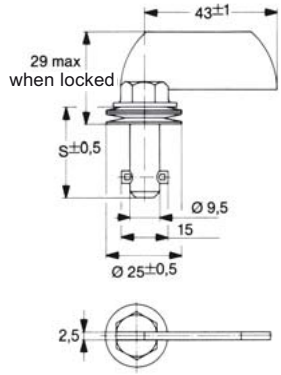 S = 16,26 + (0,76 x length no.)	Steel / zinc-plated, CrVI-free, clear passivation	120	**991S03- *-1AGV**
180° Folding Wing Head 	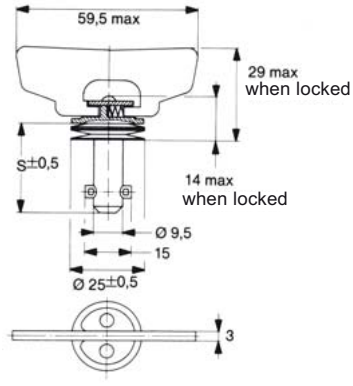 S = 16,26 + (0,76 x length no.)	Steel / zinc-plated, CrVI-free, clear passivation	120	**991S05- *-1AGV**

* Length no. from Table, see page H-1.

[1] Max. tensile strength 7.000 N, working load 4.500 N.

Style	Dimensions	Materials / Finish	°C	Part No.
Hex Recess Head 	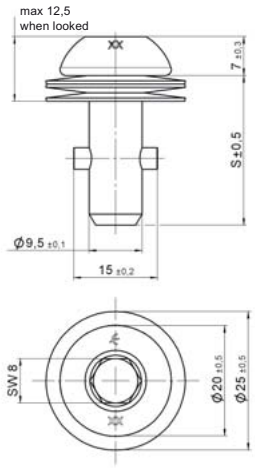	Steel / zinc-plated, CrVI-free, clear passivation	120	**991S30-*AGV**
Folding Bail Handle 180° 	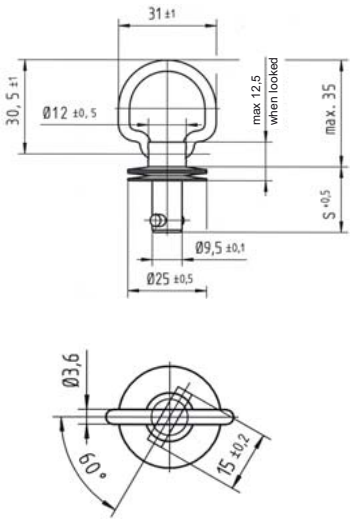 S = 15,03 + (0,76 X length no.)	Steel / zinc-plated, CrVI-free, clear passivation	120	**991S2991-*AGV**

* Length no. from Table, see page H-1.

991F Series
Stud Installation Instructions

Installation Dimensions	Accessories	Material / Finish	Part No.
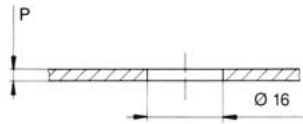	Retaining washer 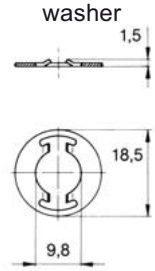	Stainless steel	**991W04-1BP**
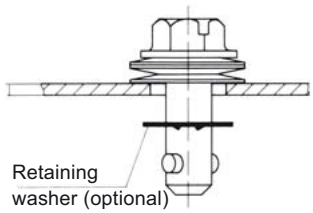	Slotted retaining washer 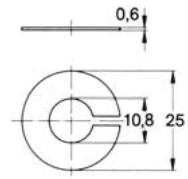	Stainless steel	**991W02-1BP**

Sealed Stud Assemblies

Installation Dimensions	Accessories	Material / Finish	Part No.
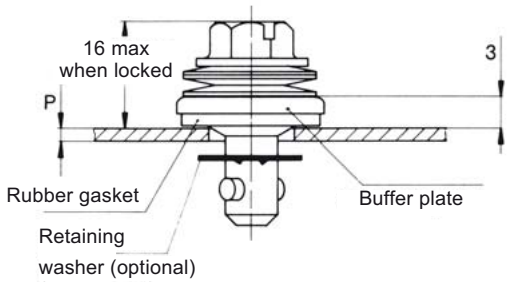	Buffer plate 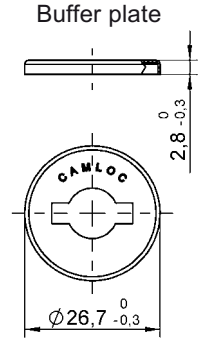	Stainless steel	**991W03-1BP**
	Rubber gasket 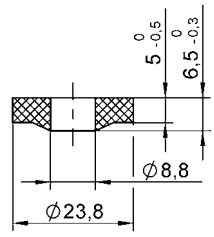	NBR black (100°C max.)	**991S17-1K**

Style	Dimensions	Materials / Finish	Mounting Ø	°C	Part No.
Rivet / Screw Mounting 	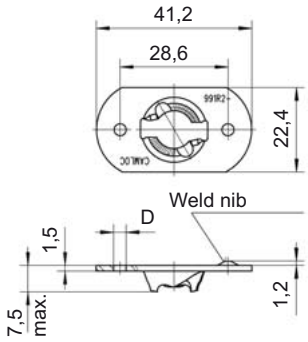	**Rivet / Screw Mounting** Steel / zinc-plated, CrVI-free, clear passivation	3,3	120	**991R2-1AGV**
		Steel / zinc-plated, CrVI-free, clear passivation	4,1	120	**991R2-3AGV**
		Stainless steel	3,3	200	**991R2-1BP**
		Stainless steel	4,1	200	**991R2-3BP**
		Welding Steel / zinc-plated	-	-	**991R2-2AZ**
		Steel / oil coated	-	-	**991R2-2AR**
Clip-On 	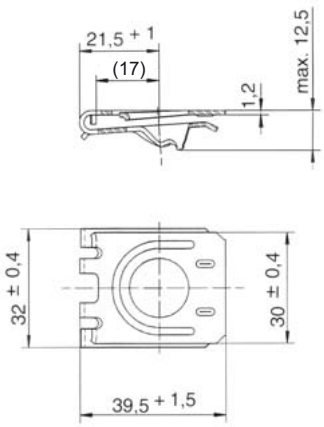	Steel / zinc-plated, zinc flake coated Frame thickness F= 1,5mm - 3,5mm		150	**991R6-1AK7**

Receptacle Installation Instructions

Installation Dimensions

Rivet / Screw or Welded Mounting

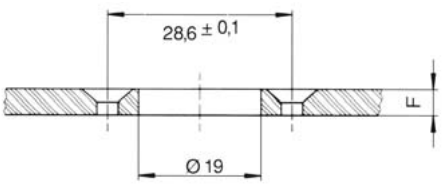

Clip-On

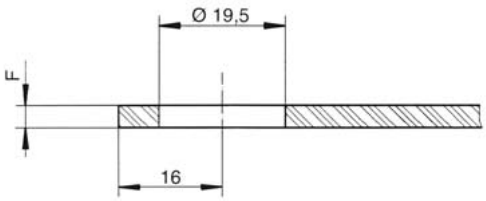

Camloc
Traditionally Innovative

One-Piece Fasteners

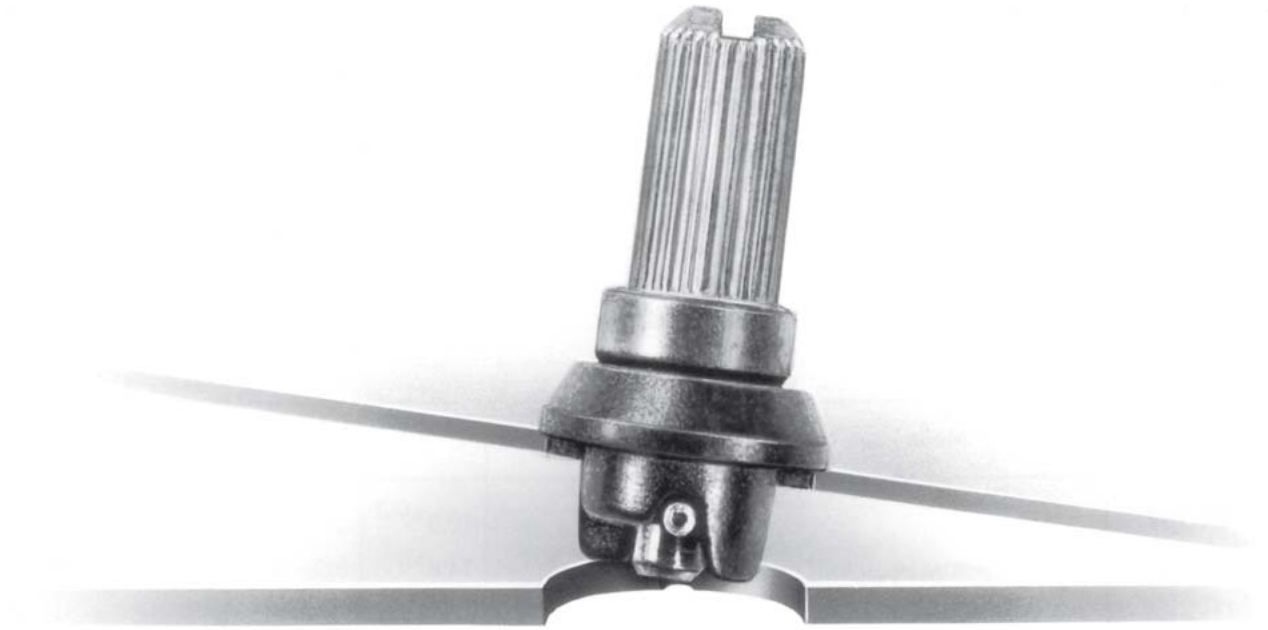

Camloc
Traditionally Innovative

V936F Series

Features

Max. tensile strength 300 N, working load 200 N.
Same hole shape for panel and frame.
Available in slotted recess or knurled head styles .
Fastener position indication by stud slot.
Stud assembly captive in the panel.
Vibration resistant.
Grip ranges from 2,0 mm to 4,6 mm.
Lock and unlock by a quarter turn.
Typical applications are in electro-mechanical and electronic equipment.
Quick installation without tools.

Part no. example

Knurled head for 3,3 mm to 4,6 mm grip range.

V936 S11 -4 -1 AA

- Material / Finish
- Variant
- Grip range
- Style
- Series

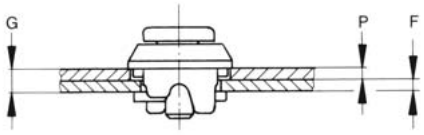

G = P + F
Pmin = 1,2 mm

Style	Dimensions	Materials / Finish	A	Grip Range G	°C	Part No.
Slotted Recess Head 	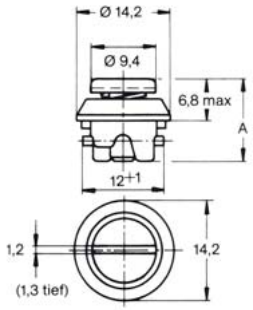	Stud, spiral pin: Steel / zinc-plated, CrVI-free, clear chromate Compression spring: Stainless steel Casing: Zinc die casting / zinc-plated, CrVI-free, clear chromate	12,3±0,3 14,8±0,3	2,0 - 3,2 3,3 - 4,6	100 100	**V936S05-3-1AA** **V936S05-4-1AA**
Knurled Head 	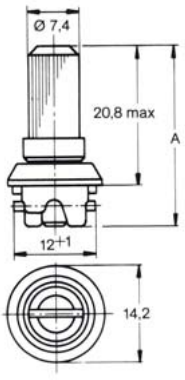	Stud, Casing: Zinc die casting / zinc-plated, CrVI-free, clear chromate Compression spring: Stainless steel Spiral pin: Steel / zinc-plated, CrVI-free, clear chromate	26,4 ±0,3 28,9 ±0,3	2,0 - 3,2 3,3 - 4,6	100 100	**V936S11-3-1AA** **V936S11-4-1AA**

Hole Shape in Panel P	Installing the fastener	The slot indicates the position of the fastener
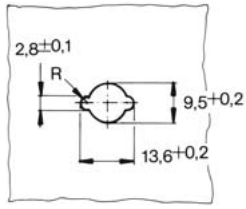	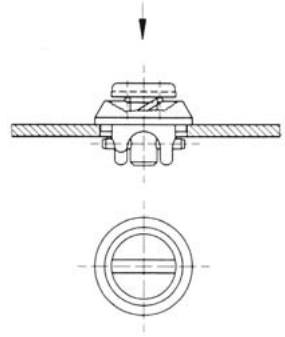	Unlocked 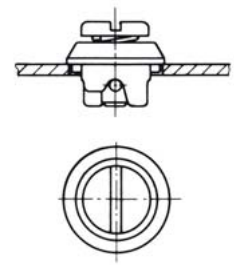
Hole Shape in Panel F	Fastener retained in panel	Locked
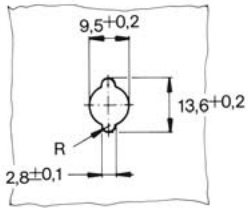	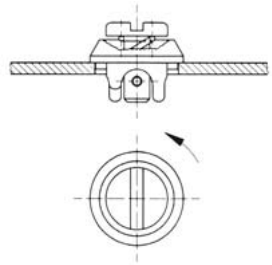	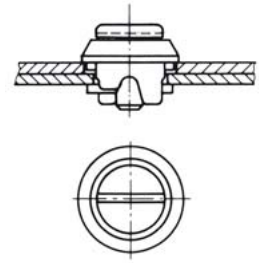

713F Series

Features
This fastener fastens panels in electrical switch cabinets (e.g. 19“-equipment) to modular bars.

Selection Instructions
The dimensions of the front panel and the modular bar as well as the colour determine the final design of the fastener.

To enable us to offer you the custom-tailored fastener, we need your drawings with the dimensions and tolerances of:
1. the front panel
2. the shape of the modular bar
3. the colour, if necessary
   In addition, please send us samples of your modular bar and front panel.

Part no. example
One-piece fastener

713 S* - * AE

- Materials / Finish
- Colour (as requested by the customer)
- Head style and design (as requested by the customer)
- Series

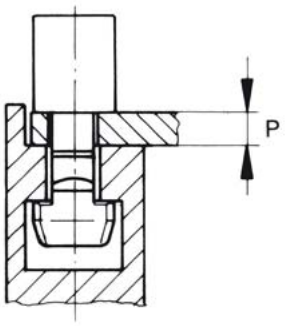

Style	Dimensions	Materials / Finish	°C	Part No.
Slotted Recess Head 	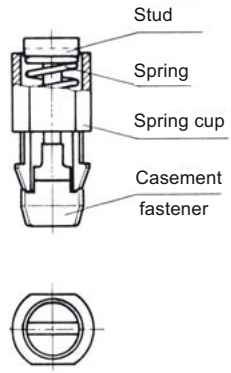	Spring cup: Plastic (POM) Stud: Steel / nickel-plated Spring: Steel / zinc-plated, CrVI-free, clear chromate Casement fastener: Zinc die casting / zinc-plated, CrVI-free, clear chromate	-25 up to +90	**713S*- *AE**
Knurled Head 	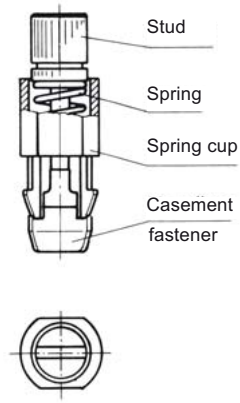	Spring cup: Plastic (POM) Stud: Steel / nickel-plated Spring: Steel / zinc-plated, CrVI-free, clear chromate Casement fastener: Zinc die casting / zinc-plated, CrVI-free, clear chromate	-25 up to +90	**713S*- *AE**

* Design and colour as requested by the customer.

Due to the various front panel thickness, hole shapes and modular bar shapes, it is not possible to offer one standard design. We will individually issue the final part number only after determining the front panel and modular bar dimensions and the colour.

Dimensions	Fastener Position
Installing the Fastener 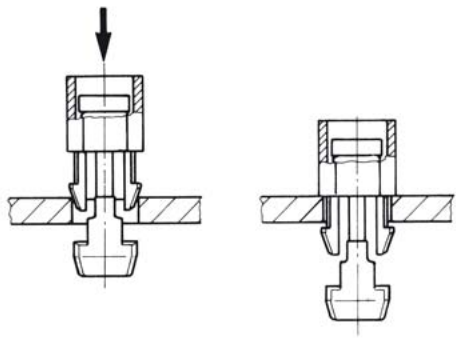	Unlocked Locked 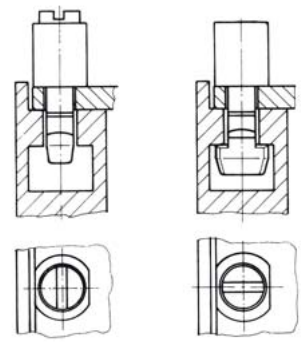 To lock push stud and turn 90°C.
1. Insert fastener with spring cup into hole. 2. Push stud until snap-in hooks lock in.	The slot indicates the position of the fastener.

Camloc
Traditionally Innovative

Push Button Fasteners



15F Series

Features

Max. tensile strength 1.330 N, working load 930 N.
Quick opening and closing by a push of the finger.
Easy installation with single hole mounting.

Selection Instructions

1. Select stud assembly, page K-2 and receptacle, page K-3.
2. Select retaining washer, page K-2 and retaining hexnut, page K-3, if necessary.
3. Select stud length number from Panel thickness P using the table below, insert into stud part number * (e.g. 15S1-*-1AD).

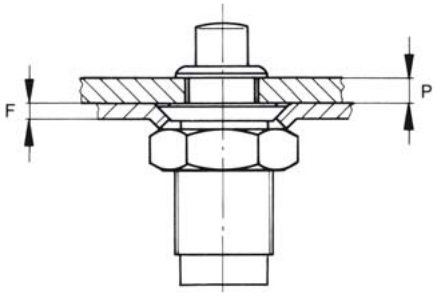

Stud Length Table

Panel Thickness P	Stud Length No.
0,7 - 2,3	1
2,3 - 3,8	3
3,8 - 5,3	5
5,3 - 6,9	7
6,9 - 8,4	9
8,4 - 9,9	11
9,9 - 11,4	13
11,4 - 13,0	15

Other lengths on request.

Preferred dash-lengths

Style	Dimensions	Materials / Finish	°C	Part No.
	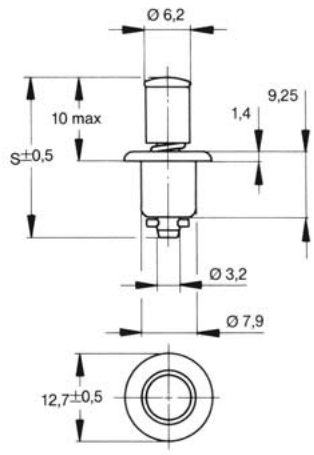 S=22,4 + (0,76 x length no.)	Steel / nickel-plated Steel / zinc-plated CrVI-free, clear passivation	120 120	**15S1- *-1AD** **15S1- *-1AJ**

* Length no. from Table, see page K-1.

Other lengths and surfaces can be ordered upon request.

Stud Installation Instructions

Installation Dimensions	Accessories	Materials / Finish	Part No.
Panel thickness up to 4,8 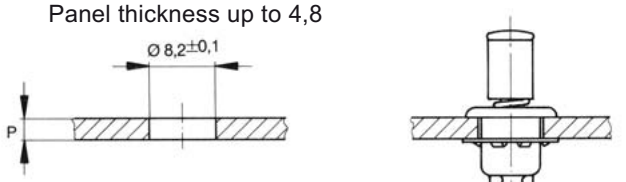 Panel thickness from 4,8 + up 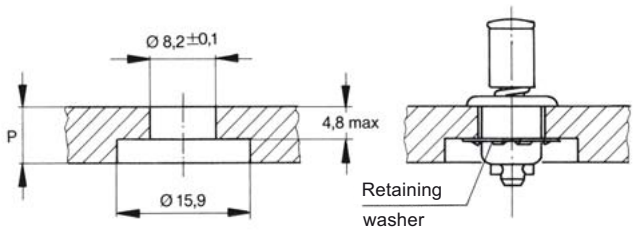	Retaining washer 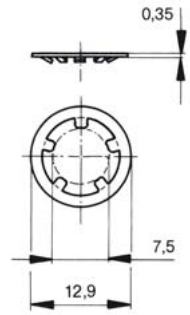	Stainless steel	**15S11-1CJ**
	**Installation Tool for 15S11-1CJ retaining washer**		**T107-1**

Style	Dimensions	Materials / Finish	°C	Part No.
	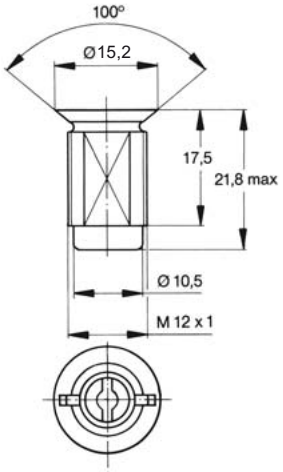	Zinc die casting / zinc-plated CrVI-free, clear passivation	120	**V15R13-1-1AB**

Receptacle Installation Instructions

Installation Dimensions	Accessories	Materials / Finish	Part No.
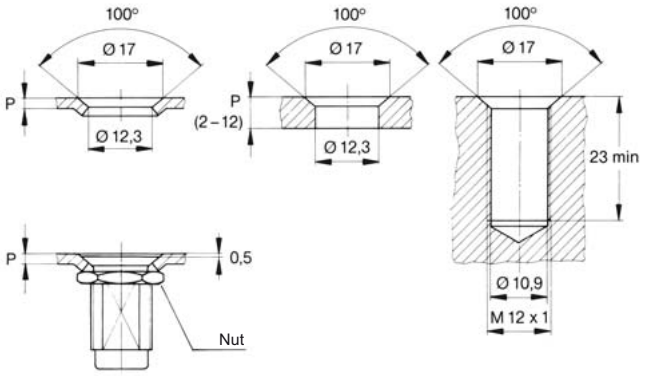	Hex Nut 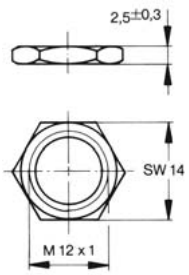	Steel / zinc-plated, CrVI-free, clear passivation	**V15R14-1-1AB**

Camloc
Traditionally Innovative

Push-Turn Fasteners



715F Series

Features
Max. tensile strength 700 N, working load 600 N.
Easy and economic clip-in installation for stud and receptacle.
Also suitable for automatic installation.
1/4 turn to open - close by a push of the finger.
Due to their small size they are particularly suited for use in electrical engineering and electronics.

Selection Instructions
1. Select stud assembly according to panel thickness P, page L-2 and spring clip according to frame thickness F, page L-3.
2. Select stud length number form panel thickness G using the table below, insert into stud part number * (e.g. 715S12-*-1BP).

Part no. example
Stud, slotted recess head

715 S12 -07 -3BP

- Material / Finish
- Panel thickness P
- Length No.
- Style
- Series

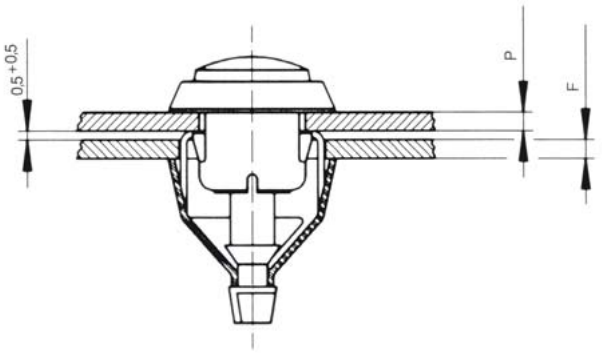

Stud Length Table

Panel Thickness P	Slotted Recess Head Stud Length No.	Knurled Head Stud Length No.	Panel Thickness P	Slotted Recess Head Stud Length No.	Knurled Head Stud Length No.
0,50 - 1,25	5	5	6,50 - 7,25	13	-
1,25 - 2,00	6	6	7,25 - 8,00	14	-
2,00 - 2,75	7	7	8,00 - 8,75	15	-
2,75 - 3,50	8	8	8,75 - 9,50	16	-
3,50 - 4,25	9	9	9,50 - 10,25	17	-
4,25 - 5,00	10	10	10,25 - 11,00	18	-
5,00 - 5,75	11	-	11,00 - 11,75	19	-
5,75 - 6,50	12	-	11,75 - 12,50	20	-

Other lengths on request.

Preferred dash-lengths

715F Series
Stud Assemblies

Style	Dimensions	Materials / Finish	Panel Thickness P	°C	Part No.
Slotted Recess Head 	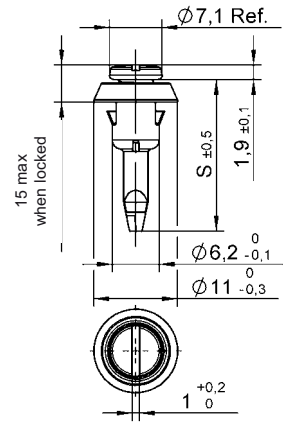 S = 13,25 + (0,75 x length no.)	Stainless steel Spring cup: Plastic (POM) / black	0,5 - 1,0 1,0 - 1,5 1,5 - 2,0	-25 up to +90	**715S12- *-1BP** **715S12- *-2BP** **715S12- *-3BP**
Knurled Head 	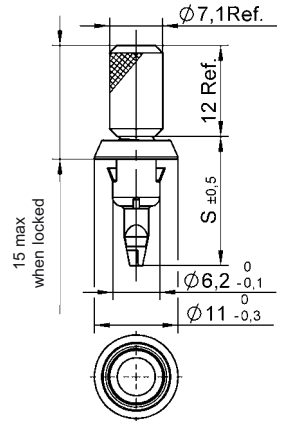 S = 13,25 + (0,75 x length no.)	Stainless steel Spring cup: Plastic (POM) / black	0,5 - 1,0 1,0 - 1,5 1,5 - 2,0	-25 up to +90	**715S13- *-1BP** **715S13- *-2BP** **715S13- *-3BP**

Stud Installation Instructions

Installation Dimensions

Panel up to 2 mm

Panel over 2 mm

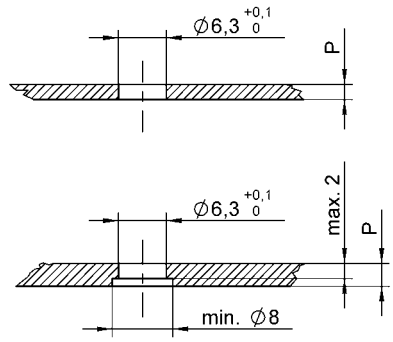

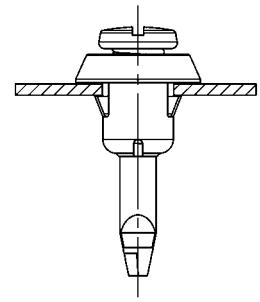

Style	Dimensions	Materials / Finish	Frame Thickness F	°C	Part No.
Receptacle 	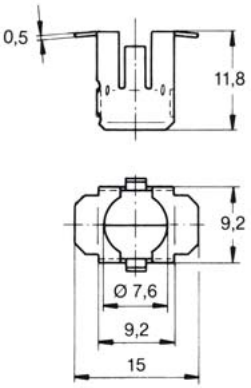	Stainless steel	0,5 - 1,0 1,0 - 1,5 1,5 - 2,0 2,0 - 2,5	-25 up to +90 (See stud assembly)	**715R02-1BP** **715R02-2BP** **715R02-3BP** **715R02-4BP**

Installation Instructions

Installation Dimensions

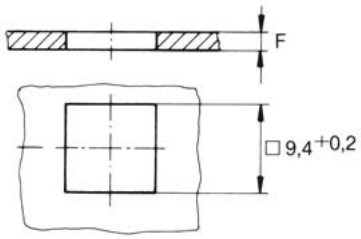

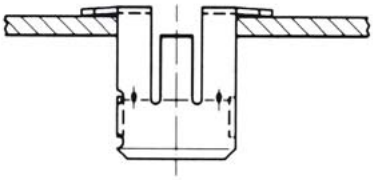

716F Series

Features
Max. tensile strength 1.400 N, working load 1.200 N.
Easy and economic clip-in installation for stud and receptacle.
Also suitable for automatic installation.
1/4 turn to open – close with a push of the finger.

Selection Instructions
1. Select stud assembly according to panel thickness P, page M-2 and spring clip according to frame thickness F, page M-3.
2. Select stud length number from panel thickness P using table below, insert into stud part number * (e.g. 716S12-*-1BP).

Part no. example
Stud, slotted recess head

716 S12 -03 -2BP

- Material / Finish
- Panel thickness P
- Length No.
- Style
- Series

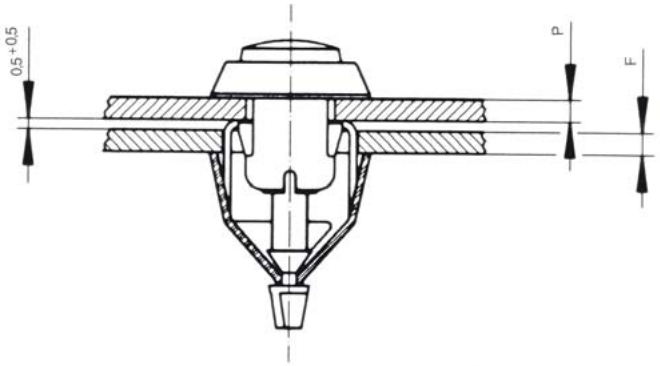

Stud Length Table

Panel Thickness P	Stud Length No.
1,0 - 2,0	02
2,0 - 3,0	03
3,0 - 4,0	04
4,0 - 5,0	05
5,0 - 6,0	06
6,0 - 7,0	07
7,0 - 8,0	08
8,0 - 9,0	09
9,0 - 10,0	10

Other lengths on request.

Preferred dash-lengths

716F Series
Stud Assemblies

Style	Dimensions	Materials / Finish	Panel Thickness P	°C	Part No.
Slotted Recess Head 	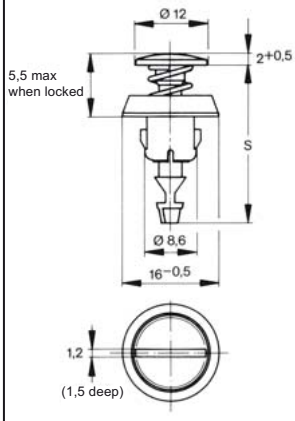 S = 18,5 + length no.	Stainless steel Spring cup: Plastic (POM) / black	0,5 - 1,0 1,0 - 1,5 1,5 - 2,0 2,0 - 2,5 2,5 - 3,0	-25 up to +90	**716S12- *-1BP** **716S12- *-2BP** **716S12- *-3BP** **716S12- *-4BP** **716S12- *-5BP**
Knurled Head 	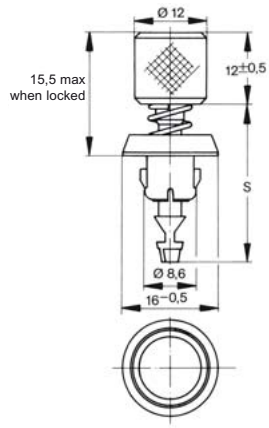 S = 18,5 + length no.	Stainless steel Spring cup: Plastic (POM) / black	0,5 - 1,0 1,0 - 1,5 1,5 - 2,0 2,0 - 2,5 2,5 - 3,0	-25 up to +90	**716S13- *-1BP** **716S13- *-2BP** **716S13- *-3BP** **716S13- *-4BP** **716S13- *-5BP**

* Length no. from Table, page M-1.

Stud Installation Instructions

Installation Dimensions

Panel up to 3 mm

Panel over 3 mm

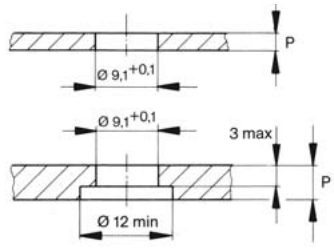

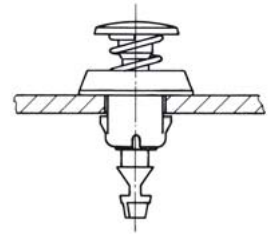

Style	Dimensions	Materials / Finish	Frame Thickness F	°C	Part No.
Spring Clip 	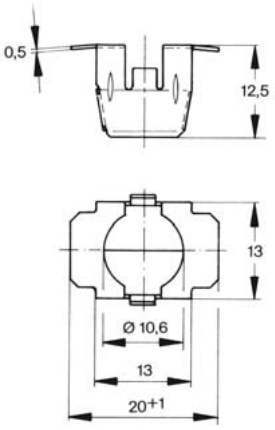	Stainless steel	1,0 - 1,5 1,5 - 2,0 2,0 - 2,5 2,5 - 3,0	-25 up to +90 (See stud assembly)	**720R01-1B** **720R01-2B** **720R01-3B** **720R01-4B**

Installation Instructions

Installation Dimensions

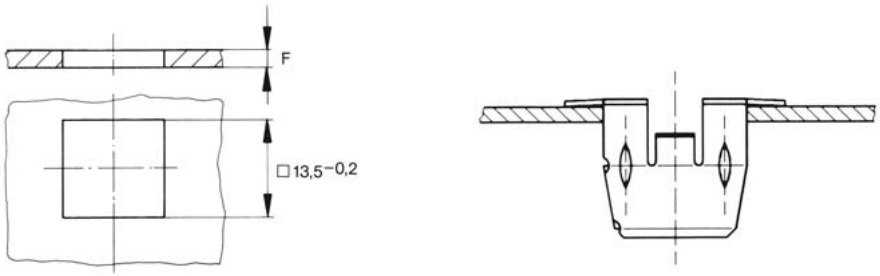

717F Series

Features

Max. tensile strength 3.000 N, working load 2.500 N.
Robust design - high strength.
Stud assembly with protective, compensating and retaining washers.
Rivet or screw mounting spring receptacle.
1/4 turn to open - close by a push of the finger.

Selection Instructions

1. Select stud assembly and spring clip, page N-2 and N-3.
2. Select compensating and retaining washers, page N-2.
3. Select stud length number from grip range G using the table below, insert into stud part number * (e.g. 717S01-*-1AGV).

Part no. example

Spring clip, rivet / screw mounting

717 S01 -2 -1AGV

- Material / Finish
- Head style
- Length No.
- Series

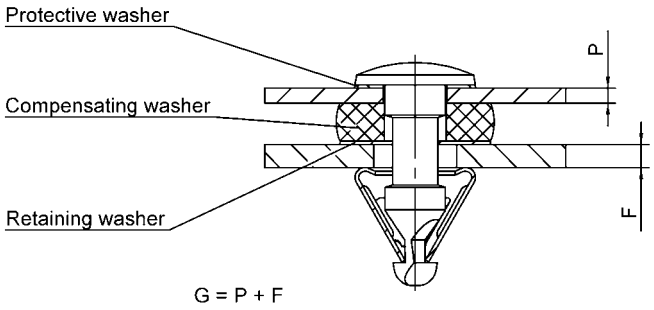

Stud Length Table

Griprange G	Stud Length No.
1,0 - 3,0	1
3,0 - 5,0	2
5,0 - 7,0	3
7,0 - 9,0	4
9,0 - 11,0	5
11,0 - 13,0	6

Other lengths on request.

Preferred dash-lengths

Style	Dimensions	Materials / Finish	°C	Part No.
Slotted Recess Head 	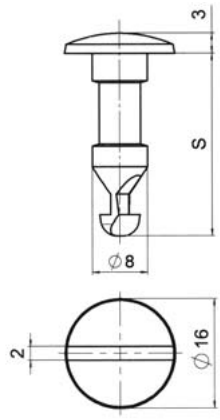 S = 20,5 + (2 x length no.)	Steel/ zinc-plated CrVI-free, clear passivation	-40 up to +100	**717S01- *-1AGV**
Knurled Head 	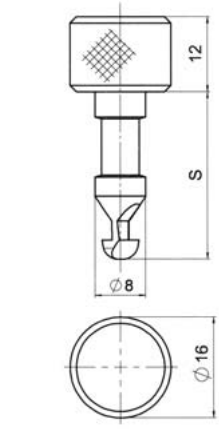 S = 20,5 + (2 x length no.)	Steel/ zinc-plated CrVI-free, clear passivation	-40 up to +100	**717S01- *-2AGV**

* Length no. from Table, see page N-1.

Stud Installation Instructions

Style	Dimensions	Materials / Finish	°C	Part No.
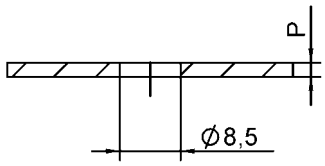 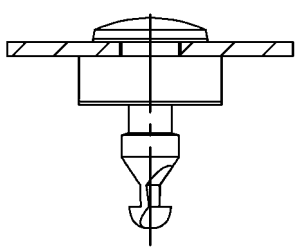	Protective washer 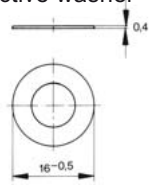	Plastic (PA6) / natural colour	-40 up to +100	**717W02-1K**
	Compensating washer 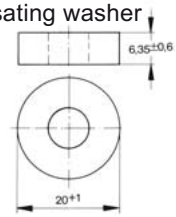	Plastic (PU-foam) / anthracite	-40 up to +100	**717W03-1K**
	Retaining washer 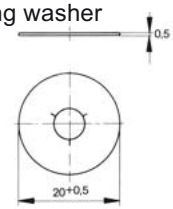	Plastic (PA6) / natural colour	-40 up to +100	**717W01-1K**

Style	Dimensions	Materials / Finish	°C	Part No.
Rivet / Screw Mounting 	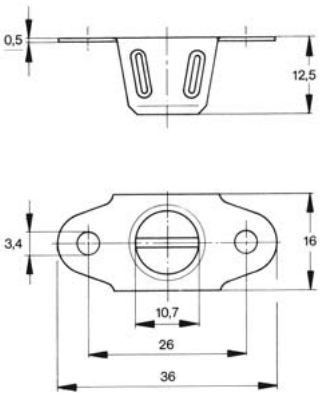	Steel / zinc flake coated	-40 up to 100	**717R01-1AK7**

Installation Instructions

Installation Dimensions
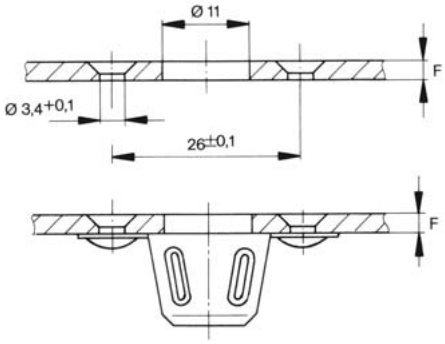

PT10 Series

Features

Max. tensile strength 1.200 N, working load 800 N.
1/4 turn to open, close with a push of the finger
Wide grip range
Tool or hand operated
Fast installation of snap-in spring receptacle.
No tools required for the installation of the stud and washer.
Tool operated stud has combination recess.

Selection Instructions

1. Select stud assembly according to panel thickness P, page O-2 and spring clip according to frame thickness F, page O-4.
2. Select Compensating washer and Retaining washer, page O-3.
3. Select stud length number from panel thickness P using the formula and table below (e.g. 720S01-*B).

Part no. example

Stud, slot-cross recess

720 S01 -1 B

- B — Material / Finish
- -1 — Length No.
- S01 — Style
- 720 — Series

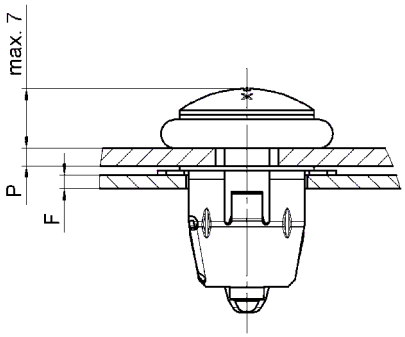

Panel Thickness P	Slot-Cross Recess Length No.	Wing Head Stud Length No.	Dimension L +0,1/-0,2	Dimension (S)
1,00 - 4,00	1	1	16	21
4,00 - 7,00	2	2	19	24
7,00 - 10,00	3	3	22	27

Preferred dash-lengths

Style	Dimensions	Materials / Finish	°C	Part No.
Slot-Cross Recess Head 	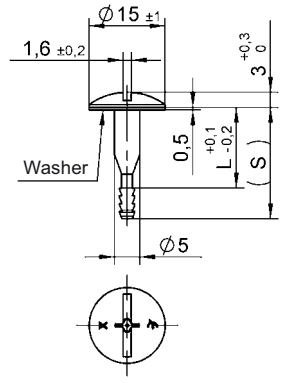 L + (S) see table page O-1	Stainless steel Washer: PA6 natural	-20 up to +70	**720S01-*B**
Wing Head 	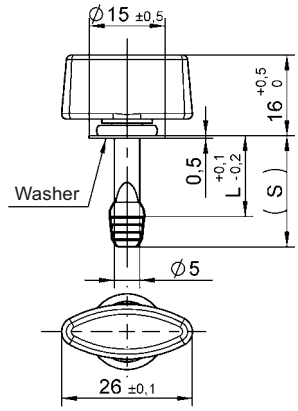 L + (S) see table page O-1	Stainless steel Knob: PA6 black Washer: PA6 natural	-20 up to +70	**720S02-*B**

* Length no. from Table, see page O-1.

Stud Installation Instructions

Installation Dimensions

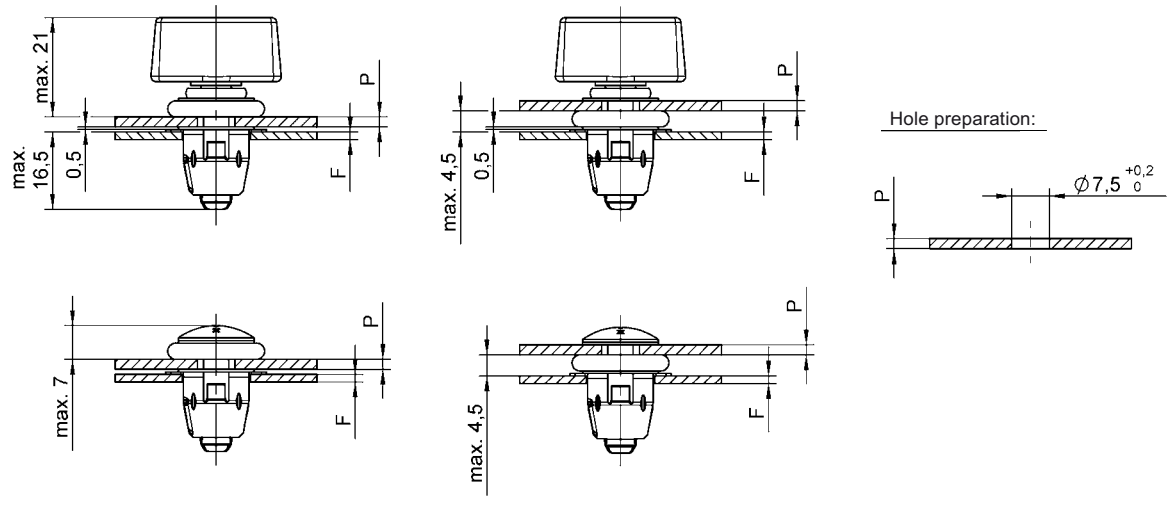

Style	Dimensions	Materials / Finish	°C	Part No.
Compensating Washer 	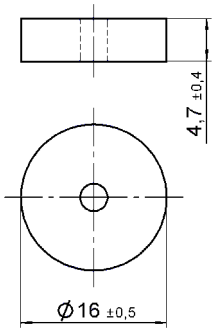	PU - Elastomer yellow	-20 up to +70	**720W01-2K**
Retaining Washer 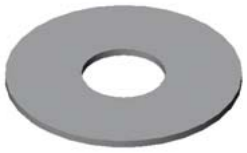	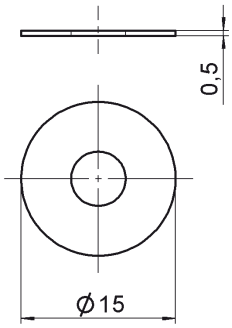	Polyamid natural	-20 up to +70	**50E15-1K**

Mounting Instructions

A

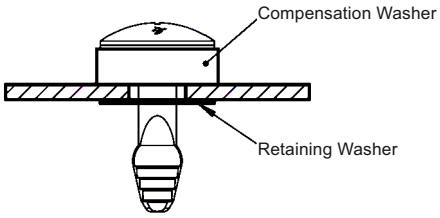

B

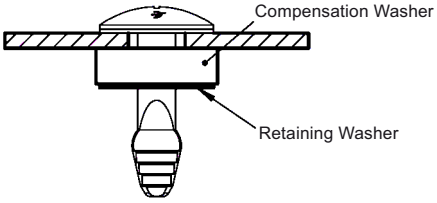

Style	Dimensions	Materials / Finish	Frame Thickness F	°C	Part No.
Spring Clip 	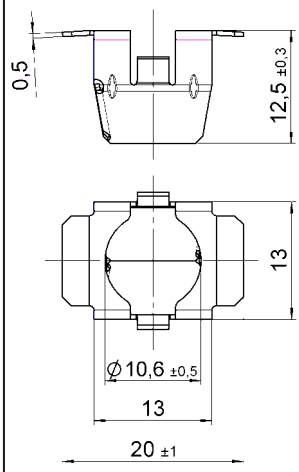	Stainless steel	1,0 - 1,5 1,5 - 2,0 2,0 - 2,5 2,5 - 3,0	-20 up to +70	**720R01-1B** **720R01-2B** **720R01-3B** **720R01-4B**

Installation Instructions

Installation Dimensions

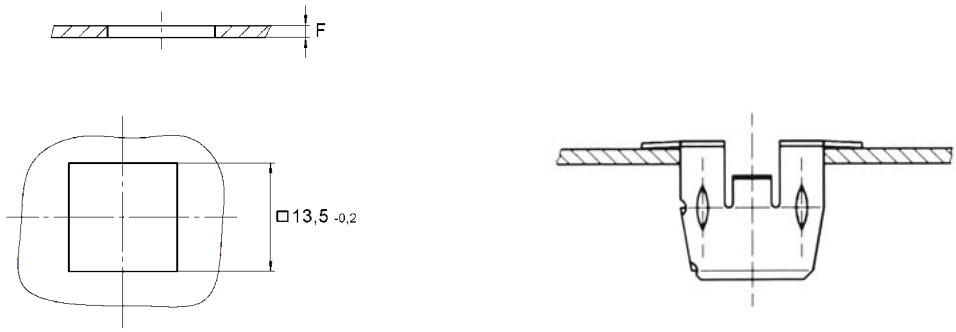

Camloc
Traditionally Innovative

Pawl Latches



V964L Series

Features
Wide grip range (total thickness G up to 15 mm).
Suitable for a large range of applications.
Easy installation with single-hole mounting.
Either tool-operated (slotted recess head) or hand-operated (fixed wing head).
Clockwise locking 3/4 turn maximum.

Part no. example
Pawl Latches, slotted recess head, with decorative washer.

V964L 01 -1 -2AG

- Variant
- Head style (slotted recess)
- Style
- Series

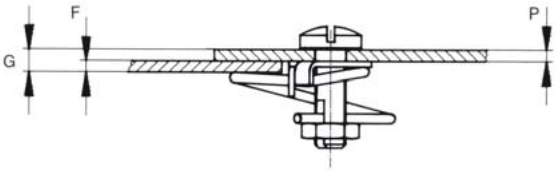

G = P + F

Style	Dimensions	Materials / Finish	°C	Part No.
Slotted Recess Head 	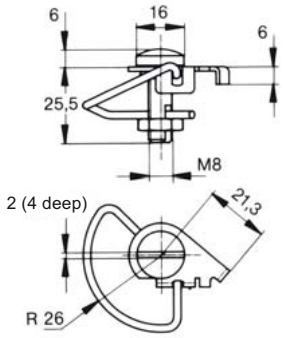	Stud: Steel / zinc-plated CrVI-free, clear passivation Spring: Stainless steel	120	**V964L01-1-1AG**
Slotted Recess Head with Decorative Washer 	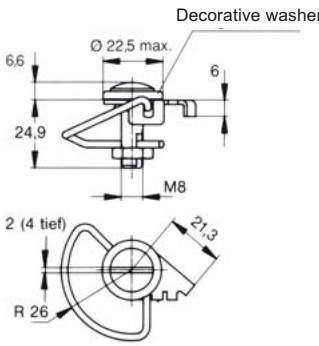	Stud: Steel / zinc-plated CrVI-free, clear passivation Spring: Stainless steel	120	**V964L01-1-2AG**
Fixed Wing Head 	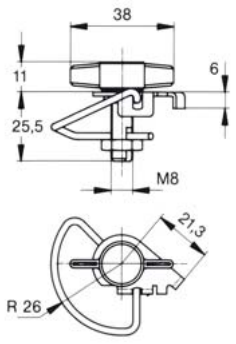	Stud: Steel / zinc-plated CrVI-free, clear passivation Spring: Stainless steel Wing: Plastic (POM) black	-40 up to +100	**V964L01-2-1AG**

Installation Dimensions

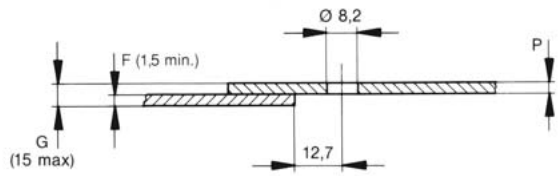

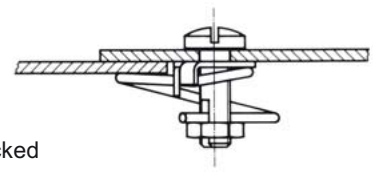

Locked

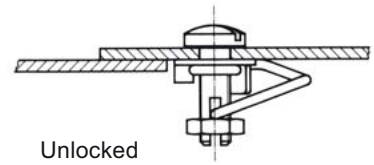

Unlocked

V965L Series

Features

Variable grip fastener. Available in two grip ranges from 1,0 mm to 18,8 mm.
Tool or hand operated head styles available.
Single hole mounting - low installation cost.
Clockwise locking as standard.
Counterclockwise locking fasteners upon request.

Part no. example

Pawl Latches, Flat head.
Grip range 1,0 mm - 12,2 mm.

V965L 23 -1 R1AG

- Locking Direction
- Grip Range (1,0 mm - 12,2 mm)
- Head Style
- Series

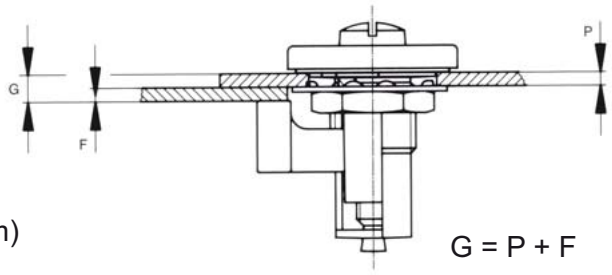

G = P + F

Style	Dimensions	Materials / Finish	°C	Part No.
Flat Head **Grip Range** **1,0 up to 12,2** 	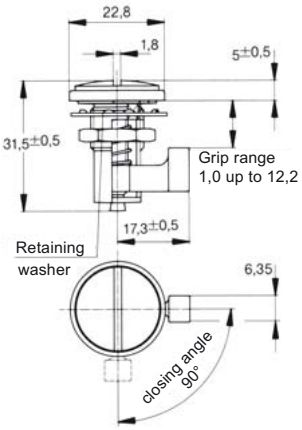	Steel / zinc-plated CrVI-free, clear passivation	-40 up to +100	**V965L23-1R1AG**
Flat Head **Grip Range** **7,6 up to 18,8** 	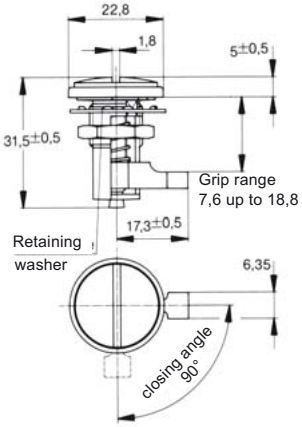	Steel / zinc-plated CrVI-free, clear passivation	-40 up to +100	**V965L23-2R1AG**

Style	Dimensions	Materials / Finish	°C	Part No.
Knurled Head **Grip Range** **1,0 up to 12,2** 	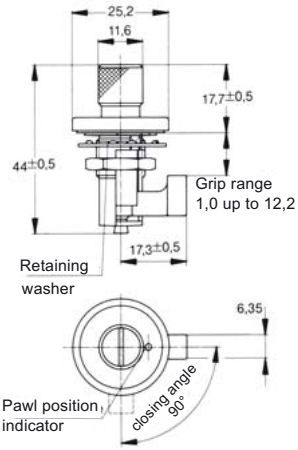	Steel / zinc-plated CrVI-free, clear passivation	-40 up to +100	**V965L1-1R1AG**
Knurled Head **Grip Range** **7,6 up to 18,8** 	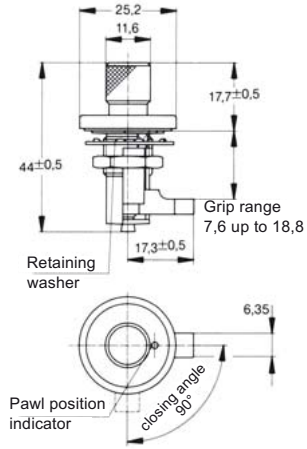	Steel / zinc-plated CrVI-free, clear passivation	-40 up to +100	**V965L1-2R1AG**

Pawl Latches Installation Instructions

Instruction Dimensions

Clockwise locking

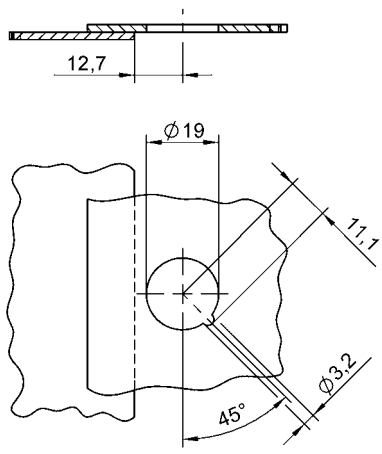

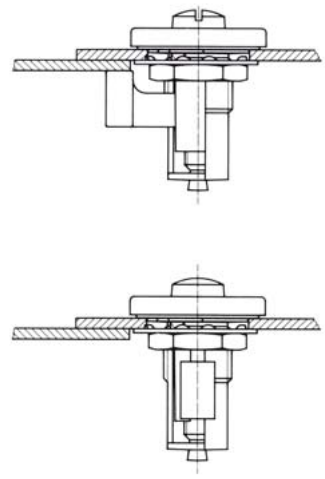

Camloc
Traditionally Innovative

Index

Part No.	Page
15/32-32NS-2B	C3,F11
15S1- *-1AD	K2
15S1- *-1AJ	K2
15S11-1CJ	K2
212-12S	F8
2600-*S	F3
2600-*SW	F3
2600-SW	C2,F6,F7
26R1-1	F9
26R16-1FGV	F8
26R18-1-1AA	F8
26S34-*	F3
26S38-*	F3
26S39-*	F3
26S42-*	F3
26S51-*	F3
2700-*S	F5
312-12S	F9
312-12WS	F9
4002-SW-SS	D5,E5,G6,
4P3-1	F7,G6
50E15-1K	O3
50E18-*AGV	D4
50E19-*AGV	E4
50E20-1AK7	D6
50E20-2AK7	D6
50E21-*AGV	D2
50E21-*S	D2
50E21-*W0AGV	D3
50E21-*WAGV	D3
50E21-*WS	D3
50E2-3BP	D5,E5
50E60-*AGV	D3
50E61-*AGV	E3
50E7-*AGV	E4
50E70-*AGV	D2
50E71-*AGV	E2
50E8-*AGV	E2
50E8-*S	E2
50E8-*W0AGV	E3
50E8-*WAGV	E3
50E8-*WS	E3
50E80-*AGV	D4
50E80-*CP	D4
50E81-*AGV	E4
50E81-*CP	E4
50E82-*AGV	D4
50E82-*CP	D4
50E83-*AGV	E4
50E83-*CP	E4
50E90-*AGV	D2
50E91-*AGV	E2
50S12-0-1AA	D5
50S12-1-1AA	D5
50S12-2-1AA	D5
50S12-3-1AA	D5
50S12-4-1AA	D5
50W204-01K	D5,E5, G6
5R2-3	B4
5S15-*	B2
5S3-2	B3
5S72-5-1AA	B3
5S72-9-1AA	B3
713S*- *AE	J2
715R02-1BP	L3
715R02-2BP	L3
715R02-3BP	L3
715R02-4BP	L3
715S12- *-1BP	L2
715S12- *-2BP	L2
715S12- *-3BP	L2
715S13- *-1BP	L2
715S13- *-2BP	L2
715S13- *-3BP	L2
716S12- *-1BP	M2
716S12- *-2BP	M2
716S12- *-3BP	M2
716S12- *-4BP	M2
716S12- *-5BP	M2
716S13- *-1BP	M2
716S13- *-2BP	M2
716S13- *-3BP	M2
716S13- *-4BP	M2
716S13- *-5BP	M2
717R01-1AK7	N3
717S01- *-1AGV	N2
717S01- *-2AGV	N2
717W01-1K	N2
717W02-1K	N2
717W03-1K	N2
720R01-1B	M3,O4
720R01-2B	M3,O4
720R01-3B	M3,O4
720R01-4B	M3,O4
720S01-*B	O2
720S02-*B	O2
720W01-2K	O3
991R2-1AGV	H5
991R2-1BP	H5
991RZ-2AR	H5
991R2-2AZ	H5
991R2-3AGV	H5
991R2-3BP	H5
991R6-1AK7	H5
991S01- *-1AGV	H2
991S01- *-1BP	H2
991S02- *-1AGV	H2
991S03- *-1AGV	H2
991S05- *-1AGV	H2
991S17-1K	H4
991S2991-*AGV	H3
991S30-*AGV	H3
991W02-1BP	H4
991W03-1BP	H4
991W04-1BP	H4
99E10-01	C3,F10
99N10-01A1	C3,F11
99R10-01A1	C3,F10
991R2-2AR	H5
99W10-01A1	C2
AN6227-B3	F6
AN6227-B6	F6
D214-16FGV	G8

Index

Part No.	Page
D214-16NFGV	G8
D244-16-FGV	G9
D244-16C-FGV	G9
D4002-*AGV	G4
D4002-*WAGV	G4
D4002-N-AGV	G7
D4002-O-AGV	G7
D4002-P-AGV	G7
D4002-G-AGV	G7
D4002-H-AGV	G7
D4002I-*AGV	G5
D40E28-*AGV	G5
D40G11-3K	G5
D40R12-1FGV	G8
D40S39-1K	G5
D40S47-*AGV	G4
D40S5-*AGV	G4
D40S5I-*AGV	G5
R4G-3	G7
T107-1	K2
T26	G6
T98-1	C2,F7
V15R13-1-1AB	K3
V15R14-1-1AB	K3
V212-12-1FGV	F8
V212-12-2FGV	F8
V212-12N-1FGV	F8
V2600-LW-7	C2,F6,F7
V26R6-1AGV	F8
V26S01-*AGV	F3
V26S02-*AGV	F3
V26S04-*AGV	F3
V26S06-* -1AGV	F4
V26S07-* -1AGV	F4
V26S08-* -1AGV	F4
V27S01-*AGV	F5
V27S02-*AGV	F5
V27W01-1AN	F7
V312-12AGV	F9
V50R1-1-1AGV	E6,G9
V50R1-1-1BP	E6

Part No.	Page
V50R1-1-2AR	E6,G9
V50R1-1-2AZ	E6,G9
V50R4-2-1AK7	D6
V5R2-1AK7	B4
V5S21-*AGV	B2
V5W3-1AGV	B3
V5S5-*AGV	B2
5S27-*	B2
V936S05-3-1AA	I1
V936S05-4-1AA	I1
V936S11-3-1AA	I1
V936S11-4-1AA	I1
V964L01-1-1AG	P1
V964L01-1-2AG	P1
V964L01-2-1AG	P1
V965L1-1R1AG	Q2
V965L1-2R1AG	Q2
V965L23-1R1AG	Q1
V965L23-2R1AG	Q1
V99S10-*AG	C2

Locking devices
and mechanic catches


Art.:6907


Art.:6321


Art.:6313


Art.:6324


Art.:6350


Art.:6355


Art.:6352


Art.:6800


Art.:6306


Art.:6314


Art.:6315


Art.:6235


Art.:6318


Art.:6325


Art.:6300


Art.:6305


Art.:6323


Art.:6308


Art.:6322


Art.:6310


Art.:6311


Art.:6312


Art.:6328

Locking devices and mechanic catches

Art. no.: 6314 (perforated and countersunk)

Latch with return spring

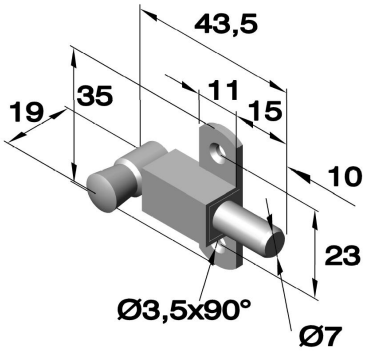

Article no.		
Series	Execution	Material
		Zinc plated
		Steel
6314	.01	.04

Art. no.: 6315 (perforated and countersunk)

Latch with return spring

Suitable strike plate:
Art. no.: 6318.__

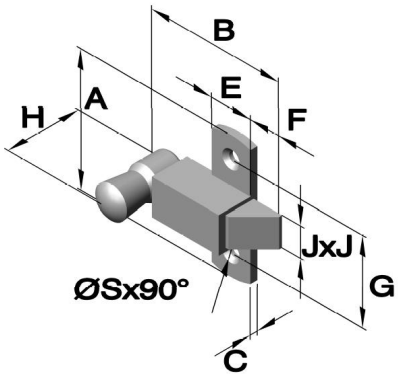

Article no.				Dimensions in mm								
Series	Execution	Material		A	B	C	E	F	G	H	J	S
		Zinc plated	Chrome plated									
		Steel	Brass									
6315	.01	.04	.23	35	36,5	2,2	11	8	23	19	8	3,5
6315	.02	.04	.23	50	56	2,7	16	12	34	27	12	5,5
6315	.03	.04	.23	70	73	3,5	22	17	45	38	16	7

Art. no.: 6316 (perforated and countersunk)

Latch with return spring

Suitable Strike plate:
Art. no.: 6318.__

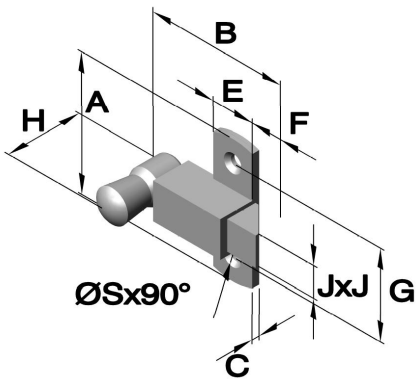

Article no.				Dimensions in mm								
Series	Execution	Material		A	B	C	E	F	G	H	J	S
		Zinc plated	Chrome plated									
		Steel	Brass									
6316	.01	.04	.23	35	36,5	2,2	11	8	23	19	8	3,5
6316	.02	.04	.23	50	56	2,7	16	12	34	27	12	5,5
6316	.03	.04	.23	70	73	3,5	22	17	45	38	16	7

TÜVRheinland ZERTIFIZIERT Management System ISO 9001:2015 ISO 14001:2015 www.tuv.com ID 9108624624

Further materials and surface finishes on demand. We will be pleased to give you advice.
Phone: +49 (0) 231 / 725 790 -0 eMail: info@hokon-verschlusstechnik.de
Fax: +49 (0) 231 / 725 790 -10 Homepage: www.hokon-verschlusstechnik.de

Locking devices and mechanic catches

Art. no.: 6318 (perforated and countersunk)

Strike plate suitable for:
Art. no.: 6315.__
Art. no.: 6316.__

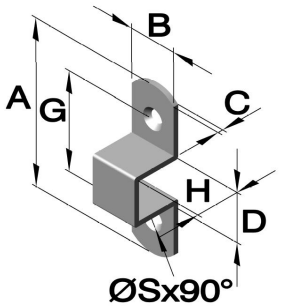

Article no.				Dimensions in mm						
Series	Execution	Material		A	B	C	D	G	H	S
		Zinc plated	Chrome plated							
		Steel	Brass							
6318	.01	.04	.23	35	11	1,2	11,5	23	11,5	4,3
6318	.02	.04	.23	50	16	1,5	16	34	16	5,2
6318	.03	.04	.23	70	19	2	19	43,5	19	6,2

art.no. 100.2485

Countersunk folding handle with return spring, to screw

Clamping area: 7mm

Installation opening: 37x 48

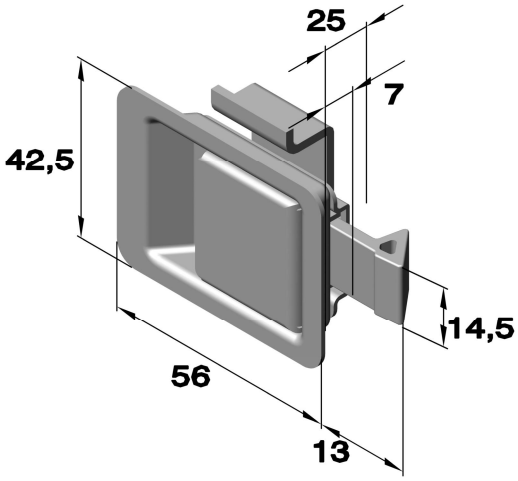

Article no.		
Series	Material	
	Chrome plated	Brushed
	Steel	Stainless steel
100.2485	.03	.30

Art. no.: 6907

Countersunk folding handle with return spring, to screw

Installation opening: 72 x 56

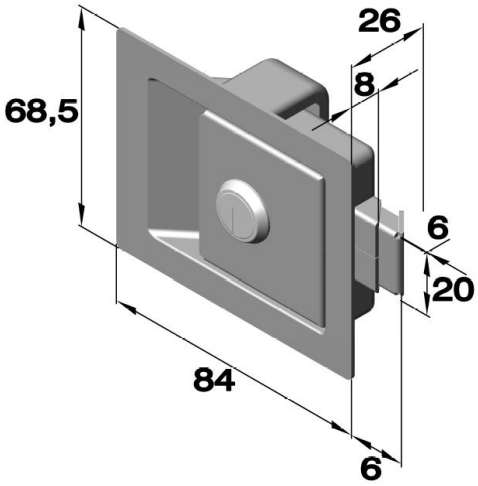

Article no.					
Series	Execution	Material			
		Chrome plated	Zinc plated	Raw	
		Steel	Steel	Stainless steel	
6907	.02	-	.04	-	without lock
6907	.03	-	.04	-	with lock
6907	.04	-	-	.30	without lock
6907	.05	-	-	.30	with lock

Locking devices and mechanic catches

Art.no. 100.L1037 (perforated)

Countersunk folding handle with return spring, to screw

Clamping area: 11-12mm

Installation opening: 48 x 64

Article no.	
Series	Material
	Zinc plated
	Steel
100.L1037	.04

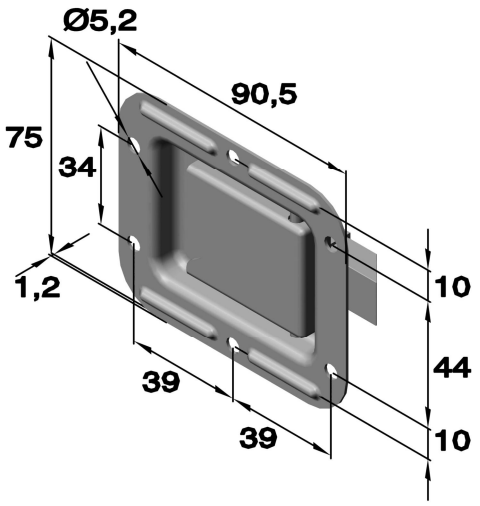

Art.no. 100.L1066 (perforated)

Countersunk folding handle with return spring, to screw

Clamping area: 11-12mm

Installation opening: 76 x 86

Article no.	
Series	Material
	Zinc plated
	Steel
100.L1066	.04

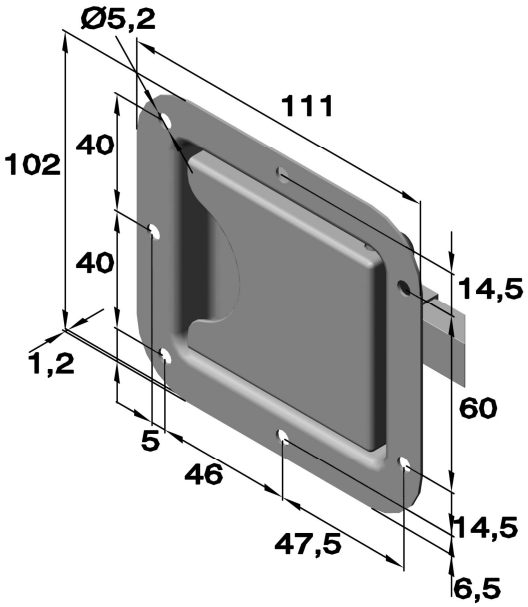

Art.no. 100.L1068 (perforated)

Countersunk folding handle with return spring, to screw with lock

Clamping area: 11-12mm

Installation opening: 76 x 86

Article no.	
Series	Material
	Zinc plated
	Steel
100.L1068	.04

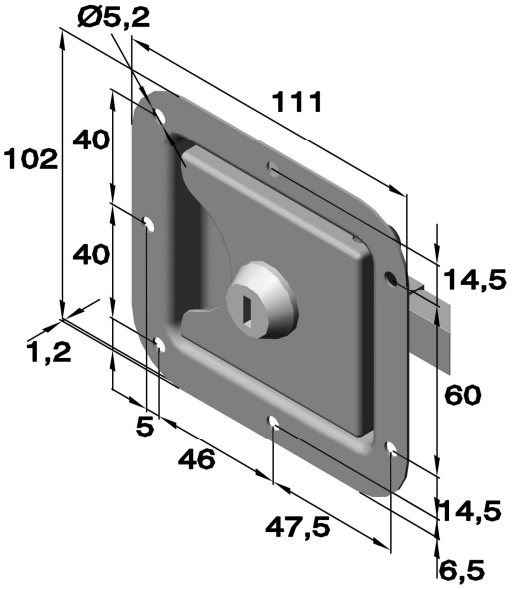

Locking devices and mechanic catches

Art. no.: 3226 (perforated)

Latch with return spring

Article no.	
Series	Material
	Zinc plated
	Steel
3226	.04

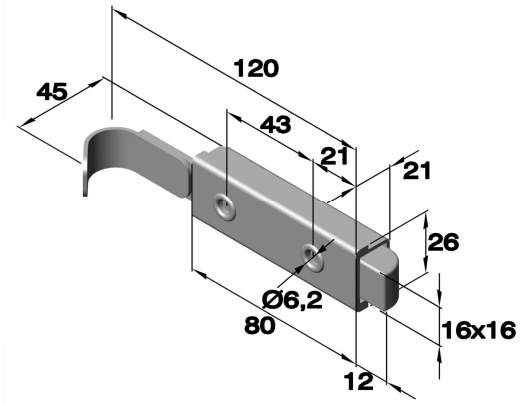

Art. no.: 6321.01 (perforated, rounded up)

Latch with return spring

Article no.		
Series	Material	
	Zinc plated	Raw
	Steel	Stainless steel
6321.01	.04	.30

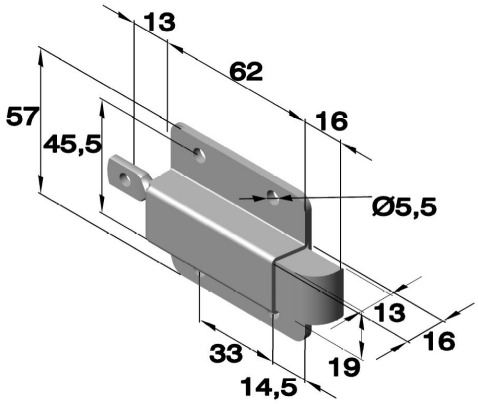

Art. no.: 6321.02 (perforated, rounded down)

Latch with return spring

Article no.		
Series	Material	
	Zinc plated	Raw
	Steel	Stainless steel
6321.02	.04	.30

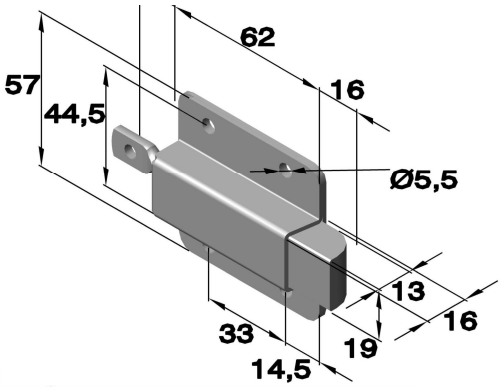

Art. no.: 6325 (perforated)

Latch with return spring

Article no.	
Series	Material
	Zinc plated
	Steel
6325	.04

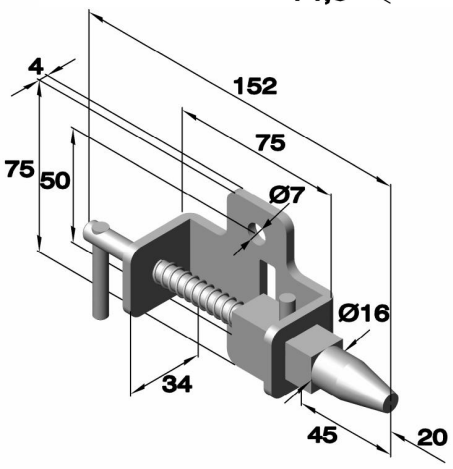

Locking devices and mechanic catches

Art. no.: 6306 (perforated)
Door latches

Article no.		
Series	Execution	Material
		Zinc plated
		Steel
6306	.01	.08

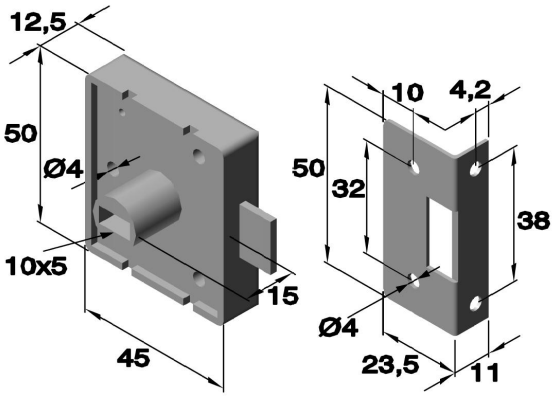

Art. no.: 6330.01 (drilled)
Lock bolt with return spring

Article no.	
Series	Material
	Zinc plated
	Steel
6330.01	.04

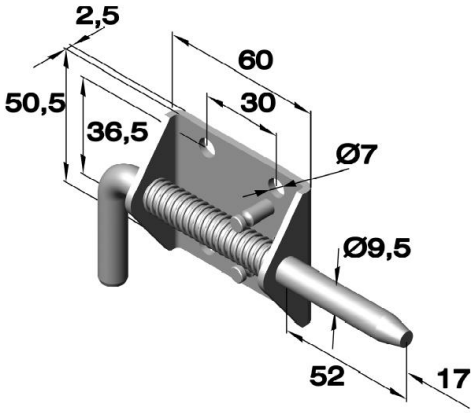

Art. no.: 6235 (perforated)
Lock bolt with return spring

Article no.	
Series	Material
	Raw
	Stainless steel
6235	.30

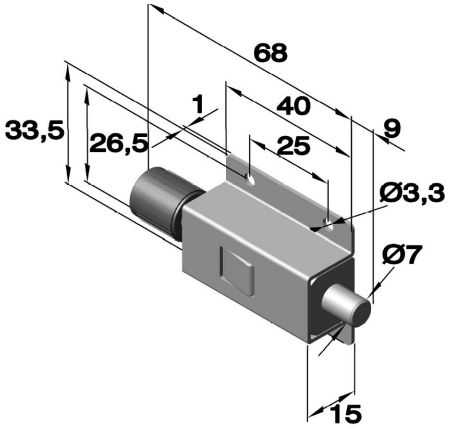

Art. no.: 6300 (perforated)
Latch

Suitable key:
Art. no.: 6310.01.08

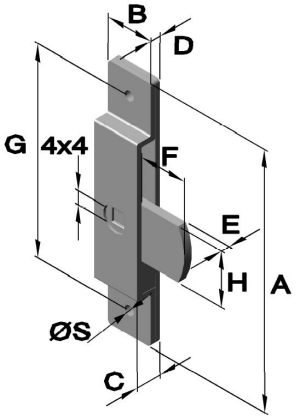

Article no.			Dimensions in mm								
Series	Execution	Material / Zinc plated / Steel	A	B	C	D	E	F	G	H	S
6300	.01	.08	75	14	7	3	2,5	14	61	14	3,6
6300	.02	.08	85	16	8	3	3	15	66	16	3,6

TÜVRheinland ZERTIFIZIERT Management System ISO 9001:2015 ISO 14001:2015 www.tuv.com ID 9108624624

Further materials and surface finishes on demand. We will be pleased to give you advice.
Phone: +49 (0) 231 / 725 790 -0 eMail: info@hokon-verschlusstechnik.de
Fax: +49 (0) 231 / 725 790 -10 Homepage: www.hokon-verschlusstechnik.de

Locking devices and mechanic catches

Art. no.: 6301 (perforated)

Latch

Suitable key:
Art. no.: 6311.01.__
Art. no.: 6328

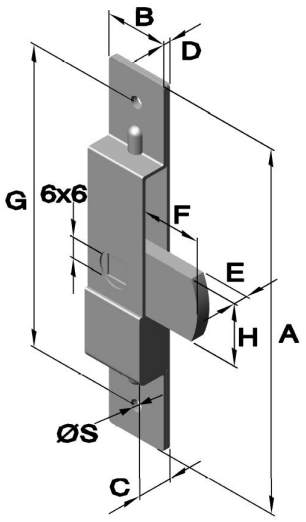

Article no.			Dimensions in mm								
Series	Execution	Material Zinc plated Steel	A	B	C	D	E	F	G	H	S
6301	.01	.08	105	18	10,5	2	4	17	87	18	3,8
6301	.02	.08	105	20	10,5	2	4	17	86	18	3,8
6301	.03	.08	115	22	11	2	6	16	97	22	5,1

Art. no.: 6305 (perforated)

Latch

This article works left and right

Suitable key:
Art. no.: 6312.01.__

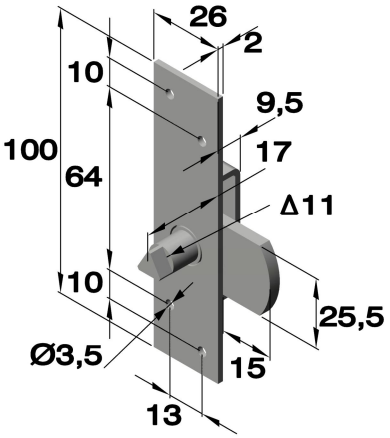

Article no.		
Series	Execution	Material Steel Zinc plated
6305	.01	.04

Art. no.: 6308 (perforated)

Latch
This article works left and right

Suitable key:
Art. no.: 6311.01.__
Art. no.: 6328

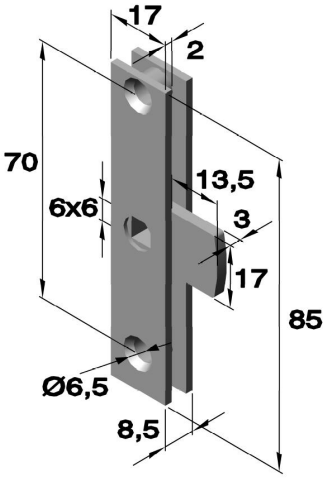

Article no.		
Series	Execution	Material Raw Stainless steel
6308	.02	.30

Locking devices and mechanic catches

Art. no.: 6322 (perforated)

Latch with return spring
This article works left and right

Suitable key:
Art. no.: 6311
Art. no.: 6328

Article no.		
Series	Execution	Material
		Raw
		Stainless steel
6322	.01	.30
6322	.02	.30

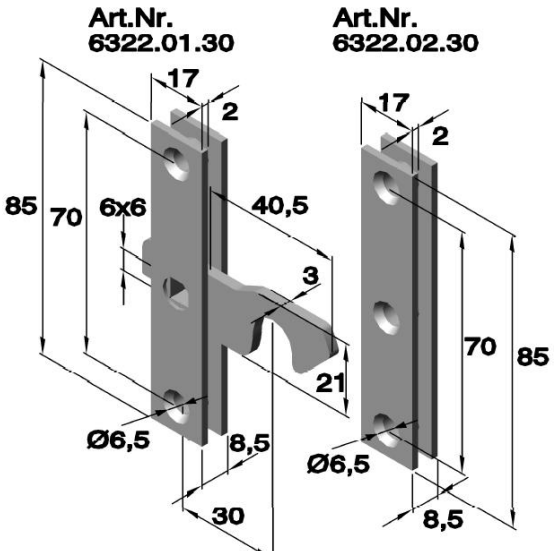

Art. no.: 6323 (perforated)

Latch
This article works left and right

Suitable key:
Art. no.: 6328

Article no.	
Series	Material
	POM (Polyoxymethylene)
6323	.30

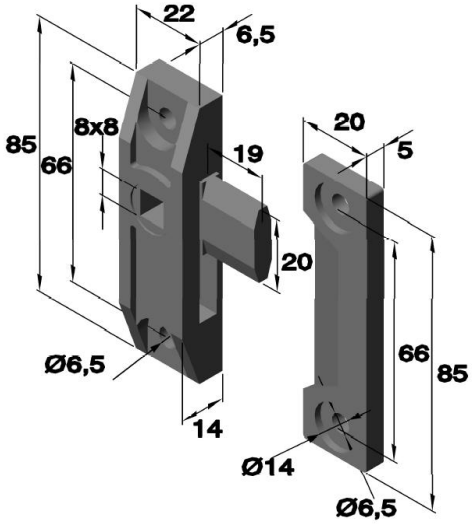

Art. no.: 6327 (perforated)

Latch
This article works left and right

Suitable key:
Art. no.: 6328

Article no.			
Series	Execution	Material	
		Zinc plated	Raw
		Steel	Stainless steel
6327	.01	.04	-
6327	.02	-	.30

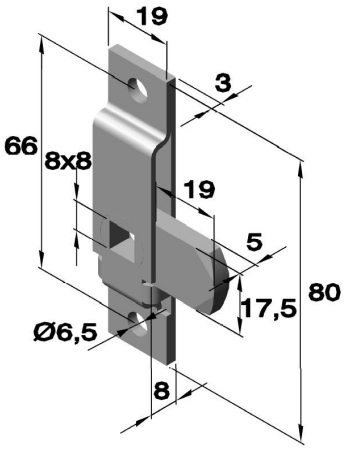

Management System ISO 9001:2015 ISO 14001:2015 TÜVRheinland ZERTIFIZIERT www.tuv.com ID 9108624624

Further materials and surface finishes on demand. We will be pleased to give you advice.
Phone: +49 (0) 231 / 725 790 -0 eMail: info@hokon-verschlusstechnik.de
Fax: +49 (0) 231 / 725 790 -10 Homepage: www.hokon-verschlusstechnik.de

Locking devices and mechanic catches

Art. no.: 6310

Suitable for:
Art. no.: 6300.01.__
Art. no.: 6300.02.__

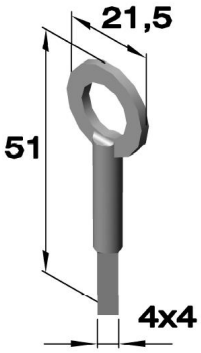

Article no.		
Series	Execution	Material
		Zinc plated
		Steel
6310	.01	.08

Art. no.: 6311

Suitable for:
Art. no.: 6301.__
Art. no.: 6308.__
Art. no.: 6322.__

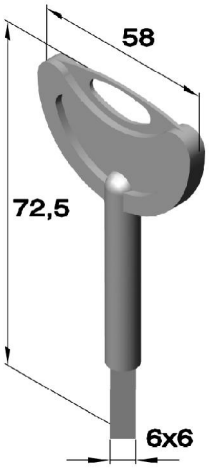

Article no.		
Series	Execution	Material
		Zinc plated
		Zamak
6311	.01	.04

Art. no.: 6312

Suitable for:
Art. no.: 6305.__

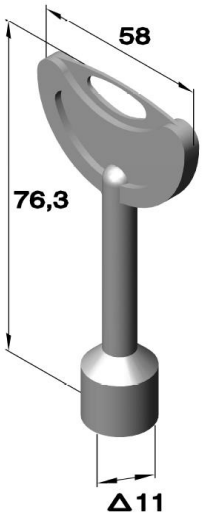

Article no.		
Series	Execution	Material
		Zinc plated
		Zamak
6312	.01	.04

Locking devices and mechanic catches

Art. no.: 6328

Suitable for:
Art. no.: 6301.__
Art. no.: 6308.__
Art. no.: 6322.__
Art. no.: 6323.__
Art. no.: 6327.__

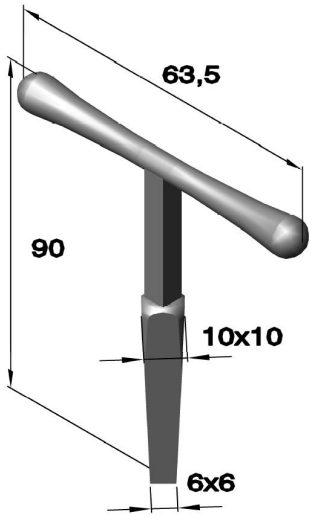

Article no.	
Series	Material
6328	Cast steel

Art. no.: 6319 (perforated)

Latch with return spring
Spring made of stainless steel

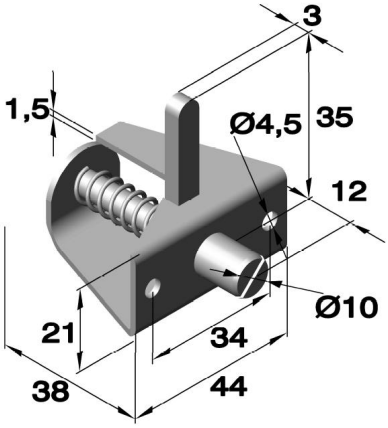

Article no.	
Series	Material
	Zinc plated
	Steel
6319	.04

Art. no.: 6313 (perforated and countersunk)

Shoot bolt with locking plate

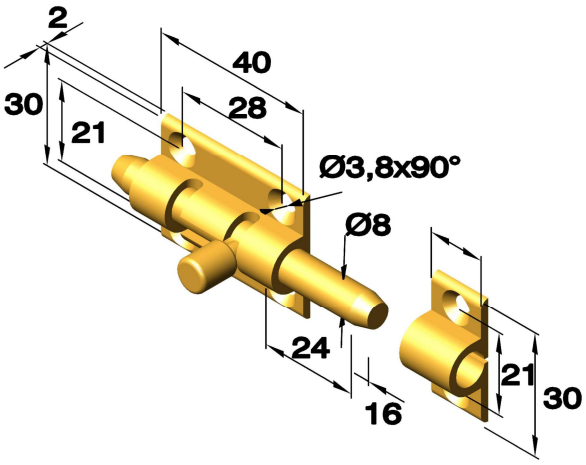

Article no.		
Series	Material	
	Brass	Brass
	Polished	Chrome plated
6313	.22	.23

Management System ISO 9001:2015 ISO 14001:2015 TÜVRheinland ZERTIFIZIERT www.tuv.com ID 9108624624

Further materials and surface finishes on demand. We will be pleased to give you advice.
Phone: +49 (0) 231 / 725 790 -0 eMail: info@hokon-verschlusstechnik.de
Fax: +49 (0) 231 / 725 790 -10 Homepage: www.hokon-verschlusstechnik.de

Locking devices and mechanic catches

Art. no.: 6324 (perforated and countersunk)

Shoot bolt with locking plate

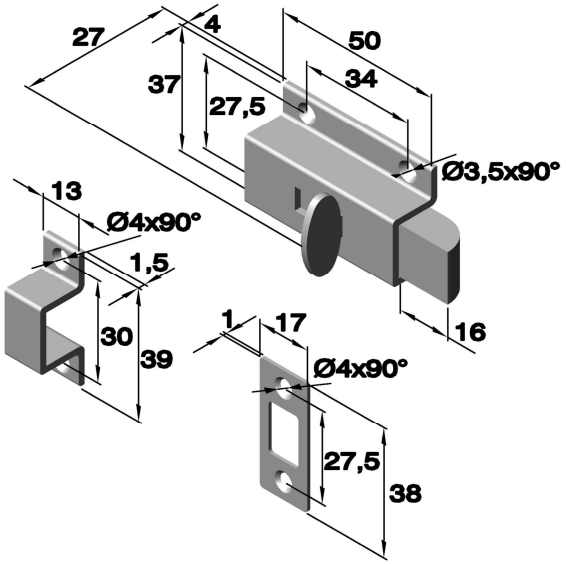

Article no.	
Series	Material
	Satin finished
	Stainless steel
6324	.30

Art. no.: 6350 (perforated and countersunk)

Double ball catches, mechanical
to screw

The locking plate can be inserted in
4 different directions inside
the interlock plate

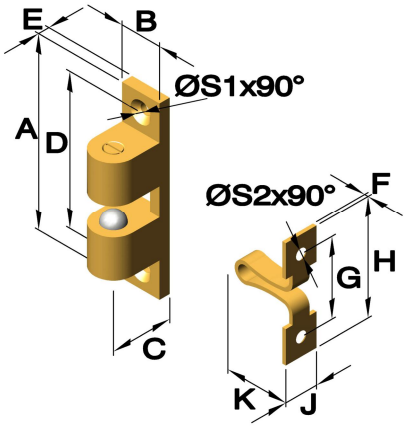

Article no.			Dimensions in mm											
Series	Execution	Material Brassed Zamak	A	B	C	D	E	F	G	H	J	K	S1	S2
6350	.01	.52	50	11	12,5	40	3	1,4	21	30	8	18	4,2	3,5
6350	.02	.52	60	14,5	14,5	48	3	2	26	42	10	20	4,2	4,2
6350	.03	.52	70	17,5	16,5	57	3,5	2	32	50	12	22	4,2	3,2

Art. no.: 6352 (perforated and countersunk)

Double ball catcher, mechanical
to screw

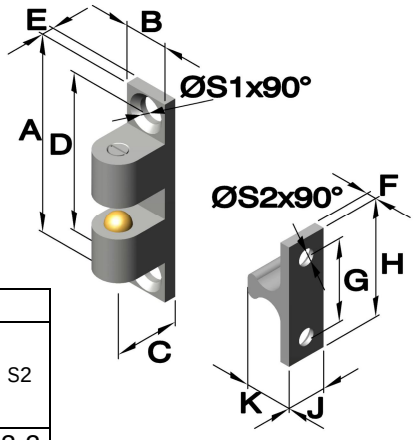

Article no.			Dimensions in mm											
Series	Execution	Material Chrome plated Zamak	A	B	C	D	E	F	G	H	J	K	S1	S2
6352	.01	.53	42,5	8	10	35	2,5	2,5	16	25	7,5	11	3,2	3,2
6352	.03	.53	50	10	12,5	40	3	2,5	20	30	9	12	4,2	4,2
6352	.05	.53	70	13,5	17	60	4	3	30	42	10,5	17	4,2	4,2

Locking devices and mechanic catches

Art. no.: 6355 (perforated and countersunk)

Double ball catcher, mechanical
to screw

The locking plate can be inserted in
2 different directions inside
the interlock plate

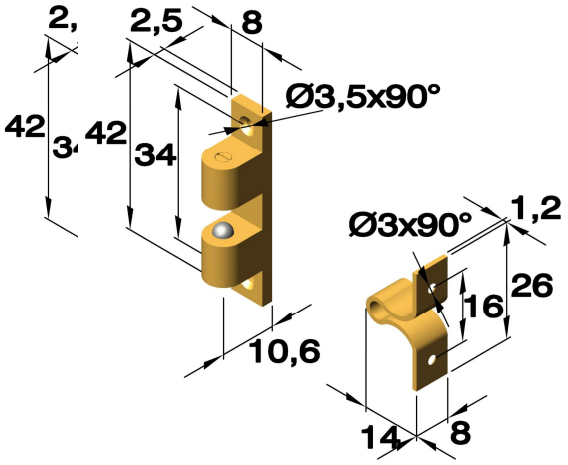

Article no.		
Series	Execution	Material Brassed Zamak
6350	.01	.52

Art. no.: 6800

Ball catcher

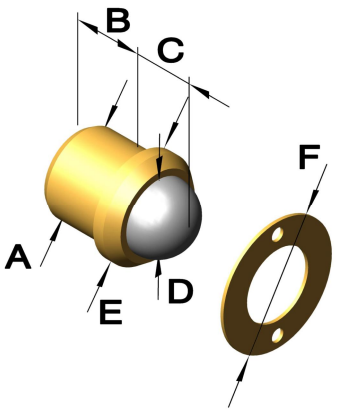

Article no.			Dimensions in mm					
Series	Execution	Material Raw Brass	A	B	C	D	E	F
6800	.01	.20	8	7,5	4,5	6,5	9	16
6800	.02	.20	10	8,5	6,5	8	11	16
6800	.03	.20	12	9	7	10	13	19,5
6800	.04	.20	13	10,5	7,2	10	14	19,5

Art.no. 6356

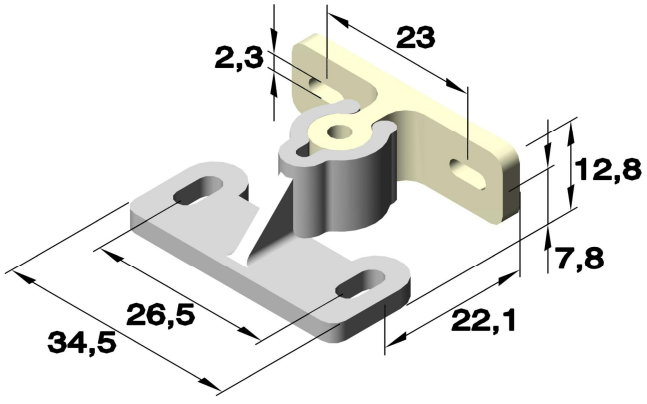

Article no.		
Series	Execution	Material Raw Plastic
6356	.01	.86

Management System ISO 9001:2015 ISO 14001:2015 TÜVRheinland ZERTIFIZIERT www.tuv.com ID 9108624624

Further materials and surface finishes on demand. We will be pleased to give you advice.
Phone: +49 (0) 231 / 725 790 -0 eMail: info@hokon-verschlusstechnik.de
Fax: +49 (0) 231 / 725 790 -10 Homepage: www.hokon-verschlusstechnik.de

Locking devices and mechanic catches

Art.no. 6354

Installation opening

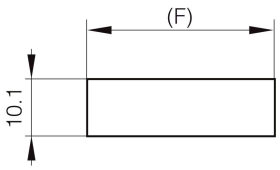

E	0.8	1.0	1.2
(F)	32.3	32.9	33.8

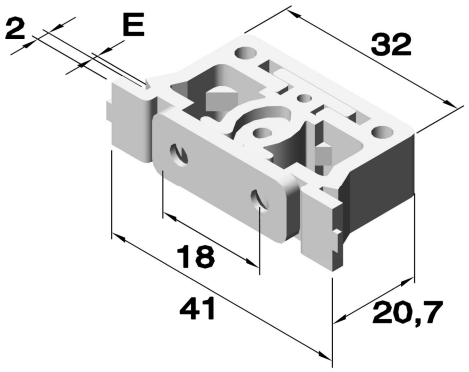

Article no.		
Series	Execution	Material
		Raw
		Plastic
6354	.01	.86



Art.no. L80

Compression latch
With or without lock cylinder available
Adjustable clamping area from 24-46mm
Suitable for panel thickness from max. 2mm
Supplied with a mounting plate

Article no.							Dimensions in mm
Series	Execution	Material		Same key	Different key	Without lock cylinder	A
		Black coated	Chrome plated				
		Zamak	Zamak				
L80	B	-EH	-ED	A	D	N	0-24
L80	A	-EH	-ED	A	D	N	24-46

Dimensions and hole preparations:

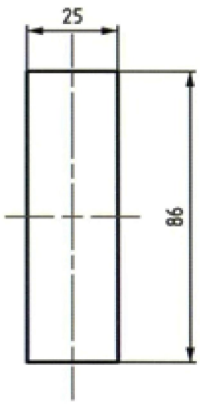

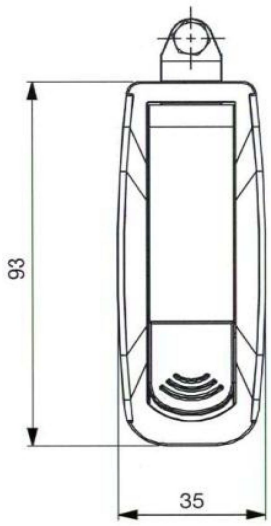

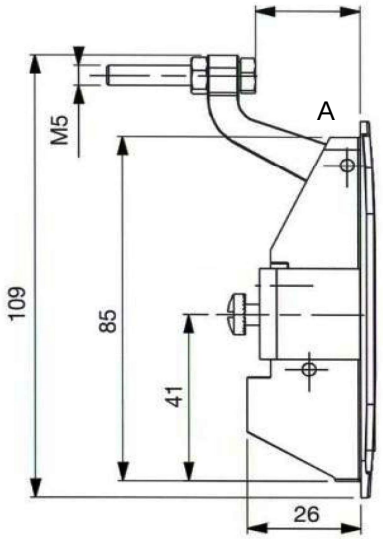

Locking devices and mechanic catches

Art.no. 6335



Compression latch
With or without lock cylinder available
Adjustable clamping area from 1-35mm
Supplied with a mounting plate
and screws in zinc plated steel.

Article no.				Dimensions in mm		
Series	Execution	Material Black coating Zamak		A	B	C
6335	.11	.59	with lock	106	42	1-35
6335	.12	.59	without lock	106	42	1-35

Dimensions and hole preparations:

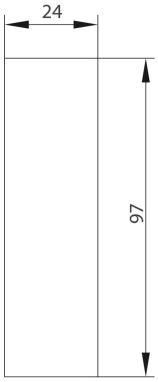

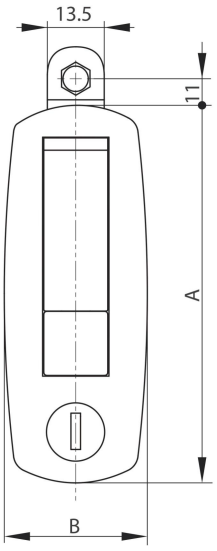

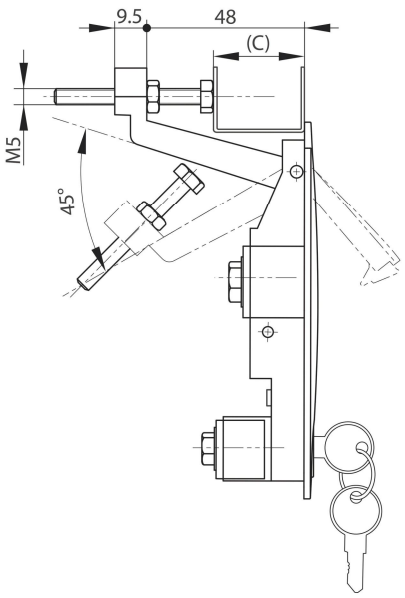

Locking devices and mechanic catches

Hasps

Art. no.: 3045 (perforated)

Hasp with lock bracket

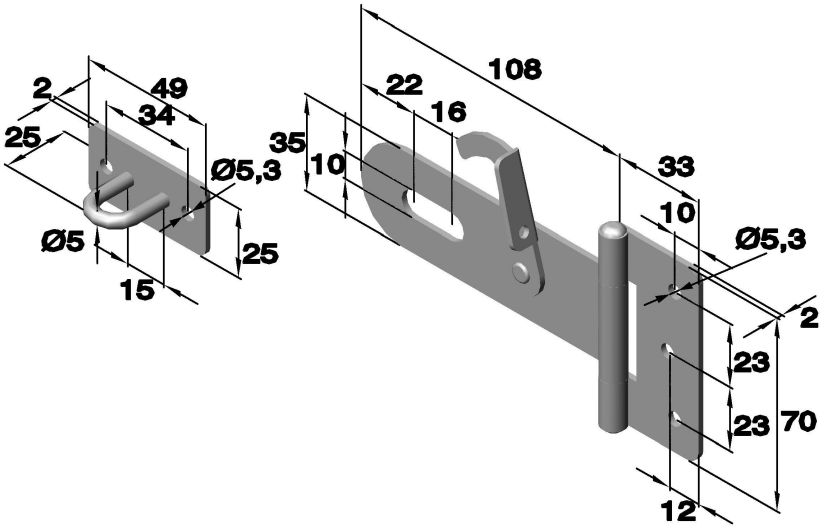

Article no.	
Series	Material
	Zinc plated
	Steel
3045	.04

Art. no.: 6028.01 (perforated and countersunk)

Hasp

Suitable lock bracket:
Art. no.: 6029.01.23

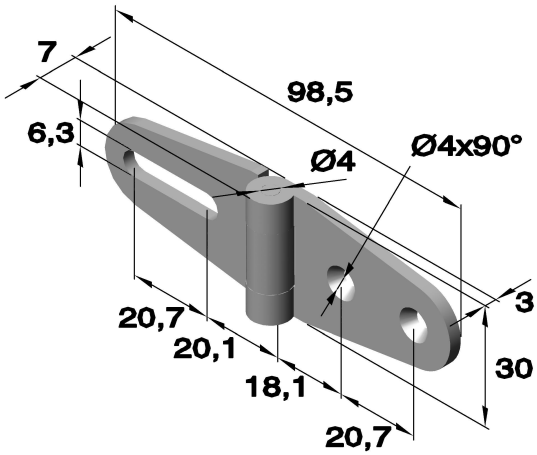

Article no.	
Series	material
	Chrome plated
	Brass
6028.01	.23

Art. no.: 6029.01 (perforated and countersunk)

Lock bracket

Suitable hasp:
Art. no.: 6028.01.23

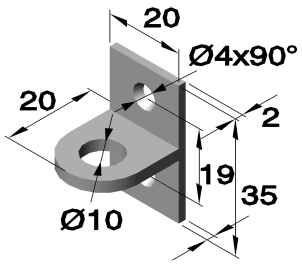

Article no.	
Series	Material
	Chrome plated
	Brass
6029.01	.23

TÜVRheinland ZERTIFIZIERT
Management System
ISO 9001:2015
ISO 14001:2015
www.tuv.com ID 9108624624

Further materials and surface finishes on demand. We will be pleased to give you advice.
Phone: +49 (0) 231 / 725 790 -0 eMail: info@hokon-verschlusstechnik.de
Fax: +49 (0) 231 / 725 790 -10 Homepage: www.hokon-verschlusstechnik.de

Magnetic catches


Art.:6470.25


Art.:6470.04


Art.:6470.30


Art.:6470.06


Art.:6470.07


Art.:6470.09


Art.:6470.15


Art.:6470.08


Art.:6470.28


Art.:6470.17


Art.:6470.12


Art.:6470.13


Art.:6470.14


Art.:6470.01


Art.:6470.16


Art.:6470.32


Art.:6470.11


Art.:6470.11.08


Art.:6470.16


Art.:6470.18


Art.:6470.19


Art.:6470.21


Art.:6470.29

Magnetic catches

Ordering example:

Art.no 6072 01/02. 04/30

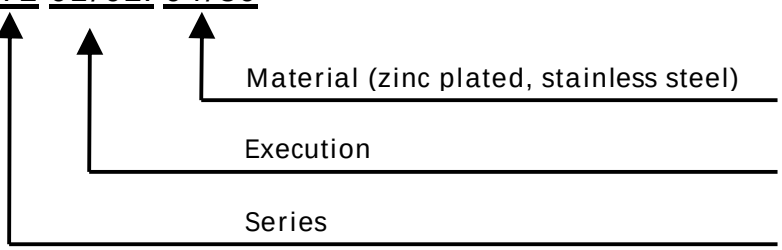

Art. no.: 6470.01

Magnetic catches

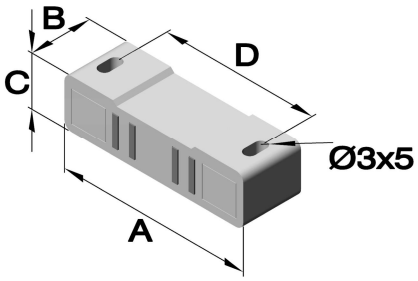

Article no.			Dimensions in mm				Force in kg
Series	Execution	Material	A	B	C	D	
		Plastic					
6470	.01	White	48,5	16,5	13	39	4

Art.no. 6470.04

Magnetic catches with striking plate

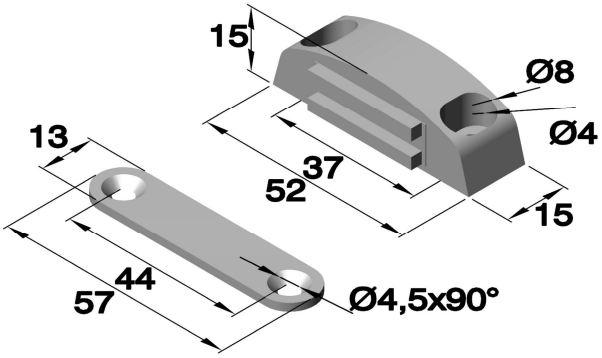

Article no.			Force in kg
Series	Execution	Material	
		Zamak	
6470	.04	Nickel-plated	4

Art. no.: 6470.06

Magnetic catches with striking plate

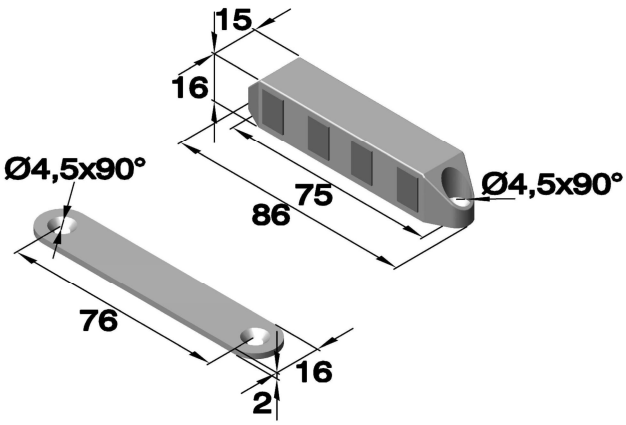

Article no.			Force in kg	Temp. in C°
Series	Execution	Material		
		Zamak		
6470	.06.01	Nickel-plated	8	up to 80°
6470	.06.02	Nickel-plated	8	up to 300°

TÜVRheinland ZERTIFIZIERT Management System ISO 9001:2015 ISO 14001:2015 www.tuv.com ID 9108624624

Further materials and surface finishes on demand. We will be pleased to give you advice.
Phone: +49 (0) 231 / 725 790 -0 eMail: info@hokon-verschlusstechnik.de
Fax: +49 (0) 231 / 725 790 -10 Homepage: www.hokon-verschlusstechnik.de

Magnetic catches

Art. no.: 6470.07

Magnetic catches with striking plate

Article no.			Force in kg	Temp. in C°
Series	Execution	Material Zamak		
6470	.07.01	Nickel-plated	4	up to 80°
6470	.07.02	Nickel-plated	4	up to 300°

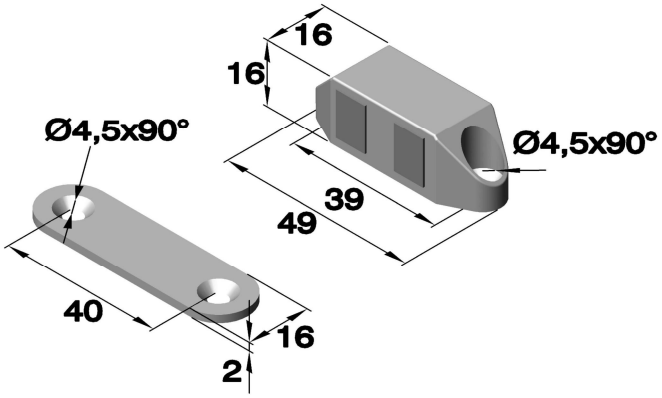

Art. no.: 6470.08

Magnetic catches with striking plate

Article no.			Force in kg
Series	Execution	Material Plastic	
6470	.08	White	2-3

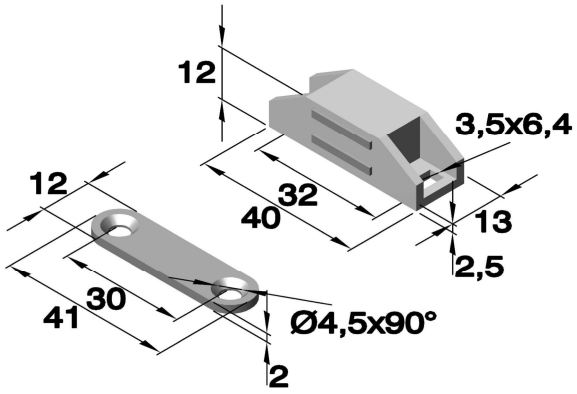

Art. no.: 6470.09

Magnetic catches with striking plate

Article no.			Dimensions in mm							Force in kg
Series	Execution	Material Plastic	A	B	C	D	E	F	G	
6470	.09.01	White	86	13	15	77	12	57	70	4,8
6470	.09.02	White	105,3	16	18	94	14	65	79	5,6

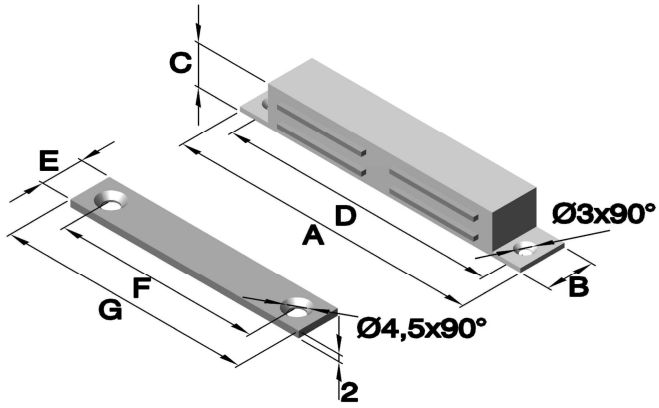

Magnetic catches

Art. no.: 6470.11

Magnetic catches

Hole pattern

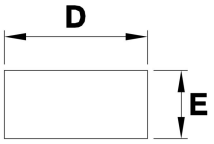

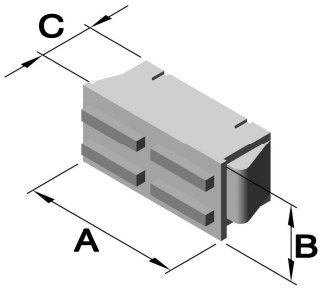

Article no.			Dimensions in mm						Force in kg
Series	Execution	Material Polypropylene	A	B	C	D	E	Sheet thickness	
6470	.11.01	White	25,5	12,3	10,4	23	11	1,5	1,5
6470	.11.02	White	25,5	9,6	11	23	8,2	1,5	1,8
6470	.11.03	White	39,5	10	11	35	8,2	1,5	4
6470	.11.04	Black	54	12,5	14,5	51,5	10,8	2,0	15

Art. no.: 6470.11.08

Housing for Art. no.: 6470.11.04

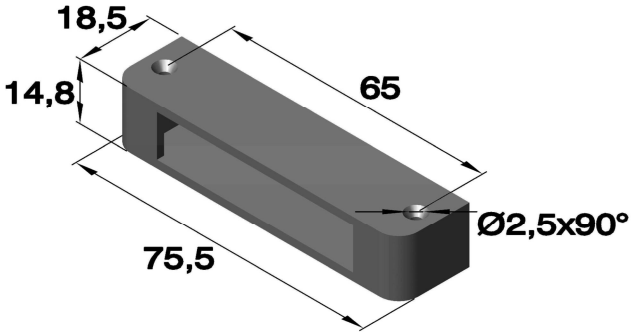

Article no.		
Series	Execution	Material Plastic
6470	.11.08	Black

Art. no.: 6470.12

Magnetic catches

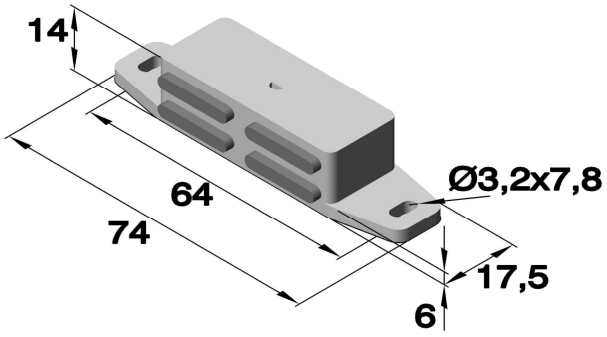

Article no.			Force in kg
Series	Execution	Material Plastic	
6470	.12	White	12

Art. no.: 6470.13

Magnetic catches

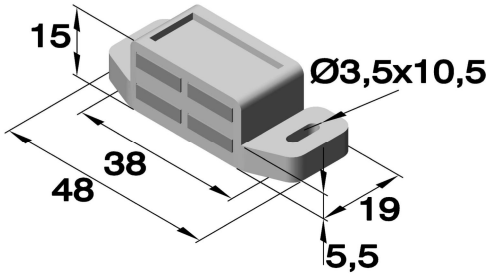

Article no.			Force in kg
Series	Execution	Material Plastic	
6470	.13	White	4

TÜVRheinland ZERTIFIZIERT Management System ISO 9001:2015 ISO 14001:2015 www.tuv.com ID 9108624624

Further materials and surface finishes on demand. We will be pleased to give you advice.
Phone: +49 (0) 231 / 725 790 -0 eMail: info@hokon-verschlusstechnik.de
Fax: +49 (0) 231 / 725 790 -10 Homepage: www.hokon-verschlusstechnik.de

Magnetic catches

Art. no.: 6470.14

Striking plate for Art. no.: 6470.11
Art. no.: 6470.11
Art. no.: 6470.13

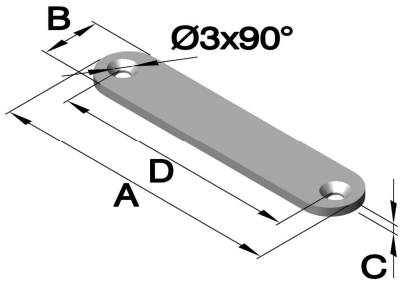

Article no.			Dimensions in mm			
Series	Execution	Material Steel	A	B	C	D
6470	.14.02	Zinc plated	41	14	1,5	31
6470	.14.04	Zinc plated	66	12	2	54

Art. no.: 6470.15

Magnetic catches with striking plate

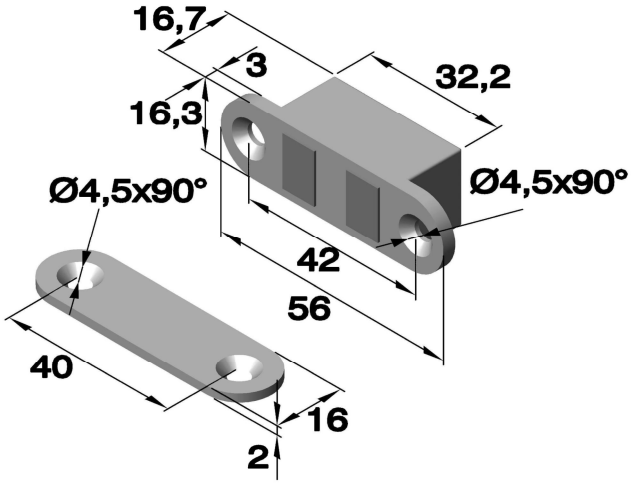

Article no.			Force in kg	Temp. in C°
Series	Execution	Material Zamak		
6470	.15	Nickel-plated	4	up to 150°

Art. no.: 6470.16.01

Magnetic catches

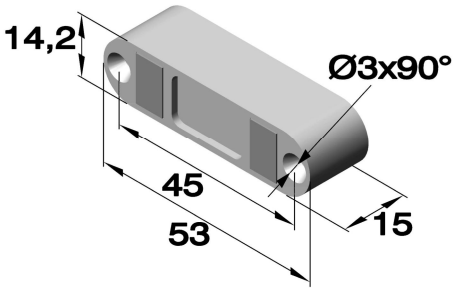

Article no.			Force in kg
Series	Execution	Material Plastic	
6470	.16.01	White	4

Art. no.: 6470.16.02

Striking plate for Art. no.: 6470.16.01

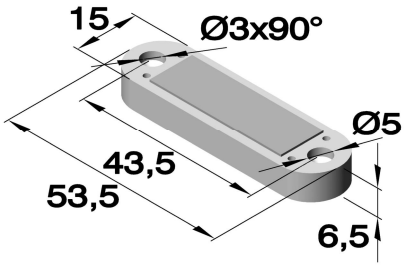

Article no.		
Series	Execution	Material Plastic
6470	.16.02	White

Magnetic catches

Art. no.: 6470.17

Magnetic catches

Article no.			Force in kg	Temp. in C°
Series	Execution	Material: Steel		
6470	.17	Nickel-plated	2,7	up to 80°

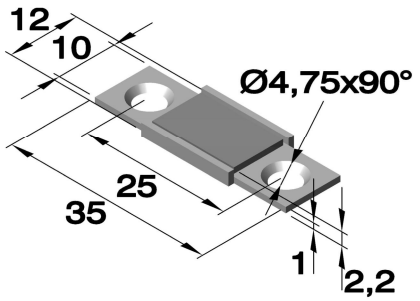

Art. no.: 6470.28

Magnetic catches

Article no.			Force	Temp.
Series	Execution	Material: Steel	in kg	in C°
6470	.28.01	Nickel-plated	4	up to 80°

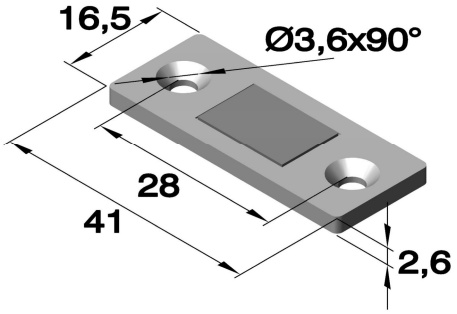

Art. no.: 6470.18

Striking plate for
Art. no.: 6470.19.04
Art. no.: 6470.20.07
Art. no.: 6470.21.70
Art. no.: 6470.22.70

Article no.		
Series	Execution	Material: Steel
6470	.18.04	Zinc plated

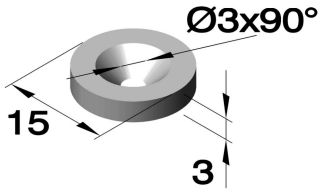

Art. no.: 6470.19

Retractable magnetic catches

Article no.			Sheet thickness in mm	Force in kg
Series	Execution	Material: Steel		
6470	.19.04	Zinc plated	max 16	5

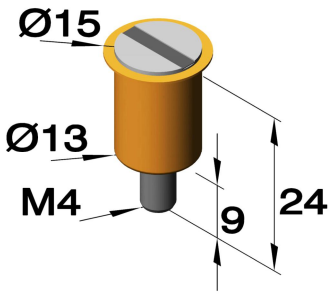

TÜVRheinland ZERTIFIZIERT
Management System ISO 9001:2015 ISO 14001:2015
www.tuv.com ID 9108624624

Further materials and surface finishes on demand. We will be pleased to give you advice.
Phone: +49 (0) 231 / 725 790 -0 eMail: info@hokon-verschlusstechnik.de
Fax: +49 (0) 231 / 725 790 -10 Homepage: www.hokon-verschlusstechnik.de

Magnetic catches

Art. no.: 6470.20

Retractable magnetic catches

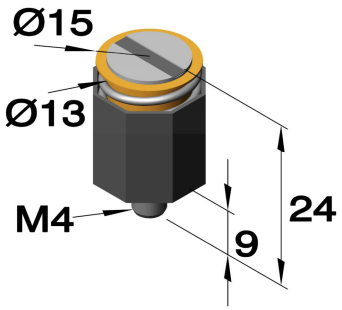

Article no.				Sheet thickness in mm	Force in kg
Series	Execution	Material			
		Steel	Plastic		
6470	.20.07	Zinc plated	Black	max 3	4,2

Art. no.: 6470

Retractable magnetic catches

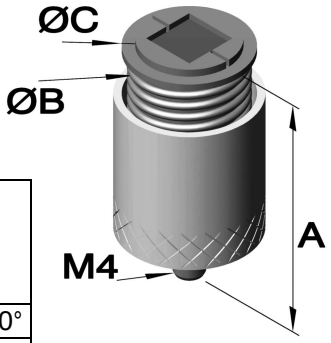

Article no.				Dimensions in mm				Force in kg	Temp. in C°
Series	Execution	Material		A	B	C	Sheet thickness		
		Steel	Aluminium						
6470	.21.70	Zinc plated	Raw	26	13	15	max 3	4,2	up to 250°
6470	.22.70	Zinc plated	Raw	31	16	20	max 3	8	up to 250°

Art. no.: 6470

Magnetic catches

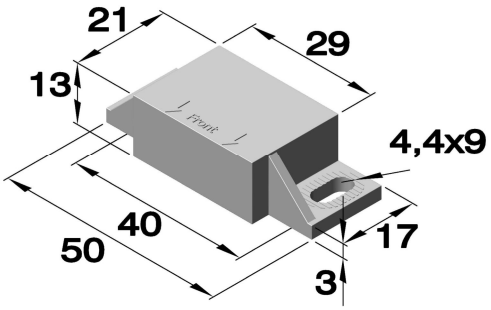

Article no.			Force in kg
Series	Execution	Material	
		Plastic	
6470	.25.01	White	3
6470	.27	Black	3

Art. no.: 6470.26

Striking plate for Art. no.: 6470.25.01
Art. no.: 6470.27

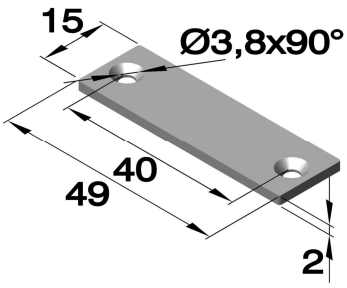

Article no.		
Series	Execution	Material
		Stainless steel
6470	.26	.30

Magnetic catches

Art. no.: 6470.29

Adhesive magnetic tape

Article no.			Force in g/cm²	Temp. in C°
Series	Execution	Material flexible magnet		
6470	.29	adhesive	55	up to 100°

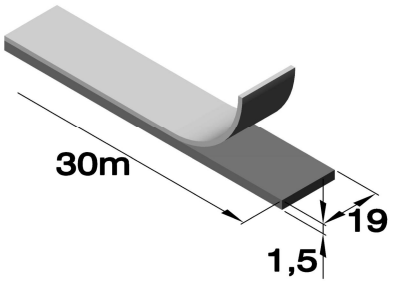

Art. no.: 6470

Magnetic catches

Article no.			Sheet thickness in mm	Force in kg
Series	Execution	Material Plastic		
6470	.30	Black	1,6 und 2,6	1,2
6470	.31	Black	1,6 und 2,6	3

Hole pattern		
Sheet thickness	A	B
1,6 mm	26	6,5
2,6mm	24,6	5,8

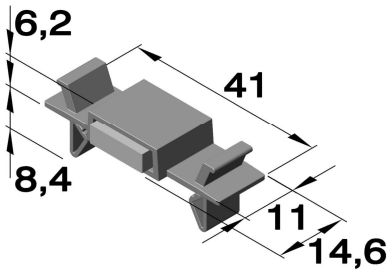

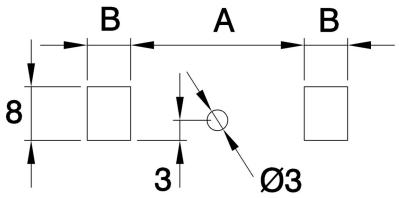

Art. no.: 6470.32

Magnetic catches

Article no.			Force in kg
Series	Execution	Material Plastic	
6470	.32.01	White	3

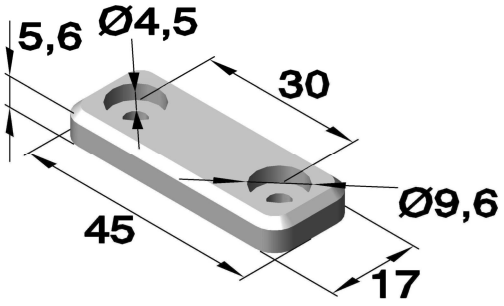

Art. no.: 6470.32

Striking plate for art. no.: 6470.32.01

Article no.		
Series	Execution	Material Plastic
6470	.32.02	White

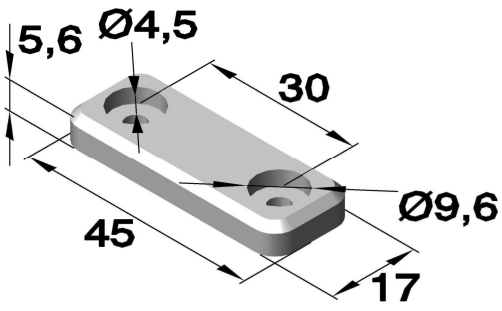

TÜVRheinland ZERTIFIZIERT Management System ISO 9001:2015 ISO 14001:2015 www.tuv.com ID 9108624624

Further materials and surface finishes on demand. We will be pleased to give you advice.
Phone: +49 (0) 231 / 725 790 -0 eMail: info@hokon-verschlusstechnik.de
Fax: +49 (0) 231 / 725 790 -10 Homepage: www.hokon-verschlusstechnik.de

Hood catches

Art. no.: 7020 „hood catches big“

Complete with assembly kit

Materials and surface finish:
EPDM, black, 60+5 shore A
Zinc plated steel

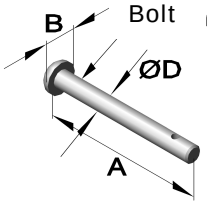

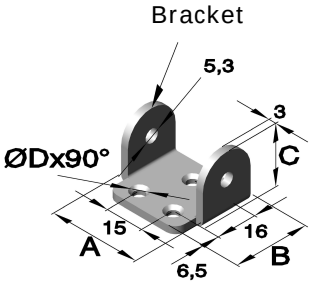

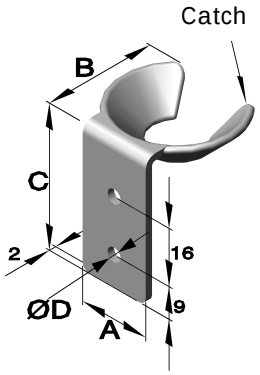

Delivery of individual parts is possible

Article no.		Description	Dimensions in mm			
Series	Material		A	B	C	Ø D
7001	EPDM, black	hood catches	60	26	124	5
7005	zinc plated steel	catch	20	29	42	4,2
7006	zinc plated steel	bracket	30	30	24	4,2
7007	zinc plated steel	bolts	47	9	-	5
7008	zinc plated steel	plate	-	-	-	-
7009	zinc plated steel	splint	-	-	-	-

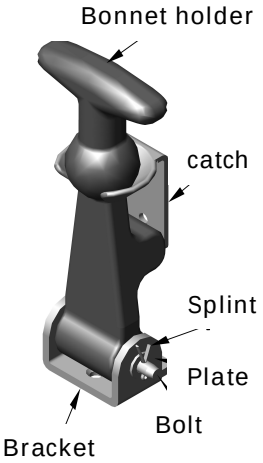

Art. no.: 7050 „hood catches small“

Complete with assembly kit

Materials and surface finish:
CR, black, 60+5 shore A
Zinc plated steel

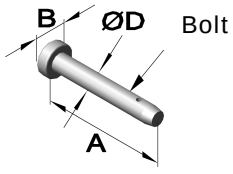

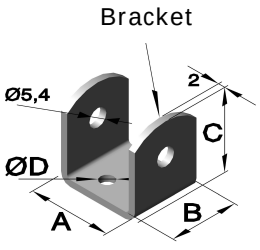

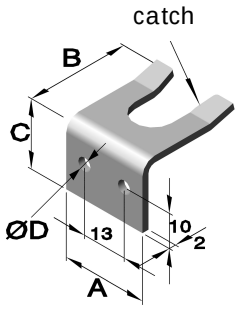

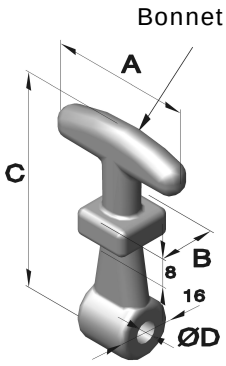

Delivery of individual parts is possible

Article no.		Description	Dimensions in mm			
Series	Material		A	B	C	Ø D
7030	CR, black	hood catches	40	16	64	5
7035	zinc plated steel	catch	24	20	24	4,2
7036	zinc plated steel	bracket	24	20	24	4,2
7037	zinc plated steel	bolts	35	9	-	5
7038	zinc plated steel	plate	-	-	-	-
7039	zinc plated steel	splint	-	-	-	-

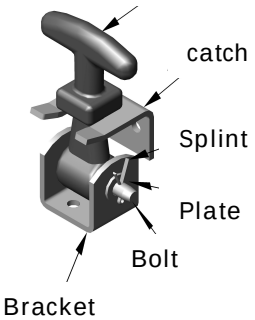

Phone: +49 (0) 231 / 725 790 -0
Fax: +49 (0) 231 / 725 790 -10
eMail: info@hokon-verschlusstechnik.de
Homepage: www.hokon-verschlusstechnik.de

HoKon

VERSCHLUSSTECHNIK &
SONDERKONSTRUKTIONEN

Zertifiziert nach DIN EN ISO 9001:2008



Keenserts

Recoil

TÜVRheinland
ZERTIFIZIERT
Management System
ISO 9001:2015
ISO 14001:2015
www.tuv.com
ID 9108624624

HoKon
VERSCHLUSSTECHNIK &
SONDERKONSTRUKTIONEN



FOLDER 6 THREADED INSERTS

FOLDER 1 LATCHES

FOLDER 2 TENSION BANDS

FOLDER 3 HANDLES

FOLDER 4 HINGES

FOLDER 5 LOCKING DEVICES

FOLDER 6 THREADED INSERTS

KEENSERTS.....

RECOIL ..... R

SNEP-SELF LOCKING NUTS..... S-1

FOLDER 7 SUNDRIES

GENERAL TERMS AND CONDITIONS.....

Phone: +49 (0) 231 / 725 790 -0 eMail: info@hokon-verschlusstechnik.de
Fax: +49 (0) 231 / 725 790 -10 Homepage: www.hokon-verschlusstechnik.de

Camloc
Traditionally Innovative

KEENSERTS®









Camloc
Traditionally Innovative

Contents

Page

General Information A-2

Features of KEENSERTS® ..... A-3 - A-4

Installation Instructions A-5
KNCM Series (miniature inserts metric)..... B-1
KNM Series (lightweight inserts metric)..... B-2
KNHM Series (heavy duty inserts metric)..... B-3 - B-4
KNCA Series (miniature inserts imperial)..... C-1
KNJ Series (lightweight inserts imperial)..... C-2 - C-3
KNHJ Series (heavy duty inserts imperial)..... C-4 - C-7
KNHXHJ Series (extra heavy duty inserts imperial)..... C-8 - C-11

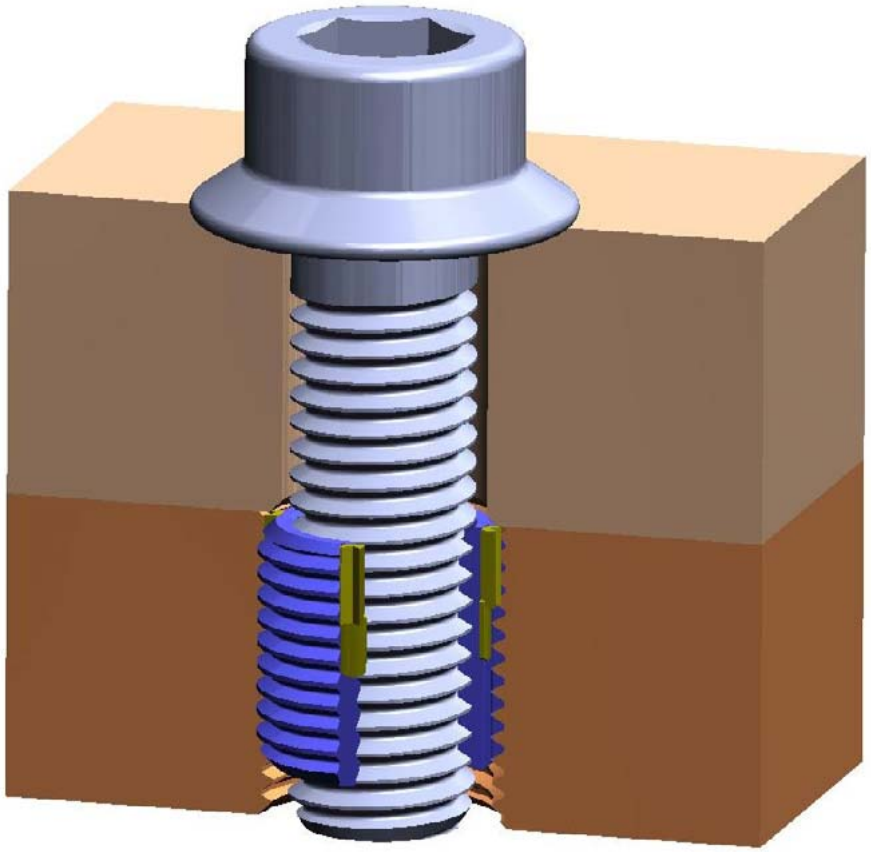

The Camloc brand was established in 1937. Since that time our fastening systems have been successfully integrated into numerous applications within many different industries.

Our customers benefit from our more than 75 years of fastening experience.

We provide local support for innovative, high quality fastening systems supplied globally to the strictest environmental and working conditions.



bsi.

Certificate of Registration

QUALITY MANAGEMENT SYSTEM - ISO/TS 16949:2009

This is to certify that:

Alcoa Fastening Systems
Kelkheim Operations
Fairchild Fasteners Europe-Camloc GmbH
Industriestraße 8
65779 Kelkheim
Germany

Holds Certificate No: **TS 515931**

and operates a Quality Management System which complies with the requirements of ISO/TS 16949:2009 for the following scope:

Design and manufacture of fasteners and fastener solutions.

For and on behalf of BSI:

Gary Fenton, Chair, Certification Body Management Committee

Originally registered: 04/05/2013 Latest Issue: 04/05/2013 Expiry Date: 03/05/2016

IATF Number: 0162255

Page: 1 of 1

...making excellence a habit.

This certificate was issued electronically and remains the property of BSI and is bound by the conditions of contract.
An electronic certificate can be authenticated online.
Printed copies can be validated at www.bsi-global.com/ClientDirectory or telephone +49 (0)6181/9937-0.
Further clarifications regarding the scope of this certificate and the applicability of ISO/TS16949 requirements may be obtained by consulting the organization.

ISO/TS 16949: 2009



bsi.

Certificate of Registration

ENVIRONMENTAL MANAGEMENT SYSTEM - ISO 14001:2004

This is to certify that:

Alcoa Fastening Systems
Kelkheim Operations
Fairchild Fasteners Europe-Camloc GmbH
Industriestraße 8
65779 Kelkheim
Germany

Holds Certificate No: **EMS 518280**

and operates an Environmental Management System which complies with the requirements of ISO 14001:2004 for the following scope:

Design and manufacture of fasteners and fastener solutions

For and on behalf of BSI:

Gary Fenton, Global Assurance Director

Originally registered: 05/07/2007 Latest Issue: 20/03/2013 Expiry Date: 17/03/2016

Page: 1 of 1

...making excellence a habit.

This certificate was issued electronically and remains the property of BSI and is bound by the conditions of contract.
An electronic certificate can be authenticated online.
Printed copies can be validated at www.bsi-global.com/ClientDirectory or telephone +971 (4) 3364917.

DIN EN ISO 14001 : 2004

Please find additional information about our environmental program under: **www.alcoa.com**.

Your Alcoa Fastening Systems team

Disclaimer:

Parts listed are subject to technical changes. All dimensions in mm. All information is correct to the best of our knowledge at the time of printing. No liability for disadvantages caused by printing errors or false application.

Threaded Inserts

KEENSERTS® are high strength threaded inserts made from stainless steel 1.4305 or AISI303. They are passivated according to EN 2516 or AMS 2700. Our KEENSERTS® standard product range contains metric and imperial thread dimensions. Specials are available upon request.

KEENSERTS® can be used in alloys, light materials, steel and cast iron to give increased thread strength in these low strength materials. They are also be used for thread repair enabling the damaged thread to be replaced with the same size thread.

KEENSERTS® Solid configuration gives a high cycle life with multiple tightening and loosening of the bolt. Locking inserts have a dry film lubrication on the surface to protect the screw from galling.

KEENSERTS® have a positive mechanical lock against rotation and vibration when kees are installed. Kees are made from stainless steel AISI302.

KEENSERTS® have 2 or 4 pre-assembled kees depending on the size of the external thread. After installation of the kees into the parent material the assembly is positively locked in place.

Pull-out-strength for KEENSERTS®. Calculation is as follows:

Pull-out-strength(N) = shear engagement (mm^2) x ultimate shear strength of parent material (N/mm^2)
Shear engagement areas are shown on the KEENSERTS® data sheets, only valid for full installed KEENSERTS®.

Part-no. example:

The part-no. for metric KEENSERTS® are coded as follows:

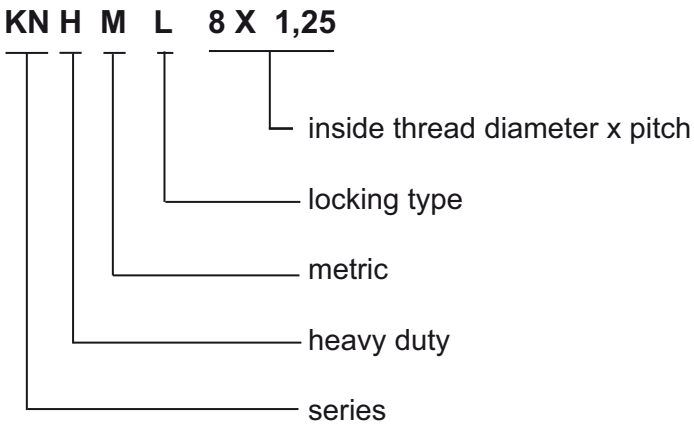

The part-no. for imperial KEENSERTS® are coded as follows:

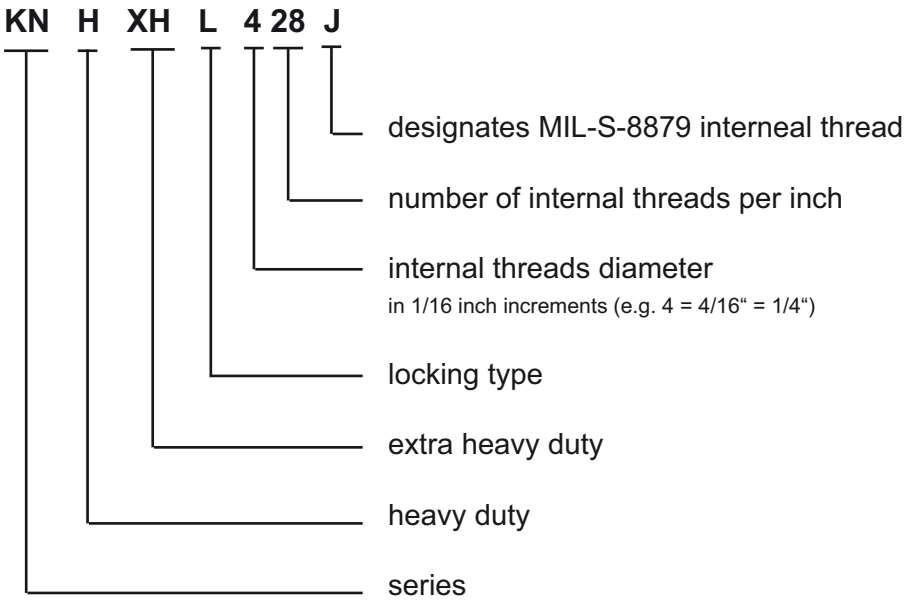

Installation:

Drill	- with standard drill
Countersink	- with cone countersink (80° - 100°)
Thread	- with standard tap
Screw in	- by hand or with installation tool (see installation data pages B-1 to B-4)
Lock in Place	- drive the kees into place by hand or in a press with the appropriate installation tool

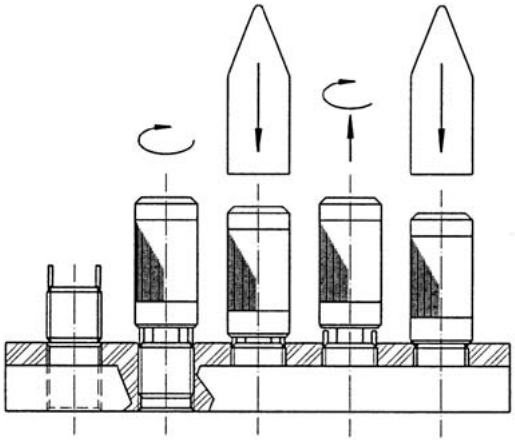

Installation depth of the KEENSERTS® is determined by the pre-assembled kees.
The installed depth of the KEENSERTS® is based on the depth of the countersink.

Installation in hard materials



For very hard materials with a hardness greater than 30 HRC or 300 Vickers it is necessary to pre-broach the slots for the kees. The first step is to mark the position of the kees on the parent material. To do this wind the KEENSERTS® in until the kees touch the surface of the parent material.
Mark the positions of the kees and unwind the KEENSERTS®.
Then line up the blades of the broaching tool with the marked positions and push it in with a hammer or under a press, remove the tool and install the KEENSERTS®.
In some cases it may be necessary to run the tap back down the hole to clear out any burrs.
Available for external metrical thread M5 and up and external imperial thread 1/4“ and up.

Removal:

1. Drilling Dimensions see pages B1 to B4

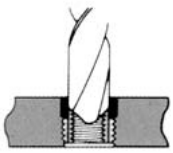

2. Deflect kees inward and break off

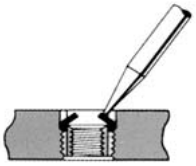

3. Remove insert with E-Z out type tool

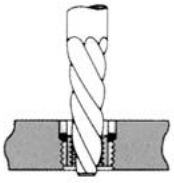

4. Insert new KEENSERTS® as before



KNCM Series

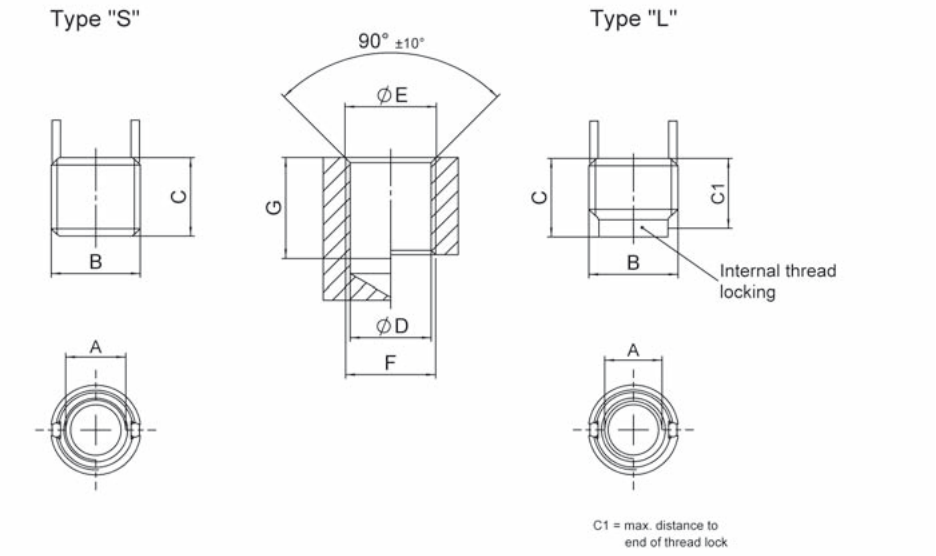

Part-no.		Dimensions				
Standard type "S"	Locking type "L"	Thread A Ø A class 5H	Thread B Ø B class 4h	Shear engagement mm²	C ± 0,25	C1
KNCM2X0,4		M2X0,4	M4X0,7	16,5	3	
	KNCML2X0,4			10,3		2,2
KNCM2,5X0,45		M2,5X0,45	M4,5X0,75	26,5	3,8	
	KNCML2,5X0,45			15,9		2,7
KNCM3X0,5		M3X0,5	M5X0,8	33,1	4,25	
	KNCML3X0,5			21,4		3,1
KNCM4X0,7		M4X0,7	M6X0,75	58,4	5,25	
	KNCML4X0,7			42,9		4,1

Part-no.	Installation dimensions					Removal dimensions	
	Ø D modified tap drill Ø	Ø E counter-sink Ø + 0,25	Thread F		Hand installation tool part-no.	Drill	
			Ø F class 6H	G min.		Ø	Depth
KNCM2X0,4	3,4 +0,080 -0,025	4,1	M4X0,7	4,0	KRTM2-01	2,8	2,00
KNCML2X0,4							
KNCM2,5X0,45	3,9 +0,080 -0,025	4,6	M4,5X0,75	5,0	KRTM2,5-01	3,0	2,00
KNCML2,5X0,45							
KNCM3X0,5	4,4 +0,080 -0,025	5,1	M5X0,8	5,5	KRTM3-01	3,5	2,25
KNCML3X0,5							
KNCM4X0,7	5,5 +0,080 -0,025	6,1	M6X0,75	6,5	KRTM4-01	4,6	2,50
KNCML4X0,7							

KNM Series

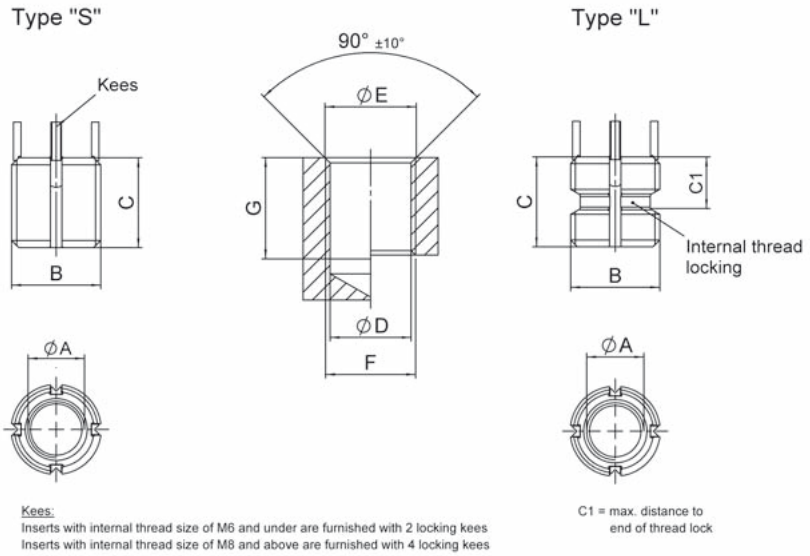

Kees:
Inserts with internal thread size of M6 and under are furnished with 2 locking kees
Inserts with internal thread size of M8 and above are furnished with 4 locking kees

C1 = max. distance to end of thread lock

Part-no.		Dimensions				
Standard type "S"	Locking type "L"	Thread A Ø A class 5H	Thread B Ø B class 4h	Shear engagement mm²	C ± 0,30	C1
KNM5X0,8		M5X0,8	M8X1,25	104,9	8	
	KNML5X0,8			83,1		7,6
KNM6X1,0		M6X1,0	M10X1,25	177,7	10	
	KNML6X1,0			152,7		8,2
KNM8X1,25		M8X1,25	M12X1,25	266,7	12	
	KNML8X1,25			242,7		9,5
KNM10X1,5		M10X1,5	M14X1,5	341,6	14	
	KNML10X1,5			316,4		10,0
KNM12X1,75		M12X1,75	M16X1,5	470,2	16	
	KNML12X1,75			441,4		11,2

Part-no.	Installation dimensions					Removal dimensions	
	Ø D modified tap drill Ø	Ø E counter-sink Ø + 0,25	Thread F		Hand installation tool part-no.	Drill	
			Ø F class 6H	G min.		Ø	Depth
KNM5X0,8	6,90 +0,100 -0,025	8,25	M8X1,25	9,5	KRTM5-01	5,5	4,00
KNML5X0,8							
KNM6X1,0	8,80 +0,100 -0,025	10,25	M10X1,25	11,5	KRTM6-01	7,5	4,75
KNML6X1,0							
KNM8X1,25	10,80 +0,100 -0,025	12,25	M12X1,25	13,5	KRTM8-01	9,5	4,75
KNML8X1,25							
KNM10X1,5	12,80 +0,130 -0,025	14,25	M14X1,5	15,5	KRTM10-01	11,5	4,75
KNML10X1,5							
KNM12X1,75	14,75 +0,130 -0,025	16,25	M16X1,5	17,5	KRTM12-01	13,5	4,75
KNML12X1,75							

KNHM Series

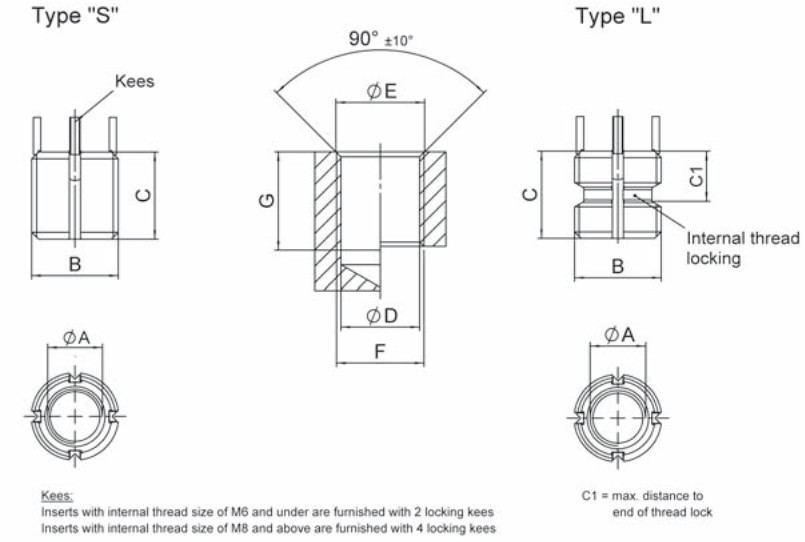

Kees:
Inserts with internal thread size of M6 and under are furnished with 2 locking kees
Inserts with internal thread size of M8 and above are furnished with 4 locking kees

C1 = max. distance to end of thread lock

Part-no.		Dimensions				
Standard type "S"	Locking type "L"	Thread A Ø A class 5H	Thread B Ø B class 4h	Shear engagement mm²	C ± 0,30	C1
KNHM4X0,7		M4X0,7	M8X1,25	104,9	8	
	KNHML4X0,7			83,1		8,0
KNHM5X0,8		M5X0,8	M10X1,25	177,1	10	
	KNHML5X0,8			152,7		8,7
KNHM6X1,0		M6X1,0	M12X1,25	266,7	12	
	KNHML6X1,0			242,5		9,5
KNHM8X1,25		M8X1,25	M14X1,5	341,6	14	
	KNHML8X1,25			316,4		10,0
KNHM10X1,5		M10X1,5	M16X1,5	470,2	16	
	KNHML10X1,5			441,4		10,0
KNHM12X1,75		M12X1,75	M18X1,5	608,5	18	
	KNHML12X1,75			561,8		10,7

Part-no.	Installation dimensions					Removal dimensions	
	Ø D modified tap drill Ø	Ø E counter-sink Ø + 0,25	Thread F		Hand installation tool part-no.	Drill	
			Ø F class 6H	G min.		Ø	Depth
KNHM4X0,7 KNHML4X0,7	6,90 +0,100 -0,025	8,25	M8X1,25	9,5	KRTM4-02	5,5	4,00
KNHM5X0,8 KNHML5X0,8	8,80 +0,100 -0,025	10,25	M10X1,25	12,5	KRTM5-02	7,5	4,75
KNHM6X1,0 KNHML6X1,0	10,80 +0,100 -0,025	12,25	M12X1,25	14,5	KRTM6-02	9,5	4,75
KNHM8X1,25 KNHML8X1,25	12,80 +0,130 -0,025	14,25	M14X1,5	16,5	KRTM8-02	11,5	4,75
KNHM10X1,5 KNHML10X1,5	14,75 +0,130 -0,025	16,25	M16X1,5	18,5	KRTM10-02	13,5	4,75
KNHM12X1,75 KNHML12X1,75	16,75 +0,130 -0,025	18,25	M18X1,5	20,5	KRTM12-02	15,5	4,75

KNHM Series

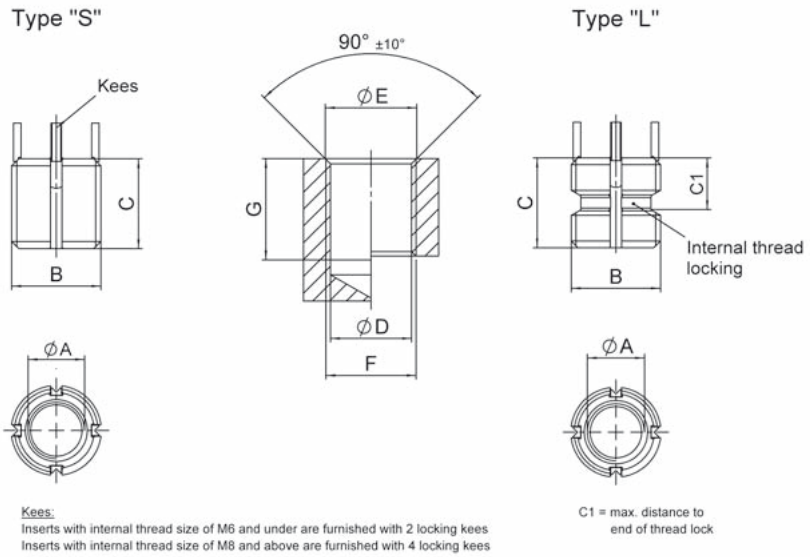

Kees:
Inserts with internal thread size of M6 and under are furnished with 2 locking kees
Inserts with internal thread size of M8 and above are furnished with 4 locking kees

C1 = max. distance to end of thread lock

Part-no.		Dimensions				
Standard type "S"	Locking type "L"	Thread A Ø A class 5H	Thread B Ø B class 4h	Shear engagement mm²	C ± 0,30	C1
KNHM14X2,0		M14X2,0	M20X1,5	770,5	20	
	KNHML14X2,0			724,4		12,4
KNHM16X2,0		M16X2,0	M22X1,5	896,8	22	
	KNHML16X2,0			855,2		12,4
KNHM18X1,5		M18X1,5	M24X1,5	1084,4	24	
	KNHML18X1,5			1051,5		16,8
KNHM20X2,5		M20X2,5	M30X2,0	1774,3	30	
	KNHML20X2,5			1736,4		17,5
KNHM24X3,0		M24X3,0	M33X2,0	2189,4	33	
	KNHML24X3,0			2161,9		19,0

Part-no.	Installation dimensions					Removal dimensions	
	Ø D modified tap drill Ø	Ø E counter-sink Ø + 0,25	Thread F		Hand installation tool part-no.	Drill	
			Ø F class 6H	G min.		Ø	Depth
KNHM14X2,0	18,75 +0,130 -0,025	20,25	M20X1,5	22,5	KRTM14-02	17,50	4,75
KNHML14X2,0							
KNHM16X2,0	20,50 +0,130 -0,025	22,25	M22X1,5	24,5	KRTM16-02	17,75	6,35
KNHML16X2,0							
KNHM18X1,5	22,50 +0,130 -0,025	24,25	M24X1,5	26,5	KRTM18-02	19,75	6,35
KNHML18X1,5							
KNHM20X2,5	28,00 +0,130 -0,025	30,25	M30X2,0	34,5	KRTM20-02	25,75	6,35
KNHML20X2,5							
KNHM24X3,0	31,00 +0,130 -0,025	33,25	M33X2,0	37,5	THM24	28,75	6,35
KNHML24X3,0							

KNCA Series

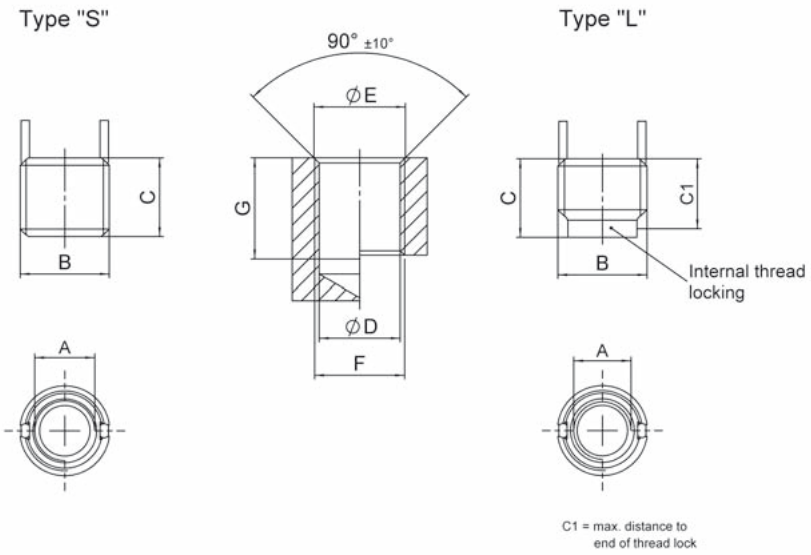

Part-no.		Dimensions				
Standard type "S"	Locking type "L"	Thread A Ø A	Thread B Ø B	Shear engagement inch² (mm²)	C inch (mm)	C1 inch (mm)
KNCA0256J		2-56" UNCJ-3B	8-32" UNC-3A	0,0157 (10,1)	0,12 (3,05)	0,088 (2,24)
KNCA0440J		4-40" UNCJ-3B	10-32" UNF-2A	0,0302 (19,5)	0,17 (4,32)	0,125 (3,18)
	KNCAL0440J			0,0302 (19,5)		0,125 (3,18)
KNC0632J		6-32" UNCJ-3B	12-28" UNF-2A	0,0329 (21,2)	0,17 (4,32)	0,125 (3,18)
	KNCL0632J			0,0329 (21,2)		0,125 (3,18)
KNCA0832J		8-32" UNCJ-3B	1/4-28" UNF-2A	0,0669 (43,2)	0,22 (5,59)	0,175 (4,45)
	KNCAL0832J			0,0669 (43,2)		0,175 (4,45)

Part-no.	Installation dimensions					Removal dimensions	
	Ø D modified tap drill Ø inch	Ø E counter-sink Ø inch	Thread F		Hand installation tool part-no.	Drill	
			Ø F	G min. inch (mm)		Ø inch (mm)	Depth inch (mm)
KNCA0256J	.134 +0,003 -0,001	.166 +.001 -.000	8-32 UNC-2B	0,140 (3,56)	TKNC02	0,133 (2,87)	1/16 (1,59)
KNCA0440J	.161 +0,003 -0,001	.194 +.001 -.000	10-32 UNF-2B	0,160 (4,06)	TKNC04	0,136 (3,45)	3/32 (2,38)
KNCAL0440J							
KNC0632J	.187 +0,003 -0,001	.220 +.001 -.000	12-28 UNF-2B	0,160 (4,06)	TKNC06	0,159 (4,04)	3/32 (2,38)
KNCL0632J							
KNCA0832J	.228 +0,003 -0,001	.225 +.001 -.000	1/4-28 UNF-2B	0,210 (5,33)	TKNC08	0,199 (5,05)	1/8 (3,18)
KNCAL0832J							

KNJ Series

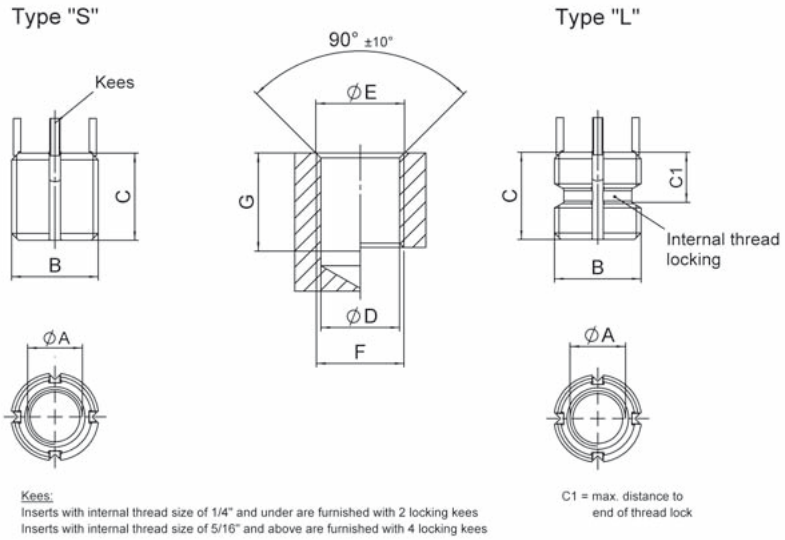

Part-no.		Dimensions				
Standard type "S"	Locking type "L"	Thread A Ø A class 3B	Thread B Ø B class 2A mod.	Shear engagement inch² (mm²)	C inch (mm)	C1 inch (mm)
KN1032J		10-32	5/16-18	0,1517 (97,9)	0,31 (7,87)	
	KNL1032J			0,0945 (60,9)		0,31 (7,87)
KN1024J		10-24	5/16-18	0,1517 (97,9)	0,31 (7,87)	
	KNL1024J			0,0945 (61,0)		0,31 (7,87)
KN428J		1/4-28	3/8-16	0,2371 (153,0)	0,37 (9,40)	
	KNL428J			0,1726 (111,4)		0,33 (8,38)
KN420J		1/4-20	3/8-16	0,2371 (153,0)	0,37 (9,40)	
	KNL420J			0,1726 (111,4)		0,36 (9,14)
KN524J		5/16-24	7/16-14	0,3049 (196,7)	0,43 (10,9)	
	KNL524J			0,2321 (149,7)		0,34 (8,64)
KN518J		5/16-18	7/16-14	0,3049 (196,7)	0,43 (10,9)	
	KNL518J			0,2321 (149,7)		0,37 (9,40)

Part-no.	Installation dimensions					Removal dimensions	
	Ø D modified tap drill Ø inch	Ø E countersink Ø inch +0,01 (mm)	Thread F		Hand installation tool part-no.	Drill	
			Ø F class 2B	G min. inch (mm)		Ø inch (mm)	Depth inch (mm)
KN1032J	0,272 (6,91)	0,323 (8,20)	5/16-18	0,37 (9,4)	TD1032L	7/32 (5,56)	5/32 (3,97)
KNL1032J							
KN1024J	0,272 (6,91)	0,323 (8,20)	5/16-18	0,37 (9,4)	TD1024L	7/32 (5,56)	5/32 (3,97)
KNL1024J							
KN428J	0,332 (8,43)	0,385 (9,78)	3/8-16	0,43 (10,9)	TD428L	9/32 (7,14)	3/16 (4,76)
KNL428J							
KN420J	0,332 (8,43)	0,385 (9,78)	3/8-16	0,43 (10,9)	TD420L	9/32 (7,14)	3/16 (4,76)
KNL420J							
KN524J	0,397 (10,08)	0,447 (11,35)	7/16-14	0,50 (12,7)	TD524L	11/32 (8,73)	3/16 (4,76)
KNL524J							
KN518J	0,397 (10,08)	0,447 (11,35)	7/16-14	0,50 (12,7)	TD518L	11/32 (8,73)	3/16 (4,76)
KNL518J							

KNJ Series

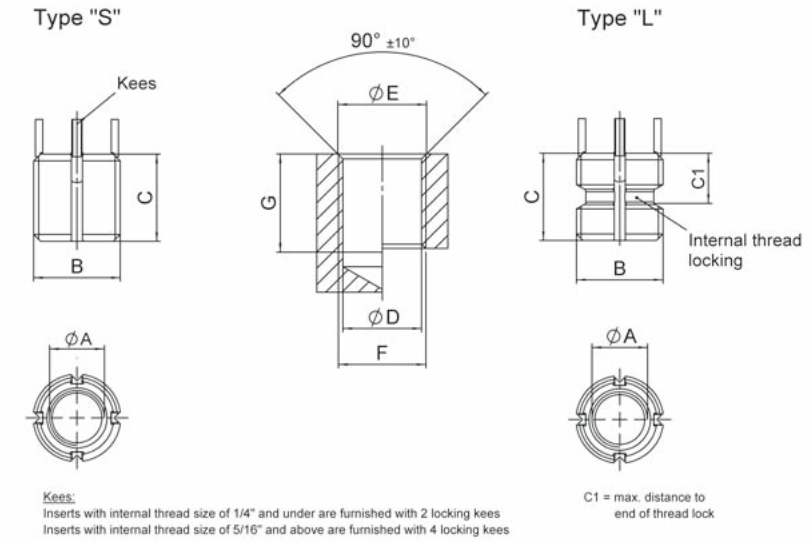

Part-no.		Dimensions				
Standard type "S"	Locking type "L"	Thread A Ø A class 3B	Thread B Ø B class 2A mod.	Shear engagement inch² (mm²)	C inch (mm)	C1 inch (mm)
KN624J		3/8-24	1/2-13	0,4299 (277,4)	0,50 (12,7)	
	KNL624J			0,3366 (217,2)		0,36 (9,14)
KN616J		3/8-16	1/2-13	0,4299 (277,4)	0,50 (12,7)	
	KNL616J			0,3366 (217,2)		0,40 (10,16)
KN720J		7/16-20	9/16-12	0,5665 (365,5)	0,56 (14,2)	
	KNL720J			0,4606 (297,2)		0,41 (10,41)
KN714J		7/16-14	9/16-12	0,5665 (365,5)	0,56 (14,2)	
	KNL714J			0,4606 (297,2)		0,45 (11,43)
KN820J		1/2-20	5/8-11	0,7175 (462,9)	0,62 (15,6)	
	KNL820J			0,5906 (381,0)		0,42 (10,67)
KN813J		1/2-13	5/8-11	0,7175 (462,9)	0,62 (15,6)	
	KNL813J			0,5906 (381,0)		0,47 (11,94)

Part-no.	Installation dimensions					Removal dimensions	
	Ø D modified tap drill Ø inch	Ø E countersink Ø inch +0,01 (mm)	Thread F		Hand installation tool part-no.	Drill	
			Ø F class 2B	G min. inch (mm)		Ø inch (mm)	Depth inch (mm)
KN624J	0,453 (11,51)	0,510 (12,95)	1/2-13	0,56 (14,2)	TD624L	13/32 (10,32)	3/16 (4,76)
KNL624J							
KN616J	0,453 (11,51)	0,510 (12,95)	1/2-13	0,56 (14,2)	TD616L	13/32 (10,32)	3/16 (4,76)
KNL616J							
KN720J	0,516 (13,11)	0,572 (14,53)	9/16-12	0,62 (15,7)	TD720-L	15/32 (11,91)	3/16 (4,76)
KNL720J							
KN714J	0,516 (13,11)	0,572 (14,53)	9/16-12	0,62 (15,7)	TD714L	15/32 (11,91)	3/16 (4,76)
KNL714J							
KN820J	0,578 (14,68)	0,635 (16,13)	5/8-11	0,68 (17,3)	TD820L	17/32 (13,49)	3/16 (4,76)
KNL820J							
KN813J	0,578 (14,68)	0,635 (16,13)	5/8-11	0,68 (17,3)	TD813L	17/32 (13,49)	3/16 (4,76)
KNL813J							

KNHJ Series

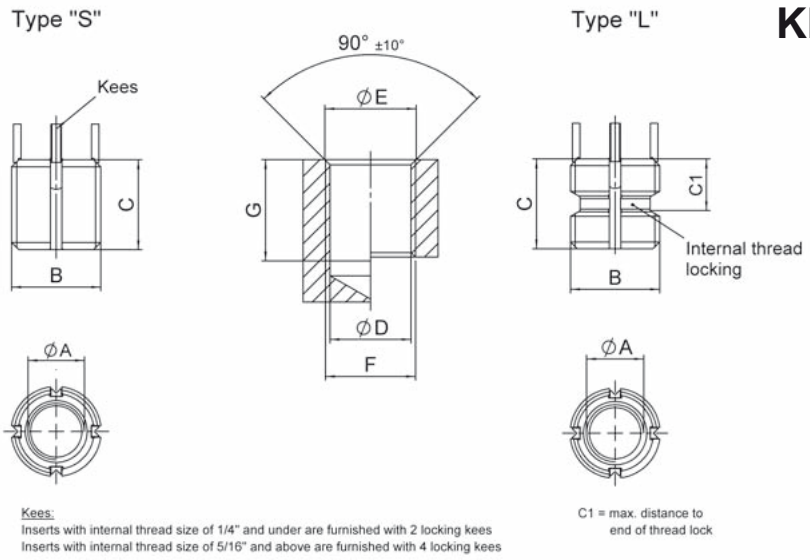

Part-no.		Dimensions				
Standard type "S"	Locking type "L"	Thread A Ø A class 3B	Thread B Ø B class 2A mod.	Shear engagement inch² (mm²)	C inch (mm)	C1 inch (mm)
KNH1032J		10-32	3/8-16	0,1901 (122,7)	0,31 (7,87)	
	KNHL1032J			0,1156 (74,6)		0,31 (7,87)
KNH1024J		10-24	3/8-16	0,1901 (122,7)	0,31 (7,87)	
	KNHL1024J			0,1156 (74,6)		0,31 (7,87)
KNH428J		1/4-28	7/16-14	0,2842 (183,4)	0,37 (9,40)	
	KNHL428J			0,1970 (127,1)		0,33 (8,38)
KNH420J		1/4-20	7/16-14	0,2842 (183,4)	0,37 (9,40)	
	KNHL420J			0,1970 (127,1)		0,33 (8,38)
KNH524J		5/16-24	1/2-13	0,3588 (231,5)	0,43 (10,9)	
	KNHL524J			0,2608 (168,3)		0,34 (8,64)

Part-no.	Installation dimensions					Removal dimensions	
	Ø D modified tap drill Ø inch	Ø E countersink Ø inch +0,01 (mm)	Thread F		Hand installation tool part-no.	Drill	
			Ø F class UNC-2B	G min. inch (mm)		Ø inch (mm)	Depth inch (mm)
KNH1032J	0,332 (8,43)	0,385 (9,78)	3/8-16	0,37 (9,4)	THD1032L	9/32 (7,14)	1/8 (3,18)
KNHL1032J							
KNH1024J	0,332 (8,43)	0,385 (9,78)	3/8-16	0,37 (9,4)	THD1024L	9/32 (7,14)	1/8 (3,18)
KNHL1024J							
KNH428J	0,397 (10,08)	0,447 (11,35)	7/16-14	0,43 (10,9)	THD428L	11/32 (8,73)	3/16 (4,76)
KNHL428J							
KNH420J	0,397 (10,08)	0,447 (11,35)	7/16-14	0,43 (10,9)	THD420L	11/32 (8,73)	3/16 (4,76)
KNHL420J							
KNH524L	0,453 (11,51)	0,510 (12,95)	1/2-13	0,50 (12,7)	THD524L	13/32 (10,32)	3/16 (4,76)
KNHL524L							

KNHJ Series

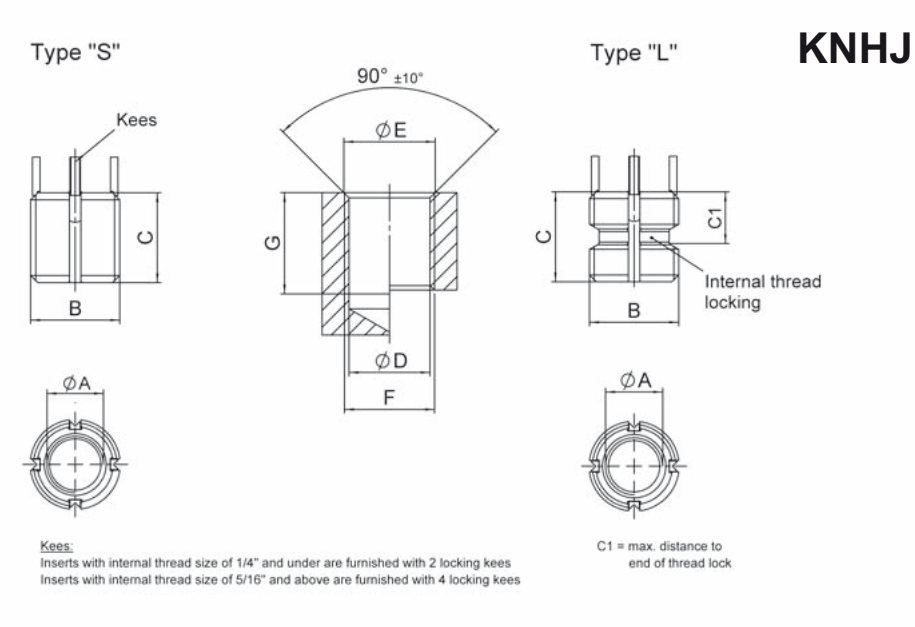

Part-no.		Dimensions				
Standard type "S"	Locking type "L"	Thread A Ø A class 3B	Thread B Ø B class 2A mod.	Shear engagement inch² (mm²)	C inch (mm)	C1 inch (mm)
KNH518J		5/16-18	1/2-13	0,3588 (231,5)	0,43 (10,9)	
	KNHL518J			0,2608 (168,3)		0,37 (9,40)
KNH624J		3/8-24	9/16-12	0,4975 (321,0)	0,50 (12,7)	
	KNHL624J			0,3843 (248,0)		0,37 (9,40)
KNH616J		3/8-16	9/16-12	0,4975 (321,0)	0,50 (12,7)	
	KNHL616J			0,3843 (248,0)		0,41 (10,41)
KNH720J		7/16-20	5/8-11	0,7172 (462,7)	0,62 (15,8)	
	KNHL720J			0,5831 (376,2)		0,42 (10,67)
KNH714J		7/16-14	5/8-11	0,7172 (462,7)	0,62 (15,8)	
	KNHL714J			0,5831 (376,2)		0,46 (11,68)

Part-no.	Installation dimensions					Removal dimensions	
	Ø D modified tap drill Ø inch	Ø E countersink Ø inch +0,01 (mm)	Thread F		Hand installation tool part-no.	Drill	
			Ø F class UNC-2B	G min. inch (mm)		Ø inch (mm)	Depth inch (mm)
KNH518J	0,453 (11,51)	0,510 (12,95)	1/2-13	0,50 (12,7)	THD518L	13/32 (10,32)	3/16 (4,76)
KNHL518J							
KNH624J	0,516 (13,11)	0,572 (14,53)	9/16-12	0,56 (14,2)	THD624L	15/32 (11,91)	3/16 (4,76)
KNHL624J							
KNH616J	0,516 (13,11)	0,572 (14,53)	9/16-12	0,56 (14,2)	THD616L	15/32 (11,91)	3/16 (4,76)
KNHL616J							
KNH720J	0,578 (14,68)	0,635 (16,13)	5/8-11	0,68 (17,27)	THD720L	17/32 (13,49)	3/16 (4,76)
KNHL720J							
KNH714L	0,578 (14,68)	0,635 (16,13)	5/8-11	0,68 (17,27)	THD714L	17/32 (13,49)	3/16 (4,76)
KNHL714L							

KNHJ Series

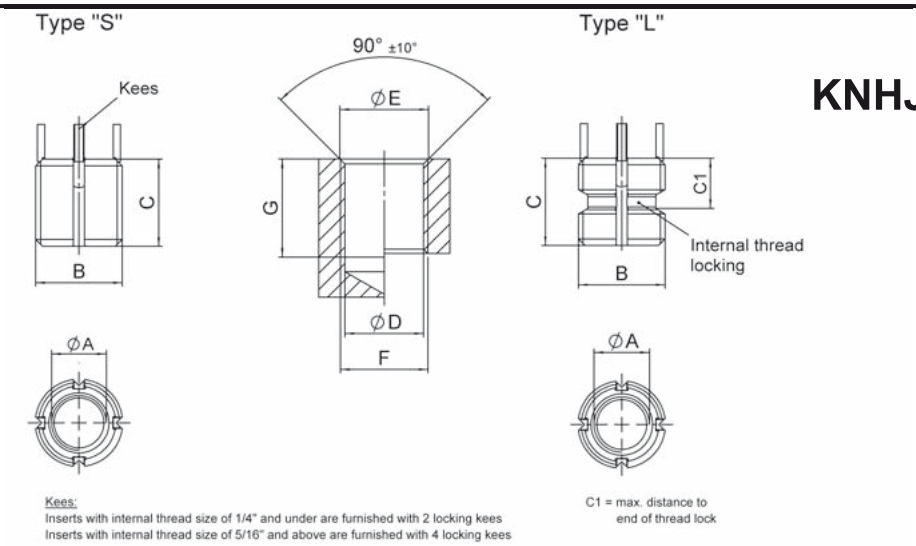

Part-no.		Dimensions				
Standard type "S"	Locking type "L"	Thread A Ø A class 3B	Thread B Ø B class 2A mod.	Shear engagement inch² (mm²)	C inch (mm)	C1 inch (mm)
KNH820J		1/2-20	11/16-11NS	0,8884 (573,2)	0,68 (17,3)	
	KNHL820J			0,7368 (475,4)		0,42 (10,67)
KNH813J		1/2-13	11/16-11NS	0,8884 (573,2)	0,68 (17,3)	
	KNHL813J			0,7368 (475,4)		0,47 (11,94)
KNH918J		9/16-18	13/16-16	1,2493 (806,0)	0,81 (20,6)	
	KNHL918J			1,0247 (661,1)		0,48 (12,19)
KNH912J		9/16-12	13/16-16	1,2493 (806,0)	0,81 (20,6)	
	KNHL912J			1,0247 (661,1)		0,54 (13,72)
KNH1018J		5/8-18	7/8-14	1,4866 (959,1)	0,87 (22,1)	
	KNHL1018J			1,2415 (801,0)		0,49 (12,47)
KNH1011J		5/8-11	7/8-14	1,4866 (959,1)	0,87 (22,1)	
	KNHL1011J			1,2415 (801,0)		0,57 (14,48)

Part-no.	Installation dimensions					Removal dimensions	
	Ø D modified tap drill Ø inch	Ø E countersink Ø inch +0,01 (mm)	Thread F		Hand installation tool part-no.	Drill	
			Ø F class UNC-2B	G min. inch (mm)		Ø inch (mm)	Depth inch (mm)
KNH820J	0,641 (16,28)	0,700 (17,80)	11/16-11NS	0,75 (19,06)	THD820L	19/32 (15,08)	3/16 (4,76)
KNHL820J							
KNH813J	0,641 (16,28)	0,700 (17,80)	11/16-11NS	0,75 (19,06)	THD813L	19/32 (15,08)	3/16 (4,76)
KNHL813J							
KNH918J	0,766 (19,46)	0,822 (20,88)	13/16-16UN	0,94 (23,88)	THD918L	23/32 (18,26)	3/16 (4,76)
KNHL918J							
KNH912J	0,766 (19,46)	0,822 (20,88)	13/16-16UN	0,94 (23,88)	THD912L	23/32 (18,26)	3/16 (4,76)
KNHL912J							
KNH1018L	0,828 (21,03)	0,885 (22,48)	7/8-14UNF	1,00 (25,40)	THD1018L	25/32 (19,84)	3/16 (4,76)
KNHL1018L							
KNH1011J	0,828 (21,03)	0,885 (22,48)	7/8-14 UNF	1,00 (25,40)	THD1011L	25/32 (19,84)	3/16 (4,76)
KNHL1011J							

KNHJ Series

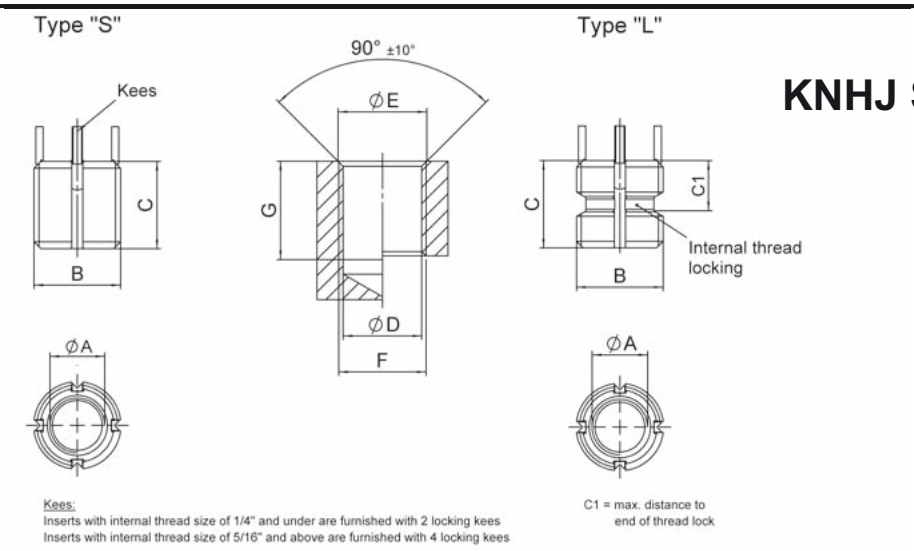

Part-no.		Dimensions				
Standard type "S"	Locking type "L"	Thread A Ø A class 3B	Thread B Ø B class 2A mod.	Shear engagement inch² (mm²)	C inch (mm)	C1 inch (mm)
KNH1216J		3/4-16	1-1/8-12	2,4901 (1606,5)	1,12 (28,5) 1,25 (31,8)	
	KNHL1216J			2,4478 (1579,3)		0,68 (17,27)
KNH1210J		3/4-10	1-1/8-12	2,4901 (1606,5)	1,12 (28,5) 1,25 (31,8)	
	KNHL1210J			2,4478 (1579,3)		0,75 (19,05)
KNH1414J		7/8-14	1-1/4-12	3,1370 (2024,1)	1,25 (31,8) 1,37 (34,8)	
	KNHL1414J			3,0775 (1985,6)		0,69 (17,53)
KNH1409J		7/8-9	1-14/12	3,1370 (2024,1)	1,25 (31,8) 1,37 (34,8)	
	KNHL1409J			3,0775 (1985,6)		0,77 (19,56)
KNH1612J		1-12	1-3/8-12	3,8381 (2476,3)	1,37 (34,8) 1,50 (38,1)	
	KNHL1612J			3,7929 (2447,2)		0,78 (19,81)
KNH1608J		1-8	1-3/8-12	3,8381 (2476,3)	1,37 (34,8) 1,50 (38,1)	
	KNHL1608J			3,7929 (2447,2)		0,86 (21,84)

Part-no.	Installation dimensions					Removal dimensions	
	Ø D modified tap drill Ø inch	Ø E countersink Ø inch +0,01 (mm)	Thread F		Hand installation tool part-no.	Drill	
			Ø F class UNC- 2B	G min. inch (mm)		Ø inch (mm)	Depth inch (mm)
KNH1216J	1,062 (26,97)	1,145 (29,08)	1-1/8-12 UNF	1,31 (33,27) 1,44 (36,58)	THD1216L	31/32 (24,61)	5/16 (7,94)
KNHL1216J							
KNH1210J	1,062 (26,97)	1,145 (29,08)	1-1/8-12 UNF	1,31 (33,27) 1,44 (36,58)	THD1210L	31/32 (24,61)	5/16 (7,94)
KNHL1210J							
KNH1414J	1,187 (30,15)	1,270 (32,26)	1-1/4-12 UNF	1,44 (36,58) 1,56 (39,62)	THD1414L	1-3/32 (27,78)	5/16 (7,94)
KNHL1414J							
KNH1409L	1,187 (30,15)	1,270 (32,26)	1-1/4-12 UNF	1,44 (36,58) 1,56 (39,62)	THD1409L	1-3/32 (27,78)	5/16 (7,94)
KNHL1409L							
KNH1612J	1,312 (33,32)	1,395 (35,43)	1-3/8-12 UNF	1,56 (39,62) 1,68 (42,67)	THD1612L	1-7/32 (30,96)	5/16 (7,94)
KNHL1612J							
KNH1608J	1,312 (33,32)	1,395 (35,43)	1-3/8-12 UNF	1,56 (39,62) 1,68 (42,67)	THD1608L	1-7/32 (30,96)	5/16 (7,94)
KNHL1608J							

KNHXHJ Series

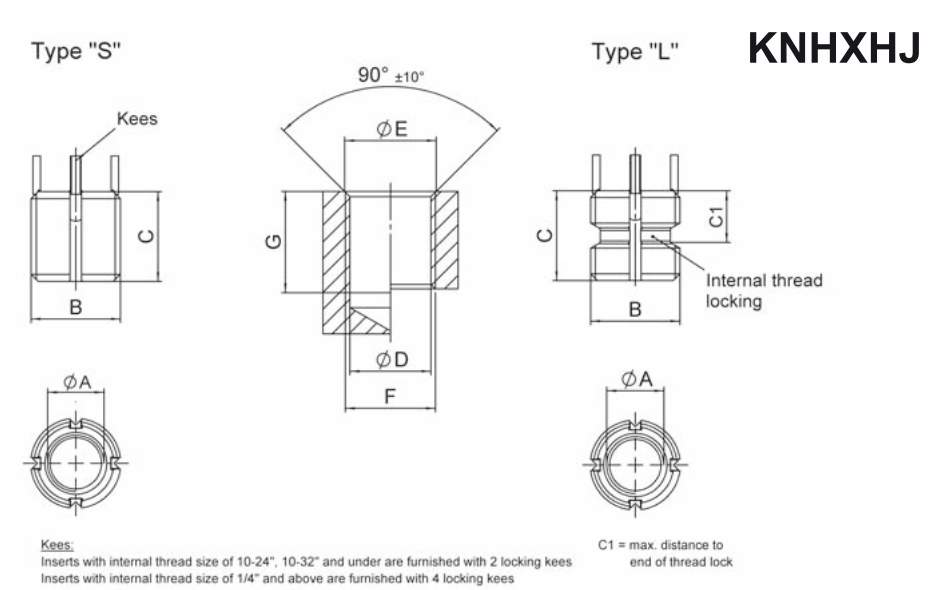

Part-no.		Dimensions				
Standard type "S"	Locking type "L"	Thread A Ø A class 3B	Thread B Ø B class 2A mod.	Shear engagement inch² (mm²)	C inch (mm)	C1 inch (mm)
KNHXH1032J		10-32	7/16-14	0,2299 (148,3)	0,31 (7,9)	
	KNHXHL1032J			0,1403 (90,5)		0,31 (7,90)
KNHXH1024J		10-24	7/16-14	0,2299 (148,3)	0,31 (7,9)	
	KNHXHL1024J			0,1403 (90,5)		0,31 (7,90)
KNHXH428J		1/4-28	1/2-13	0,2997 (193,4)	0,37 (9,4)	
	KNHXHL428J			0,2005 (129,4)		0,33 (8,38)
KNHXH420J		1/4-20	1/2-13	0,2997 (193,4)	0,37 (9,4)	
	KNHXHL420J			0,2005 (129,4)		0,36 (9,14)
KNHXH524J		5/16-24	9/16-12	0,4163 (268,6)	0,43 (10,9)	
	KNHXHL524J			0,3029 (195,4)		0,34 (8,64)

Part-no.	Installation dimensions					Removal dimensions	
	Ø D modified tap drill Ø inch	Ø E countersink Ø inch +0,01 (mm)	Thread F		Hand installation tool part-no.	Drill	
			Ø F class UNC- 2B	G min. inch (mm)		Ø inch (mm)	Depth inch (mm)
KNHXH1032J	0,397 (10,08)	0,447 (11,35)	7/16-14	0,37 (9,40)	THXHD1032L	11/32 (8,73)	3/16 (4,76)
KNHXHL1032J							
KNHXH1024J	0,397 (10,08)	0,447 (11,35)	7/16-14	0,37 (9,40)	THXHD1024L	11/32 (8,73)	3/16 (4,76)
KNHXHL1024J							
KNHXH428J	0,453 (11,51)	0,510 (12,95)	1/2-13	0,44 (11,18)	THXHD428L	13/32 (10,32)	3/16 (4,76)
KNHXHL428J							
KNHXH420J	0,453 (11,51)	0,510 (12,95)	1/2-13	0,44 (11,18)	THXHD420L	13/32 (10,32)	3/16 (4,76)
KNHXHL420J							
KNHXH524J	0,516 (13,11)	0,572 (14,53)	9/16-12	0,50 (12,70)	THXHD524L	15/32 (11,91)	3/16 (4,76)
KNHXHL524J							

KNHXHJ Series

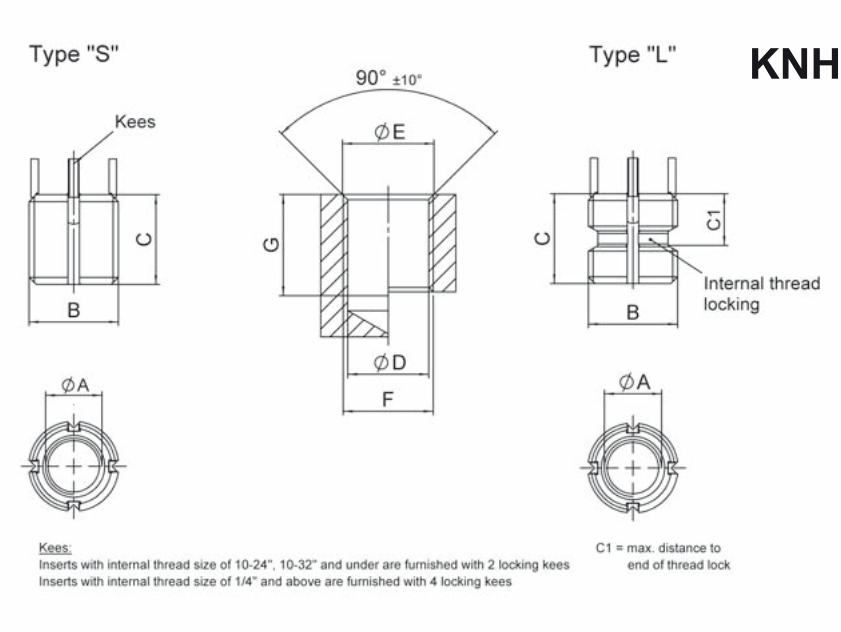

Part-no.		Dimensions				
Standard type "S"	Locking type "L"	Thread A Ø A class 3B	Thread B Ø B class 2A mod.	Shear engagement inch² (mm²)	C inch (mm)	C1 inch (mm)
KNHXH518J		5/16-18	9/16-12	0,4163 (268,6)	0,43 (10,9)	
	KNHXHL518J			0,3029 (195,4)		0,37 (9,40)
KNHXH624J		3/8-24	5/8-11	0,5584 (360,3)	0,50 (12,7)	
	KNHXHL624J			0,4234 (273,8)		0,37 (9,40)
KNHXH616J		3/8-16	5/8-11	0,5584 (360,3)	0,50 (12,7)	
	KNHXHL616J			0,4234 (273,8)		0,41 (10,41)
KNHXH720J		7/16-20	11/16-11 NS	0,8000 (516,1)	0,62 (15,6)	
	KNHXHL720J			0,6498 (419,2)		0,42 (10,67)
KNHXH714J		7/16-14	11/16-11 NS	0,8000 (516,1)	0,62 (15,6)	
	KNHXHL714J			0,6498 (419,2)		0,46 (11,68)

Part-no.	Installation dimensions					Removal dimensions	
	Ø D modified tap drill Ø inch	Ø E countersink Ø inch +0,01 (mm)	Thread F		Hand installation tool part-no.	Drill	
			Ø F class UNC- 2B	G min. inch (mm)		Ø inch (mm)	Depth inch (mm)
KNHXH518J KNHXHL518J	0,516 (13,11)	0,572 (14,53)	9/16-12	0,50 (12,70)	THXHD518L	15/32 (11,91)	3/16 (4,76)
KNHXH624J KNHXHL624J	0,578 (14,68)	0,635 (16,13)	5/8-11	0,56 (14,22)	THXHD624L	17/32 (13,49)	3/16 (4,76)
KNHXH616J KNHXHL616J	0,578 (14,68)	0,635 (16,13)	5/8-11	0,56 (14,22)	THXHD616L	17/32 (13,49)	3/16 (4,76)
KNHXH720J KNHXHL720J	0,641 (16,28)	0,700 (17,80)	11/16-11 NS	0,68 (17,27)	THXHD720L	19/32 (15,08)	3/16 (4,76)
KNHXH714J KNHXHL714J	0,641 (16,28)	0,700 (17,80)	11/16-11 NS	0,68 (17,27)	THXHD714L	19/32 (15,08)	3/16 (4,76)

KNHXHJ Series

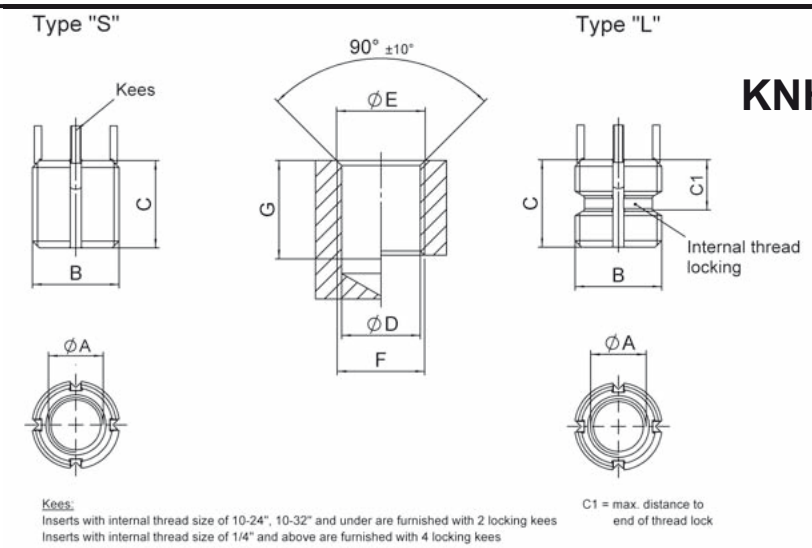

Part-no.		Dimensions				
Standard type "S"	Locking type "L"	Thread A Ø A class 3B	Thread B Ø B class 2A mod.	Shear engagement inch² (mm²)	C inch (mm)	C1 inch (mm)
KNHXH820J		1/2-20	13/16-16	1,0293 (664,1)	0,68 (17,3)	
	KNHXHL820J			0,8642 (557,6)		0,42 (10,67)
KNHXH813J		1/2-13	13/16-16	1,0293 (664,1)	0,68 (17,3)	
	KNHXHL813J			0,8642 (557,6)		0,47 (11,94)
KNHXH918J		9/16-18	7/8-14	1,3761 (887,8)	0,81 (20,6)	
	KNHXHL918J			1,1131 (718,1)		0,48 (12,19)
KNHXH912J		9/16-12	7/8-14	1,3761 (887,8)	0,81 (20,6)	
	KNHXHL912J			1,1131 (718,1)		0,54 (13,72)
KNHXH1018J		5/8-18	1-12	1,6420 (1059,4)	0,87 (22,1)	
	KNHXHL1018J			1,2770 (823,9)		0,51 (12,95)
KNHXH1011J		5/8-11	1-12	1,6420 (1059,4)	0,87 (22,1)	
	KNHXHL1011J			1,2770 (823,9)		0,59 (14,99)

Part-no.	Installation dimensions					Removal dimensions	
	Ø D modified tap drill Ø inch	Ø E countersink Ø inch +0,01 (mm)	Thread F		Hand installation tool part-no.	Drill	
			Ø F class UNC-2B	G min. inch (mm)		Ø inch (mm)	Depth inch (mm)
KNHXH820J	0,766 (19,46)	0,822 (20,88)	13/16-16 UNF	0,75 (19,05)	THXHD820L	23/32 (18,26)	3/16 (4,76)
KNHXHL820J							
KNHXH813J	0,766 (19,46)	0,822 (20,88)	13/16-16 UNF	0,75 (19,05)	THXHD813L	23/32 (18,26)	3/16 (4,76)
KNHXHL813J							
KNHXH918J	0,828 (21,03)	0,885 (22,48)	7/8-14 UNF	0,94 (23,88)	THXHD918L	25/32 (19,84)	3/16 (4,76)
KNHXHL918J							
KNHXH912J	0,828 (21,03)	0,885 (22,48)	7/8-14 UNF	0,94 (23,88)	THXHD912L	25/32 (19,84)	3/16 (4,76)
KNHXHL912J							
KNHXH1018J	0,937 (23,80)	1,020 (25,91)	1-12 UNF	1,00 (25,40)	THXHD1018L	27/32 (21,43)	5/16 (7,94)
KNHXHL1018J							
KNHXH1011J	0,937 (23,80)	1,020 (25,91)	1-12 UNF	1,00 (25,40)	THXHD1011L	27/32 (21,43)	5/16 (7,94)
KNHXHL1011J							

KNHXHJ Series

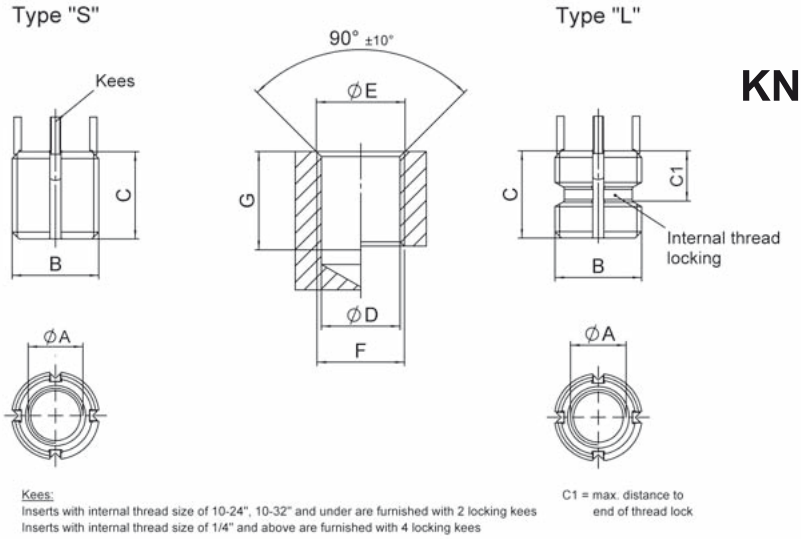

Kees:
Inserts with internal thread size of 10-24", 10-32" and under are furnished with 2 locking kees
Inserts with internal thread size of 1/4" and above are furnished with 4 locking kees

C1 = max. distance to end of thread lock

Part-no.		Dimensions				
Standard type "S"	Locking type "L"	Thread A Ø A class 3B	Thread B Ø B class 2A mod.	Shear engagement inch² (mm²)	C inch (mm)	C1 inch (mm)
KNHXH1216J		3/4-16	1-1/4-12	2,7966 (1804,2)	1,12 (28,5) 1,25 (31,8)	
	KNHXHL1216J			2,5505 (1645,5)		0,57 (14,48)
KNHXH1210J		3/4-10	1-1/4-12	2,7966 (1804,2)	1,12 (28,5) 1,25 (31,8)	
	KNHXHL1210J			2,5505 (1645,5)		0,64 (16,26)
KNHXH1414J		7/8-14	1-3/8-12	3,4652 (2235,6)	1,25 (31,8) 1,37 (34,8)	
	KNHXHL1414J			3,2769 (2114,1)		0,63 (16,00)
KNHXH1409J		7/8-9	1-3/8-12	3,4652 (2235,6)	1,25 (31,8) 1,37 (34,8)	
	KNHXHL1409J			3,2769 (2114,1)		0,71 (18,03)
KNHXH1612J		1-12	1-1/2-12	4,2374 (2733,8)	1,37 (34,8) 1,50 (38,1)	
	KNHXHL1612J			4,2135 (2718,4)		0,70 (17,78)
KNHXH1608J		1-8	1-1/2-12	4,2374 (2733,8)	1,37 (34,8) 1,50 (38,1)	
	KNHXHL1608J			4,2135 (2718,4)		0,78 (19,81)

Part-no.	Installation dimensions					Removal dimensions	
	Ø D modified tap drill Ø inch	Ø E countersink Ø inch +0,01 (mm)	Thread F		Hand installation tool part-no.	Drill	
			Ø F class UNC-2B	G min. inch (mm)		Ø inch (mm)	Depth inch (mm)
KNHXH1216J	1,187 (30,15)	1,270 (32,26)	1-1/4-12 UNF	1,31 (33,27) 1,44 (36,58)	THXHD1216L	1-3/32 (27,78)	5/16 (7,94)
KNHXHL1216J							
KNHXH1210J	1,187 (30,15)	1,270 (32,26)	1-1/4-12 UNF	1,31 (33,27) 1,44 (36,58)	THXHD1210L	1-3/32 (27,78)	5/16 (7,94)
KNHXHL1210J							
KNHXH1414J	1,312 (33,32)	1,395 (35,43)	1-3/8-12 UNF	1,44 (36,58) 1,56 (39,62)	THXHD1414L	1-7/32 (30,96)	5/16 (7,94)
KNHXHL1414J							
KNHXH1409J	1,312 (33,32)	1,395 (35,43)	1-3/8-12 UNF	1,44 (36,58) 1,56 (39,62)	THXHD1409L	1-7/32 (30,96)	5/16 (7,94)
KNHXHL1409J							
KNHXH11612J	1,437 (36,50)	1,520 (38,61)	1-1/2-12 UNF	1,56 (39,62) 1.38 (42,67)	THXHD1612L	1-11/32 (34,13)	5/16 (7,94)
KNHXHL1612J							
KNHXH1608J	1,437 (36,50)	1,520 (38,61)	1-1/2-12 UNF	1,56 (39,62) 1.38 (42,67)	THXHD1608L	1-11/32 (34,13)	5/16 (7,94)
KNHXHL1608J							

TÜVRheinland ZERTIFIZIERT
Management System
ISO 9001:2015
ISO 14001:2015
www.tuv.com
ID 9108624624

Further materials and surface finishes on demand. We will be pleased to give you advice.
Phone: +49 (0) 231 / 725 790 -0
Fax: +49 (0) 231 / 725 790 -10
eMail: info@hokon-verschlusstechnik.de
Homepage: www.hokon-verschlusstechnik.de

Recoil

threaded inserts and tools









FOLDER 6 **THREAD INSERTS**

FOLDER 1 **LATCHES**

FOLDER 2 **TENSION BANDS**

FOLDER 3 **HANDLE**

FOLDER 4 **HINGES**

FOLDER 5 **LOCKING DEVICES AND CATCHES**

FOLDER 6 **THREAD INSERTS**

KEENSERTS .....

RECOIL ..... **R**

INTRODUCTION R-5

METRIC THREAD INSERTS .....

- COARSE PITCH THREAD „FREE RUNNING“ R-9
- COARSE PITCH THREAD „LOCKING“ R-12
- FINE THREAD „FREE RUNNING“ R-15
- FINE THREAD „LOCKING“ R-18

INCH THREAD INSERTS „AMERICAN“ .....

- STANDARD COARSE THREAD (UNC) R-20
- STANDARD FINE THREAD (UNF) R-23
- COARSE THREAD „LOCKING“ (UNC) R-26
- FINE THREAD „LOCKING“ (UNF) R-29
- STANDARD THREAD (NPT)/ SPECIAL SIZE R-32

INCH THREAD INSERTS „BRITISH“ .....

- STANDARD COARSE THREAD (BSW/ WITHWORTH- GEWINDE) R-33
- STANDARD FINE THREAD (BSF) R-35

TÜVRheinland ZERTIFIZIERT Management System ISO 9001:2015 ISO 14001:2015 www.tuv.com ID 9108624624

Further materials and surface finishes on demand. We will be pleased to give you advice.
Phone: +49 (0) 231 / 725 790 -0 eMail: info@hokon-verschlusstechnik.de
Fax: +49 (0) 231 / 725 790 -10 Homepage: www.hokon-verschlusstechnik.de

„Recoil“
Inserts, tools and repair-kits

- STANDARD THREAD (BA) R-36
- STANDARD THREAD (BSC)/ STANDARD THREAD (8 TPI/ UN) R-37
- STANDARD PIPE THREAD (BSP)/ SPECIAL SIZE R-38

REPAIR- KITS .....

- METRIC (-STANDARD,- FINE,- X-FINE) R-39
- INCH (BSF, BSW, BSC/BRASS, BA, BSP, UNC, UNF, NPT, 8TPI UN, SPECIAL SIZE) R-41

COMBI REPAIR- KITS .....

- METRIC/ INCH R-47
- MINI COMBI- KITS (METRIC, INCH, BICYCLE TREADLE REP.-KIT) R-48

REFILL PACKAGES „METRIC“ .....

- STANDARD R-49
- FINE, X-FINE R-50

REFILL PACKAGES „INCH-BRITISH“ .....

- BSF, BSW R-51
- BSC/ BRASS, BA, BSP R-52

REFILL PACKAGES „INCH-AMERICAN“ .....

- UNC R-53
- UNF R-54
- NPT, SPECIAL SIZE R-55

THREAD INSERTS „TAPED- METRIC“ .....

- STANDARD R-56
- „LOCKING“ R-57

THREAD INSERTS „TAPED- INCH“ .....

- STANDARD (UNC) R-58
- STANDARD (UNF) R-59
- „LOCKING“ (UNC) R-60
- „LOCKING“ (UNF) R-61

Phone: +49 (0) 231 / 725 790 -0 eMail: info@hokon-verschlusstechnik.de
Fax: +49 (0) 231 / 725 790 -10 Homepage: www.hokon-verschlusstechnik.de

„Recoil“
Inserts, tools and repair-kits

Introduction

The Recoil system are used for repairing damaged screw threads or creating strong new threads.

- A superior thread with great holding power
- Most cost effective method of repair
- Returns thread to the original size
- Generally stronger than the original female thread

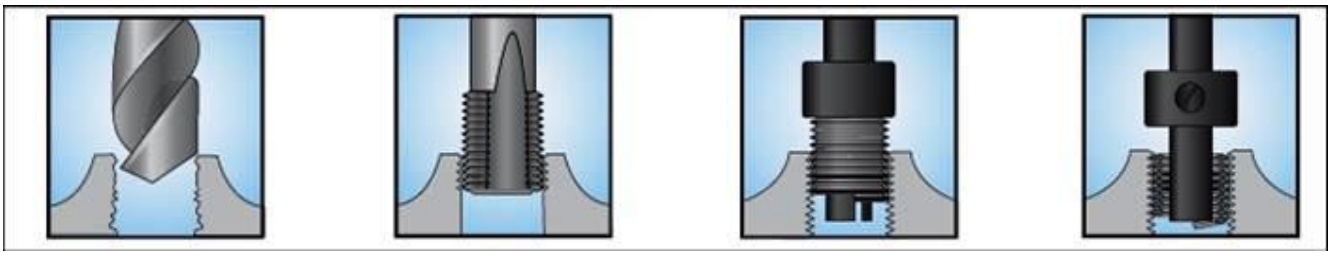

Reinforcement of thread

This improved strength allows to select a fastener based on the minimum strength of the bolt, smaller diameters and shorter thread lengths confidently even in low strength materials such as magnesium or aluminium alloys.

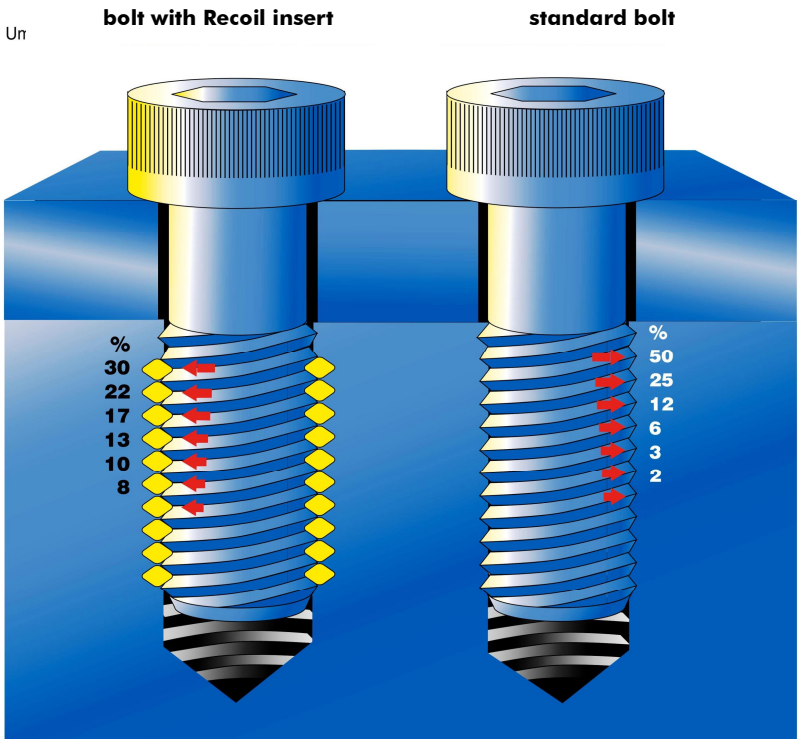

TÜVRheinland ZERTIFIZIERT
Management System
ISO 9001:2015
ISO 14001:2015
www.tuv.com ID 9108624624

Further materials and surface finishes on demand. We will be pleased to give you advice.
Phone: +49 (0) 231 / 725 790 -0
Fax: +49 (0) 231 / 725 790 -10
eMail: info@hokon-verschlusstechnik.de
Homepage: www.hokon-verschlusstechnik.de

„Recoil“
Inserts, tools and repair-kits

Pitch and Angle error compensation

Problems

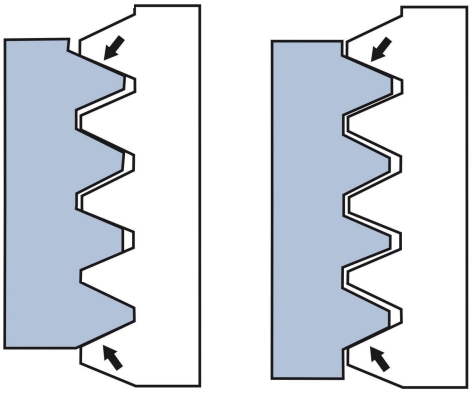

angle error **pitch error**

Solution

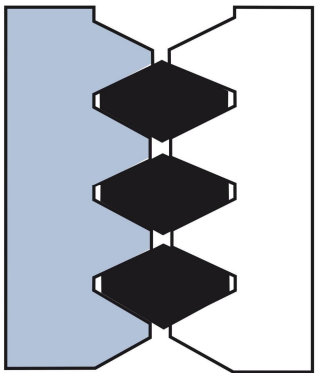

Recoil compensation effect

Typical thread and angle errors may cause:

- limited contact point
- poor flank contact between bolt to parent thread
- unequal distribution of bolt load over engaged threads
- failure of threaded components when loaded

Recoil-inserts reduce thread pitch - and angle errors to provide:

- greater fastener strength
- greater contact area
- equally distributed load over all tapped threads
- reduced stress concentration thereby extending fatigue life

Types of inserts

Uninstalled, Recoil inserts are greater in diameter than the tapped hole. During the assembly operation the diameter of the leading coils is reduced thereby permitting entry of the insert into the tapped hole.
When the insert is installed at the correct depth, the coils expand and permanently retains the insert in place.

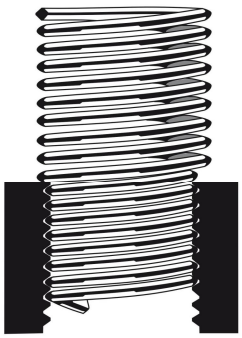

Recoil insert in „Semi installed“ position

- **„free running“** inserts
provide a standard female thread.

- **„„locking“** inserts
After the installation of the fastener result a clamp effect to the bolt.
For differentiation these are pigmented in **red**.

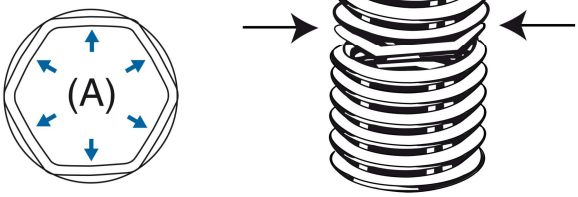

„Recoil“
Inserts, tools and repair-kits

„Locking“ insert torque values
locking torque values for unified conform to NASM8846

Metric coarse series

Nominal thread size	Locking torque Max	Min
M2.2 x 0.45	0.14 Nm	0.02 Nm
M2.5 x 0.45	0.23 Nm	0.05 Nm
M3 x 0.5	0.45 Nm	0.1 Nm
M3.5 x 0.6	0.68 Nm	0.12 Nm
M4 x 0.7	0.9 Nm	0.15 Nm
M5 x 0.8	1.6 Nm	0.3 Nm
M6 x1	3 Nm	0.4 Nm
M7 x 1	4.5 Nm	0.6 Nm
M8 x 1.25	6 Nm	0.8 Nm
M10 x 1.5	10.5 Nm	1.4 Nm
M12 x 1.75	15.5 Nm	2.1Nm
M14 x 2	23.5 Nm	3 Nm
M16 x 2	31.5 Nm	4.2 Nm
M18 x 2.5	42 Nm	5.5 Nm
M20 x 2.5	54 Nm	7 Nm
M22 x 2.5	67.5 Nm	9 Nm
M24 x 3	80 Nm	10.5 Nm
M27 x 3	94 Nm	12 Nm
M30 x 3.5	108 Nm	14 Nm
M33 x 3.5	122 Nm	15.5 Nm
M36 x 4	136 Nm	17.5 Nm
M39 x 4	150 Nm	19.5 Nm

Metric fine series

Nominal thread size	Locking torque Max	Min
M8 x 1	6 Nm	0.8 Nm
M10 x 1	10.5 Nm	1.4 Nm
M10 x 1.25	10.5 Nm	1.4 Nm
M12 x 1.25	15.5 Nm	2.1 Nm
M12 x 1.5	15.5 Nm	2.1 Nm
M14 x 1.5	23.5 Nm	3 Nm
M16 x 1.5	31.5 Nm	4.2 Nm
M18 x 1.5	42 Nm	5.5 Nm
M20 x 1.5	54 Nm	7 Nm
M22 x 1.5	67.5 Nm	9 Nm
M18 x 2	42 Nm	5.5 Nm
M20 x 2	54 Nm	7 Nm
M22 x 2	67.5 Nm	9 Nm
M24 x 2	80 Nm	10.5 Nm
M27 x 2	94 Nm	12 Nm
M30 x 2	108 Nm	14 Nm
M33 x 2	122 Nm	15.5 Nm
M36 x 2	136 Nm	17.5 Nm
M39 x 2	150 Nm	19.5 Nm
M36 x 3	136 Nm	17.5 Nm
M39 x 3	150 Nm	19.5 Nm

Unified coarse (UNC)

Nominal thread size	Locking torque Max	Min
2 (.086") - 56	20 oz.in	3 oz.in
3 (.099") - 40	32 oz.in	7 oz.in
4 (112") - 40	48 ozin	10 oz.in
5 (.125") - 40	75 oz.in	13 oz.in
6 (.138") - 32	6 lb.in	1.0 lb.in
8 (.164") - 32	9 lb.in	1.5 lb.in
10 (.190") - 24	13 lb.in	2.0 lb.in
12 (.216) - 24	24 lb.in	3.0 lb.in
1/4 (.250") - 20	30 lb.in	4.5 lb.in
5/16 (.3125") -18	60 lb.in	7.5 lb.in
3/8 (.3750") - 18	80 lb.in	12.0 lb.in
7/16 (.4375") - 14	100 lb.in	16.5 lb.in
1/2 (.5000") - 13	150 lb.in	24.0 lb.in
9/16 (.5625") - 12	200 lb.in	30.0 lb.in
5/8 (.6250") - 11	300 lb.in	40.0 lb.in
3/4 (.7500") - 10	400 lb.in	60.0 lb.in
7/8 (.8750") - 9	600 lb.in	82.0 lb.in
1 (1.000") - 8	800 lb.in	110.0 lb.in
1 1/8 (1.1250") - 7	900 lb.in	137.0 lb.in
1 1/4 (1.1250") -7	1000 lb.in	165.0 lb.in
1 3/8 (1.3750") - 6	1150 lb.in	185.0 lb.in
1 1/2 (1.5000) - 6	1350 lb.in	210.0 lb.in

Unified fine (UNF)

Nominal thread size	Locking torque Max	Min
3 (.099) - 56	32 oz.in	7oz.in
4 (.112) - 48	48 oz.in	10 oz.in
6 (.138) - 40	6 lb.in	1.0 lb.in
8 (.164) - 36	9 lb.in	1.5 lb.in
10 (.190) - 32	13lb.in	2.0 lb.in
1/4 (.2500) - 28	30 lb.in	3.5 lb.in
5/16 (.3125) - 24	60 lb.in	6.5 lb.in
3/8 (.3750) - 24	80 lb.in	9.5 lb.in
7/16 (.4375) -20	100 lb.in	14.0 lb.in
1/2 (.5000) - 20	150 lb.in	18.0 lb.in
9/16 (.5625) - 18	200 lb.in	24.0 lb.in
5/8 (.6250) - 18	300 lb.in	32.0 lb.in
3/4 (.7500) - 16	400 lb.in	50.0 lb.in
7/8 (.8750) - 14	600 lb.in	70.0 lb.in
1 (1.0000) - 12	800 lb.in	90.0 lb.in
1 1/8 (1.1250) - 12	900 lb.in	117.0 lb.in
1 1/4 (1.2500) - 12	1000 lb.in	143.0 lb.in
1 3/8 (1.3750) - 12	1150 lb.in	165.0 lb.in
1 1/2 (1.5000) -12	1350 lb.in	190.0 lb.in

TÜVRheinland ZERTIFIZIERT
Management System ISO 9001:2015 ISO 14001:2015
www.tuv.com ID 9108624624

Further materials and surface finishes on demand. We will be pleased to give you advice.
Phone: +49 (0) 231 / 725 790 -0 eMail: info@hokon-verschlusstechnik.de
Fax: +49 (0) 231 / 725 790 -10 Homepage: www.hokon-verschlusstechnik.de

„Recoil“
Inserts, tools and repair-kits

Recoil wire thread insert finishes and coatings

Plating/ finish	Part number suffix	Applicable process specification
Silver plating	AG	QQS-365 or AMS2411 or EN2786
Cadmium plating	C	QQP-416 or DEF STD 03-19
Dry film lubricant	D	MIL-L-8937 or MIL-L-46010
Red dye	not applicalbe	applied to all Recoil locking inserts for identification where called for by specification

Material type	Max. temperature peak	Max. temperature continuous	Typical applications	Coatings (see section on lubricants)
Stainless1.4301	425°C	315°C	most general applications in all materials	non-finish dry film lubrcant
Stainless1.4571	425°C	315°C	improved corrosion resistance salt water applications	silver cadmium
Phosphor bronze	300°C	235°C	copper parts non magnetic/ low permeability applications	cadmium silver
Inconel x 750	650°C	550°C	aerospace/ turbines/ corrosive atmospheres/ high tempera-ture use	silver copper
Nimonic alloy 90	650°C	550°C	aerospace/ turbine applications	silver

„Recoil“

Inserts, tools and repair-kits

Metric coarse thread

Wire thread inserts „free running“

Tap set content:

- taper, intermediate and bottoming



Thread inner- Ø	Art. no.	Length		Core- Ø	Outside- Ø	Screw- tap
		D	mm	spiral tap Ø in mm	in mm	art. no.
M2 x 0,4	05022	1D	2,0	2,10	-	45024
	05023	1,5D	3,0			45025
	05024	2D	4,0			45026
	05025	2,5D	5,0			
	05026	3D	6,0			
M2.2 x 0,4	05012	1D	2,2	2,30	-	45014
	05013	1,5D	3,3			45015
	05014	2D	4,4			45016
	05015	2,5D	5,5			
	05016	3D	6,6			
M2.5 x 0,45	05252	1D	2,5	2,60	3,08	45254
	05253	1,5D	3,8			45255
	05254	2D	5,0			45256
	05255	2,5D	6,3			
	05256	3D	7,5			
M3 x 0,5	05032	1D	3,0	3,10	3,65	45034
	05033	1,5D	4,5			45035
	05034	2D	6,0			45036
	05035	2,5D	7,5			
	05036	3D	9,0			
M3.5 x 0,6	05352	1D	3,5	3,60	4,28	45354
	05353	1,5D	5,3			45355
	05354	2D	7,0			45356
	05355	2,5D	8,8			
	05356	3D	10,5			
M4 x 0,7	05042	1D	4,0	4,10	4,91	45044
	05043	1,5D	6,0			45045
	05044	2D	8,0			45046
	05045	2,5D	10,0			
	05046	3D	12,0			
M5 x 0,8	05052	1D	5,0	5,20	6,04	45054
	05053	1,5D	7,5			45055
	05054	2D	10,0			45056
	05055	2,5D	12,5			
	05056	3D	15,0			
M6 x 1,0	05062	1D	6,0	6,20	7,30	45064
	05063	1,5D	9,0			45065
	05064	2D	12,0			45066
	05065	2,5D	15,0			
	05066	3D	18,0			
M7 x 1,0	05072	1D	7,0	7,20	8,30	45074
	05073	1,5D	10,5			45075
	05074	2D	14,0			45076
	05075	2,5D	17,5			
	05076	3D	21,0			
M8 x 1,25	05082	1D	8,0	8,20		45084
	05083	1,5D	12,0			45085
	05084	2D	16,0			45086
	05085	2,5D	20,0			
	05086	3D	24,0			

TÜVRheinland ZERTIFIZIERT
Management System ISO 9001:2015 ISO 14001:2015
www.tuv.com ID 9108624624

Further materials and surface finishes on demand. We will be pleased to give you advice.
Phone: +49 (0) 231 / 725 790 -0 eMail: info@hokon-verschlusstechnik.de
Fax: +49 (0) 231 / 725 790 -10 Homepage: www.hokon-verschlusstechnik.de

„Recoil“
Inserts, tools and repair-kits

Metric coarse thread

Wire thread inserts **„free running“**
Tap set content:

- taper, intermediate and bottoming



Thread inner- Ø	Art. no.	Length		Core- Ø	Outside- Ø	Screw- tap
		D	mm	spiral tap Ø in mm	in mm	art. no.
M9 x 1.25	**05092**	1D	9,0	9,30	10,62	45094 45095 45096
	05093	1,5D	13,5			
	05094	2D	18,0			
	05095	2,5D	22,5			
	05096	3D	27,0			
M10 x 1.5	**05102**	1D	10,0	10,30	11,95	45104 45105 45106
	05103	1,5D	15,0			
	05104	2D	20,0			
	05105	2,5D	25,0			
	05106	3D	30,0			
M11 x 1.5	**05112**	1D	11,0	11,30	12,95	45114 45115 45116
	05113	1,5D	16,5			
	05114	2D	22,0			
	05115	2,5D	27,5			
	05116	3D	33,0			
M12 x 1.75	**05122**	1D	12,0	12,40	14,27	45124 45125 45126
	05123	1,5D	18,0			
	05124	2D	24,0			
	05125	2,5D	30,0			
	05126	3D	36,0			
M14 x 2,0	**05142**	1D	14,0	14,40	16,60	45144 45145 45146
	05143	1,5D	21,0			
	05144	2D	28,0			
	05145	2,5D	35,0			
	05146	3D	42,0			
M15 x 2,0	**05152**	1D	15,0	15,50	17,60	45154 45155 45156
	05153	1,5D	22,5			
	05154	2D	30,0			
	05155	2,5D	37,5			
	05156	3D	45,0			
M16 x 2,0	**05162**	1D	16,0	16,50	18,60	45164 45165 45166
	05163	1,5D	24,0			
	05164	2D	32,0			
	05165	2,5D	40,0			
	05166	3D	48,0			
M18 x 2.5	**05182**	1D	18,0	18,50	21,25	45184 45185 45186
	05183	1,5D	27,0			
	05184	2D	36,0			
	05185	2,5D	45,0			
	05186	3D	54,0			
M20 x 2.5	**05202**	1D	20,0	20,50	23,25	45204 45205 45206
	05203	1,5D	30,0			
	05204	2D	40,0			
	05205	2,5D	50,0			
	05206	3D	60,0			
M22 x 2.5	**05222**	1D	22,0	22,50	25,25	45224 45225 45226
	05223	1,5D	33,0			
	05224	2D	44,0			
	05225	2,5D	55,0			
	05226	3D	66,0			

„Recoil“
Inserts, tools and repair-kits

Metric coarse thread

Wire thread inserts **„free running“**
Tap set content:

- taper, intermediate and bottoming



Thread inner- Ø	Art. no.	Length		Core- Ø	Outside- Ø	Screw- tap
		D	mm	spiral tap Ø in mm	in mm	art. no.
M24 x 3,0	**05242**	1D	24,0	24,80	27,90	45244
	05243	1,5D	36,0			45245
	05244	2D	48,0			45246
	05245	2,5D	60,0			
	05246	3D	72,0			
M27 x 3,0	**05272**	1D	27,0	27,50	30,90	45274
	05273	1,5D	40,5			45275
	05274	2D	54,0			45276
	05275	2,5D	67,5			
	02756	3D	81,0			
M30 x 3.5	**05302**	1D	30,0	30,50	34,55	45304
	05303	1,5D	45,0			45305
	05304	2D	60,0			45306
	05305	2,5D	75,0			
	05306	3D	90,0			
M30 x 3,0	**05202-3**	1D	30,0	-	-	45304-3
	05203-3	1,5D	45,0			45305-3
	05204-3	2D	60,0			45306-3
	05205-3	2,5D	75,0			
	05206-3	3D	90,0			
M36 x 4,0	**05362**	1D	36,0	36,50	41,20	45364
	05363	1,5D	54,0			45365
	05364	2D	72,0			45366
	05365	2,5D	90,0			
	05366	3D	108,0			
M39 x 4,0	**05392**	1D	39,0	39,50	44,20	45394
	05393	1,5D	58,5			45395
	05394	2D	78,0			45396
	05395	2,5D	97,5			
	05396	3D	117,0			
M42 x 4.5	**05422**	1D	42,0	43,00	47,85	45424
	05423	1,5D	63,0			45425
	05424	2D	84,0			45426
M42 x 4,0	**05422-4**	1D	42,0	43,00-	-	45424-4
	05423-4	1,5D	63,0			45425-4
	05424-4	2D	84,0			45426-4

TÜVRheinland ZERTIFIZIERT Management System ISO 9001:2015 ISO 14001:2015 www.tuv.com ID 9108624624

Further materials and surface finishes on demand. We will be pleased to give you advice.
Phone: +49 (0) 231 / 725 790 -0 eMail: info@hokon-verschlusstechnik.de
Fax: +49 (0) 231 / 725 790 -10 Homepage: www.hokon-verschlusstechnik.de

„Recoil“
Inserts, tools and repair-kits

Metric coarse thread

Wire thread inserts **„locking“**
Tap set content:

- taper, intermediate and bottoming



Thread inner- Ø	Art. no.	Length		Core- Ø	Outside- Ø	Screw- tap
		D	mm	spiral tap Ø in mm	in mm	art. no.
M2 x 0,4	**15022**	1D	2,0	2,10	-	45024
	15023	1,5D	3,0			45025
	15024	2D	4,0			45026
	15025	2,5D	5,0			
	15026	3D	6,0			
M2,2 -0,4	**15012**	1D	2,2	2,30	-	45014
	15013	1,5D	3,3			45015
	15014	2D	4,4			45016
	15015	2,5D	5,5			
	15016	3D	6,6			
M2,5 x 0,45	**15252**	1D	2,5	2,60	3,08	45254
	15253	1,5D	3,8			45255
	15254	2D	5,0			45256
	15255	2,5D	6,3			
	15256	3D	7,5			
M3 x 0,5	**15032**	1D	3,0	3,10	3,65	45034
	15033	1,5D	4,5			45035
	15034	2D	6,0			45036
	15035	2,5D	7,5			
	15036	3D	9,0			
M3,5 x 0,6	**15352**	1D	3,5	3,60	4,28	45354
	15353	1,5D	5,3			45355
	15354	2D	7,0			45356
	15355	2,5D	8,8			
	15356	3D	10,5			
M4 x 0,7	**15042**	1D	4,0	4,10	4,91	45044
	15043	1,5D	6,0			45045
	15044	2D	8,0			45046
	15045	2,5D	10,0			
	15046	3D	12,0			
M5 x 0,8	**15052**	1D	5,0	5,20	6,04	45054
	15053	1,5D	7,5			45055
	15054	2D	10,0			45056
	15055	2,5D	12,5			
	15056	3D	15,0			

„Recoil“
Inserts, tools and repair-kits

Metric coarse thread

Wire thread inserts **„locking“**
Tap set content:

- taper, intermediate and bottoming



Thread inner- Ø	Art. no.	Length		Core- Ø	Outside- Ø	Screw- tap
		D	mm	spiral tap Ø in mm	in mm	art. no.
M6 x 1,0	**15062**	1D	6,0	6,20	7,30	45064 45065 45066
	15063	1,5D	9,0			
	15064	2D	12,0			
	15065	2,5D	15,0			
	15066	3D	18,0			
M7 x 1,0	**15072**	1D	7,0	7,20	8,30	45074 45075 45076
	15073	1,5D	10,5			
	15074	2D	14,0			
	15075	2,5D	17,5			
	15076	3D	21,0			
M8 x 1,25	**15082**	1D	8,0	8,30	9,62	45084 45085 45086
	15083	1,5D	12,0			
	15084	2D	16,0			
	15085	2,5D	20,0			
	15086	3D	24,0			
M10 x 1,5	**15102**	1D	10,0	10,30	11,95	45104 45105 45106
	15103	1,5D	15,0			
	15104	2D	20,0			
	15105	2,5D	25,0			
	15106	3D	30,0			
M12 x 1,75	**15122**	1D	12,0	12,40	14,27	45124 45125 45126
	15123	1,5D	18,0			
	15124	2D	24,0			
	15125	2,5D	30,0			
	15126	3D	36,0			
M14 x 2,0	**15142**	1D	14,0	14,40	16,60	45144 45145 45146
	15143	1,5D	21,0			
	15144	2D	28,0			
	15145	2,5D	35,0			
	15146	3D	42,0			
M16 x 2,0	**15162**	1D	16,0	16,50	18,60	45164 45165 45166
	15163	1,5D	24,0			
	15164	2D	32,0			
	15165	2,5D	40,0			
	15166	3D	48,0			
M18 x 2,5	**15182**	1D	18,0	18,50	21,25	45184 45185 45186
	15183	1,5D	27,0			
	15184	2D	36,0			
	15185	2,5D	45,0			
	15186	3D	54,0			
M20 x 2,5	**15202**	1D	20,0	20,50	23,25	45204 45205 45206
	15203	1,5D	30,0			
	15204	2D	40,0			
	15205	2,5D	50,0			
	15206	3D	60,0			

TÜVRheinland ZERTIFIZIERT Management System ISO 9001:2015 ISO 14001:2015 www.tuv.com ID 9108624624

Further materials and surface finishes on demand. We will be pleased to give you advice.
Phone: +49 (0) 231 / 725 790 -0 eMail: info@hokon-verschlusstechnik.de
Fax: +49 (0) 231 / 725 790 -10 Homepage: www.hokon-verschlusstechnik.de

„Recoil“
Inserts, tools and repair-kits

Metric coarse thread

Wire thread inserts **„locking“**
Tap set content:

- taper, intermediate and bottoming



Thread inner- Ø	Art. no.	Length		Core- Ø	Outside- Ø	Screw- tap
		D	mm	spiral tap Ø in mm	in mm	art. no.
M22 x 2,5	**15222**	1D	22,0	22,50	25,25	45224 45225 45226
	15223	1,5D	33,0			
	15224	2D	44,0			
	15225	2,5D	55,0			
	15226	3D	66,0			
M24 x 3,0	**15242**	1D	24,0	24,80	27,90	45244 45245 45246
	15243	1,5D	36,0			
	15244	2D	48,0			
	15245	2,5D	60,0			
	15246	3D	72,0			
M27 x 3,0	**15272**	1D	27,0	27,50	30,90	45274 45275 45276
	15273	1,5D	40,5			
	15274	2D	54,0			
	15275	2,5D	67,5			
	15276	3D	81,0			
M30 x 3,5	**15302**	1D	30,0	30,50	34,55	45304 45305 45306
	15303	1,5D	45,0			
	15304	2D	60,0			
	15305	2,5D	75,0			
	15306	3D	90,0			
M30 x 3,0	**15302-3**	1D	30,0	-	-	45304-3 45305-3 45306-3
	15303-3	1,5D	45,0			
	15304-3	2D	60,0			
	15305-3	2,5D	75,0			
	15306-3	3D	90,0			
M36 x 4,0	**15362**	1D	36,0	36,50	41,20	45364 45365 45366
	15363	1,5D	54,0			
	15364	2D	72,0			
	15365	2,5D	90,0			
	15366	3D	108,0			
M39 x 4,0	**15392**	1D	39,0	39,50	44,20	45394 45395 45396
	15393	1,5D	58,5			
	15394	2D	78,0			

„Recoil“
Inserts, tools and repair-kits

Metric coarse thread

Wire thread inserts**„free running“**
Tap set content:

- taper, intermediate and bottoming

Thread inner- Ø	Art. no.	Length		Core- Ø	Outside- Ø	Screw- tap
		D	mm	spiral tap Ø in mm	in mm	art. no.
M8 x 1,0	**07082**	1D	8,0	8,30	9,30	47084 47085 47086
	07083	1,5D	12,0			
	07084	2D	16,0			
	07085	2,5D	20,0			
	07086	3D	24,0			
M9 x 1,0	**07092**	1D	9,0	9,30	10,30	47094 47095 47096
	07093	1,5D	13,5			
	07094	2D	18,0			
	07095	2,5D	22,5			
	07096	3D	27,0			
M10 x 1.25	**07102**	1D	10,0	10,30	11,62	47104 47105 47106
	07103	1,5D	15,0			
	07104	2D	20,0			
	07105	2,5D	25,0			
	07106	3D	30,0			
M10 x 1,0	**08102**	1D	10,0	10,30	11,30	48104 48105 48106
	08103	1,5D	15,0			
	08104	2D	20,0			
	08105	2,5D	25,0			
	08106	3D	30,0			
M11 x 1.25	**07112**	1D	11,0	-	-	47114 47115 47116
	07113	1,5D	16,5			
	07114	2D	22,0			
	07115	2,5D	27,5			
	07116	3D	33,0			
M11 x 1,0	**08112**	1D	11,0	11,30	12,30	48114 48115 48116
	08113	1,5D	16,5			
	08114	2D	22,0			
	08115	2,5D	27,5			
	08116	3D	33,0			
M12 x 1.5	**07122**	1D	12,0	12,50	13,95	47124 47125 47126
	07123	1,5D	18,0			
	07124	2D	24,0			
	07125	2,5D	30,0			
	07126	3D	36,0			
M12 x 1.25	**08122**	1D	12,0	12,30	13,62	48124 48125 48126
	08123	1,5D	18,0			
	08124	2D	24,0			
	08125	2,5D	30,0			
	08126	3D	36,0			
M14 x 1.5	**07142**	1D	14,0	14,30	15,95	47144 47145 47146
	07143	1,5D	21,0			
	07144	2D	28,0			
	07145	2,5D	35,0			
	07146	3D	42,0			
M15 x 1.5	**07152**	1D	15,0	15,50	16,95	47154 47155 47156
	07153	1,5D	22,5			
	07154	2D	30,0			
	07155	2,5D	37,5			
	07156	3D	45,0			



TÜVRheinland ZERTIFIZIERT Management System ISO 9001:2015 ISO 14001:2015 www.tuv.com ID 9108624624

Further materials and surface finishes on demand. We will be pleased to give you advice.
Phone: +49 (0) 231 / 725 790 -0 eMail: info@hokon-verschlusstechnik.de
Fax: +49 (0) 231 / 725 790 -10 Homepage: www.hokon-verschlusstechnik.de

„Recoil“
Inserts, tools and repair-kits

Metric coarse thread

Wire thread inserts**„free running“**
Tap set content:

- taper, intermediate and bottoming

Thread inner- Ø	Art. no.	Length		Core- Ø	Outside- Ø	Screw- tap
		D	mm	spiral tap Ø in mm	in mm	art. no.
M16 x 1,5	**07162**	1D	16,0	16,50	17,95	47164 47165 47166
	07163	1,5D	24,0			
	07164	2D	32,0			
	07165	2,5D	40,0			
	07166	3D	48,0			
M18 x 2,0	**07182**	1D	18,0	18,50	20,60	47184 47185 47186
	07183	1,5D	27,0			
	07184	2D	36,0			
	07185	2,5D	45,0			
	07186	3D	54,0			
M18 x 1,5	**08182**	1D	18,0	18,50	19,95	48184 48185 48186
	08183	1,5D	27,0			
	08184	2D	36,0			
	08185	2,5D	45,0			
	08186	3D	54,0			
M20 x 2,0	**07202**	1D	20,0	20,50	22,60	47204 47205 47206
	07203	1,5D	30,0			
	07204	2D	40,0			
	07205	2,5D	50,0			
	07206	3D	60,0			
M20 x 1,5	**08202**	1D	20,0	20,50	21,95	48204 48205 48206
	08203	1,5D	30,0			
	08204	2D	40,0			
	08205	2,5D	50,0			
	08206	3D	60,0			
M22 x 2,0	**07222**	1D	22,0	22,50	24,60	47224 47225 47226
	07223	1,5D	33,0			
	07224	2D	44,0			
	07225	2,5D	55,0			
	07226	3D	66,0			
M22 x 1,5	**08222**	1D	22,0	22,50	23,95	48224 48225 48226
	08223	1,5D	33,0			
	08224	2D	44,0			
	08225	2,5D	55,0			
	08226	3D	66,0			
M24 x 2,0	**07242**	1D	24,0	24,50	26,60	47244 47245 47246
	07243	1,5D	36,0			
	07244	2D	48,0			
	07245	2,5D	60,0			
	07246	3D	72,0			
M24 x 1,5	**08242**	1D	24,0	24,50	25,95	48244 48245 48246
	08243	1,5D	36,0			
	08244	2D	48,0			
	08245	2,5D	60,0			
	08246	3D	72,0			
M26 x 1,5	**08262**	1D	26,0	26,50	27,95	-
	08263	1,5D	39,0			
	08264	2D	52,0			
	08265	2,5D	65,0			
	08266	3D	78,0			



„Recoil“
Inserts, tools and repair-kits

Metric coarse thread

Wire thread inserts**„free running“**
Tap set content:

- taper, intermediate and bottoming

Thread inner- ø	Art. no.	Length		Core- Ø	Outside- Ø	Screw- tap
		D	mm	spiral tap Ø in mm	in mm	art. no.
M27 x 2,0	**07272**	1D	27,0	27,50	29,60	47274 47275 47276
	07273	1,5D	40,5			
	07274	2D	54,0			
	07275	2,5D	67,5			
	07276	3D	81,0			
M30 x 2,0	**07302**	1D	30,0	30,50	32,60	47304 47305 47306
	07303	1,5D	45,0			
	07304	2D	60,0			
	07305	2,5D	75,0			
	07306	3D	90,0			
M30 x 1,5	**08302**	1D	30,0	30,50	31,95	48304 48305 48306
	08303	1,5D	45,0			
	08304	2D	60,0			
	08305	2,5D	75,0			
	08306	3D	90,0			
M36 x 3,0	**07362**	1D	36,0	37,00	39,90	47364 47365 47366
	07363	1,5D	54,0			
	07364	2D	72,0			
	07365	2,5D	90,0			
	07366	3D	108,0			
M36 x 1,5	**08362**	1D	36,0	-	-	48364 48365 48366
	08363	1,5D	54,0			
	08364	2D	72,0			
	08364	2,5D	90,0			
	08366	3D	108,0			
M39 x 3,0	**07392**	1D	39,0	40,00	42,90	47394 47395 47396
	07393	1,5D	58,5			
	07394	2D	78,0			
	07395	2,5D	97,5			
	07396	3D	117,0			
M39 x 2,0	**08392**	1D	39,0	39,50	41,60	48394 48395 48396
	08393	1,5D	58,5			
	08394	2D	78,0			
	08395	2,5D	97,5			
	08396	3D	117,0			
M42 x 3,0	**07422**	1D	42,0	43,00	45,90	47424 47425 47426
	07423	1,5D	63,0			
	07424	2D	84,0			
M42 x 2,0	**08422**	1D	42,0	42,50	44,60	48424 48425 48426
	08423	1,5D	63,0			
	08424	2D	84,0			



TÜVRheinland ZERTIFIZIERT Management System ISO 9001:2015 ISO 14001:2015 www.tuv.com ID 9108624624

Further materials and surface finishes on demand. We will be pleased to give you advice.
Phone: +49 (0) 231 / 725 790 -0 eMail: info@hokon-verschlusstechnik.de
Fax: +49 (0) 231 / 725 790 -10 Homepage: www.hokon-verschlusstechnik.de

„Recoil“
Inserts, tools and repair-kits

Metric coarse thread

Wire thread inserts **„locking“**
Tap set content:

- taper, intermediate and bottoming

Thread inner- ø	Art. no.	Length		Core- Ø	Outside- Ø	Screw- tap
		D	mm	spiral tap Ø in mm	in mm	art. no.
M8 -1,0	**17082**	1D	8,0	8,30	9,30	47084 47085 47086
	17083	1,5D	12,0			
	17084	2D	16,0			
	17085	2,5D	20,0			
	17086	3D	24,0			
M10 -1,25	**17102**	1D	10,0	10,40	11,62	47104 47105 47106
	17103	1,5D	15,0			
	17104	2D	20,0			
	17105	2,5D	25,0			
	17106	3D	30,0			
M12 -1,5	**17122**	1D	12,0	12,50	13,95	47124 47125 47126
	17123	1,5D	18,0			
	17124	2D	24,0			
	17125	2,5D	30,0			
	17126	3D	36,0			
M14 -1,5	**17142**	1D	14,0	14,50	15,95	47144 47145 47146
	17143	1,5D	21,0			
	17144	2D	28,0			
	17145	2,5D	35,0			
	17146	3D	42,0			
M16 -1,5	**17162**	1D	16,0	16,50	17,95	47164 47165 47166
	17163	1,5D	24,0			
	17164	2D	32,0			
	17165	2,5D	40,0			
	17166	3D	48,0			
M18 -2,0	**17182**	1D	18,0	18,50	20,60	47184 47185 47186
	17183	1,5D	27,0			
	17184	2D	36,0			
	17185	2,5D	45,0			
	17186	3D	54,0			
M20 -2,0	**17202**	1D	20,0	20,50	22,60	47204 47205 47206
	17103	1,5D	30,0			
	17104	2D	40,0			
	17105	2,5D	50,0			
	17106	3D	60,0			
M22 -2,0	**17222**	1D	22,0	22,50	24,60	47224 47225 47226
	17223	1,5D	33,0			
	17224	2D	44,0			
	17225	2,5D	55,0			
	17226	3D	66,0			
M24 -2,0	**17242**	1D	24,0	24,50	26,60	47244 47245 47246
	17243	1,5D	36,0			
	17244	2D	48,0			
	17245	2,5D	60,0			
	17246	3D	72,0			



„Recoil“
Inserts, tools and repair-kits

Metric coarse thread

Wire thread inserts **„locking“**
Tap set content:

- taper, intermediate and bottoming

Thread inner- ø	Art. no.	Length		Core- Ø	Outside- Ø	Screw- tap
		D	mm	spiral tap Ø in mm	in mm	art. no.
M27 .2,0	**17272**	1D	27,0	27,50	29,60	47274 47275 47276
	17273	1,5D	40,5			
	17274	2D	54,0			
	17275	2,5D	67,5			
	17276	3D	81,0			
M30 -2,0	**17302**	1D	30,0	30,50	32,60	47304 47305 47306
	17303	1,5D	45,0			
	17304	2D	60,0			
	17305	2,5D	75,0			
	17306	3D	90,0			
M36 -3,0	**17362**	1D	36,0	37,00	39,90	47364 47365 47366
	17363	1,5D	54,0			
	17364	2D	72,0			
	17365	2,5D	90,0			
	17366	3D	108,0			
M39 -3,0	**17392**	1D	39,0	40,00	42,90	47394 47395 47396
	17393	1,5D	58,5			
	17394	2D	78,0			



TÜVRheinland ZERTIFIZIERT Management System ISO 9001:2015 ISO 14001:2015 www.tuv.com ID 9108624624

Further materials and surface finishes on demand. We will be pleased to give you advice.
Phone: +49 (0) 231 / 725 790 -0 eMail: info@hokon-verschlusstechnik.de
Fax: +49 (0) 231 / 725 790 -10 Homepage: www.hokon-verschlusstechnik.de

„Recoil“
Inserts, tools and repair-kits

American- coarse thread

Wire thread inserts **„standard“ (UNC)**
Tap set content:

- taper, intermediate and bottoming

Thread inner- ø	Art. no.	Length		Core- Ø	Outside- Ø	Screw- tap
		D	mm	spiral tap Ø in mm	in mm	art. no.
2 -56	**03522**	1D	2,0	2,3	2,84	43524 43525 43526
	03523	1,5D	3,0			
	03524	2D	4,0			
	03525	2,5D	5,0			
	03526	3D	6,0			
3 -48	**03532**	1D	2,2	2,7	-	43534 43535 43536
	03533	1,5D	3,3			
	03534	2D	4,4			
	03535	2,5D	5,5			
	03536	3D	6,6			
4 -40	**03542**	1D	2,5	3,0	3,67	43544 43545 43546
	03543	1,5D	3,8			
	03544	2D	5,0			
	03545	2,5D	6,3			
	03546	3D	7,5			
5 -40	**03552**	1D	3,0	3,4	4,00	43554 43555 43556
	03553	1,5D	4,5			
	03554	2D	6,0			
	03555	2,5D	7,5			
	03556	3D	9,0			
6 -32	**03562**	1D	3,5	3,7	4,54	43564 43565 43566
	03563	1,5D	5,3			
	03564	2D	7,0			
	03565	2,5D	8,8			
	03566	3D	10,5			
8 -32	**03582**	1D	4,0	4,4	5,20	43584 43585 43586
	03583	1,5D	6,0			
	03584	2D	8,0			
	03585	2,5D	10,0			
	03586	3D	12,0			
10 -24	**03602**	1D	5,0	5,0	6,20	43604 43605 43606
	03603	1,5D	7,5			
	03604	2D	10,0			
	03605	2,5D	12,5			
	03606	3D	15,0			
12 -24	**03622**	1D	6,0	5,8	6,86	43624 43625 43626
	03623	1,5D	9,0			
	03624	2D	12,0			
	03625	2,5D	15,0			
	03626	3D	18,0			
1/4 -20	**03042**	1D	7,0	6,7	8,00	43044 43045 43046
	03043	1,5D	10,5			
	03044	2D	14,0			
	03045	2,5D	17,5			
	03046	3D	21,0			
5/16 -18	**03052**	1D	8,0	8,3	9,77	43054 43055 43056
	03053	1,5D	12,0			
	03054	2D	16,0			
	03055	2,5D	20,0			
	03056	3D	24,0			



„Recoil“
Inserts, tools and repair-kits

American- coarse thread

Wire thread inserts **„standard“ (UNC)**
Tap set content:

- taper, intermediate and bottoming

Thread inner- ø	Art. no.	Length		Core- Ø	Outside- Ø	Screw- tap
		D	mm	spiral tap Ø in mm	in mm	art. no.
3/8 -16	**03062**	1D	10,0	9,9	11,59	43064
	03063	1,5D	15,0			43065
	03064	2D	20,0			43066
	03065	2,5D	25,0			
	03066	3D	30,0			
7/16 -14	**03072**	1D	11,0	11,5	13,47	43074
	03073	1,5D	16,5			43075
	03074	2D	22,0			43076
	03075	2,5D	27,5			
	03076	3D	33,0			
1/2 -13	**03082**	1D	11,0	13,0	15,24	43084
	03083	1,5D	16,5			43085
	03084	2D	22,0			43086
	03085	2,5D	27,5			
	03086	3D	33,0			
9/16 -12	**03092**	1D	14,0	14,5	17,04	43094
	03093	1,5D	21,0			43095
	03094	2D	28,0			43096
	03095	2,5D	35,0			
	03096	3D	42,0			
5/8 -11	**03102**	1D	15,0	16,5	18,88	43104
	03103	1,5D	22,5			43105
	03104	2D	30,0			43106
	03105	2,5D	37,5			
	03106	3D	45,0			
11/16 -11	**03102**	1D	16,0	-	-	43114
	03103	1,5D	24,0			43115
	03104	2D	32,0			43116
	03105	2,5D	40,0			
	03106	3D	48,0			
3/4 -10	**03122**	1D	18,0	19,80	22,35	43124
	03123	1,5D	27,0			43125
	03124	2D	36,0			43126
	03125	2,5D	45,0			
	03126	3D	54,0			
7/8 -9	**03142**	1D	22,0	23,0	25,89	43144
	03143	1,5D	33,0			43145
	03144	2D	44,0			43146
	03145	2,5D	55,0			
	03146	3D	66,0			
1“ -8	**03162**	1D	24,0	26,0	29,53	43164
	03163	1,5D	36,0			43165
	03164	2D	48,0			43166
	03165	2,5D	60,0			
	03166	3D	72,0			



TÜVRheinland ZERTIFIZIERT Management System ISO 9001:2015 ISO 14001:2015 www.tuv.com ID 9108624624

Further materials and surface finishes on demand. We will be pleased to give you advice.
Phone: +49 (0) 231 / 725 790 -0 eMail: info@hokon-verschlusstechnik.de
Fax: +49 (0) 231 / 725 790 -10 Homepage: www.hokon-verschlusstechnik.de

„Recoil“
Inserts, tools and repair-kits

American- coarse thread

Wire thread inserts **„standard“ (UNC)**
Tap set content:

- taper, intermediate and bottoming

Thread inner- ø	Art. no.	Length		Core- Ø	Outside- Ø	Screw- tap
		D	mm	spiral tap Ø in mm	in mm	art. no.
1 1/8 -7	**03182**	1D	26,0	29,5	33,29	43184 43185 43186
	03183	1,5D	39,0			
	03184	2D	52,0			
	03185	2,5D	65,0			
	03186	3D	78,0			
1 1/4 -7	**03202**	1D	30,0	33,0	36,46	43204 43205 43206
	03203	1,5D	45,0			
	03204	2D	60,0			
	03205	2,5D	75,0			
	03206	3D	90,0			
1 3/8 -7	**03222**	1D	36,0	-	-	43224 43225 43226
	03223	1,5D	54,0			
	03224	2D	72,0			
	03225	2,5D	90,0			
	03226	3D	108,0			
1 1/2 -6	**03242**	1D	39,0	39,0	43,60	43244 43245 43246
	03243	1,5D	58,5			
	03244	2D	78,0			
	03245	2,5D	97,5			
	03246	3D	117,0			



„Recoil“
Inserts, tools and repair-kits

American- fine thread

Wire thread inserts **„standard“ (UNF)**
Tap set content:

- taper, intermediate and bottoming



Thread inner- ø	Art. no.	Length		Core- Ø	Outside- Ø	Screw- tap
		D	mm	spiral tap Ø in mm	in mm	art. nr.
3 -56	**04532**	1D	2,2	2,70	-	44534 44535 44536
	04533	1,5D	3,3			
	04534	2D	4,4			
	04535	2,5D	5,5			
	04536	3D	6,6			
4 -48	**04542**	1D	2,5	3,0	3,53	44544 44545 44546
	04543	1,5D	3,8			
	04544	2D	5,0			
	04545	2,5D	6,3			
	04546	3D	7,5			
6 -40	**04562**	1D	3,5	3,7	4,33	44564 44565 44566
	04563	1,5D	5,3			
	04564	2D	7,0			
	04565	2,5D	8,8			
	04566	3D	10,5			
8 -36	**04582**	1D	4,0	4,4	5,08	44584 44585 44586
	04583	1,5D	6,0			
	04584	2D	8,0			
	04585	2,5D	10,0			
	04586	3D	12,0			
10 -32	**04602**	1D	5,0	5,1	5,86	44604 44605 44606
	04603	1,5D	7,5			
	04604	2D	10,0			
	04605	2,5D	12,5			
	04606	3D	15,0			
1/4 -28	**04042**	1D	7,0	6,6	7,53	44044 44045 44046
	04043	1,5D	10,5			
	04044	2D	14,0			
	04045	2,5D	17,5			
	04046	3D	21,0			
5/16 -24	**04052**	1D	8,0	8,2	9,31	44054 44055 44056
	04053	1,5D	12,0			
	04054	2D	16,0			
	04055	2,5D	20,0			
	04056	3D	24,0			
3/8 -24	**04062**	1D	10,0	9,8	10,90	44064 44065 44066
	04063	1,5D	15,0			
	04064	2D	20,0			
	04065	2,5D	25,0			
	04066	3D	30,0			
7/16 -20	**04072**	1D	11,0	11,5	12,76	44074 44075 44076
	04073	1,5D	16,5			
	04074	2D	22,0			
	04075	2,5D	27,5			
	04076	3D	33,0			

TÜVRheinland ZERTIFIZIERT Management System ISO 9001:2015 ISO 14001:2015 www.tuv.com ID 9108624624

Further materials and surface finishes on demand. We will be pleased to give you advice.
Phone: +49 (0) 231 / 725 790 -0 eMail: info@hokon-verschlusstechnik.de
Fax: +49 (0) 231 / 725 790 -10 Homepage: www.hokon-verschlusstechnik.de

„Recoil“
Inserts, tools and repair-kits

American –fine thread

Wire thread inserts **„standard“ (UNF)**
Tap set content:

- taper, intermediate and bottoming



Thread inner- ø	Art. no.	Length		Core- Ø	Outside- Ø	Screw- tap
		D	mm	spiral tap Ø in mm	in mm	art. no.
1/2 -20	**04082**	1D	11,0	13,0	14,35	44084 44085 44086
	04083	1,5D	16,5			
	04084	2D	22,0			
	04085	2,5D	27,5			
	04086	3D	33,0			
9/16 -18	**04092**	1D	14,0	14,5	16,12	44094 44095 44096
	04093	1,5D	21,0			
	04094	2D	28,0			
	04095	2,5D	35,0			
	04096	3D	42,0			
5/8 -18	**04102**	1D	15,0	16,3	17,71	44104 44105 44106
	04103	1,5D	22,5			
	04104	2D	30,0			
	04105	2,5D	37,5			
	04106	3D	45,0			
3/4 -16	**04122**	1D	18,0	19,5	21,11	44124 44125 44126
	04123	1,5D	27,0			
	04124	2D	36,0			
	04125	2,5D	45,0			
	04126	3D	54,0			
7/8 -14	**04142**	1D	22,0	22,5	24,58	44144 44145 44146
	04143	1,5D	33,0			
	04144	2D	44,0			
	04145	2,5D	55,0			
	04146	3D	66,0			
1“ -12	**04162**	1D	24,0	26,0	28,15	44164 44165 44166
	04163	1,5D	36,0			
	04164	2D	48,0			
	04165	2,5D	60,0			
	04166	3D	72,0			
1“ -14	**04162-1**	1D	24,0	26,0	27,76	44164-14 44165-14 44166-14
	04163-1	1,5D	36,0			
	04164-1	2D	48,0			
	04165-1	2,5D	60,0			
	04166-1	3D	72,0			
1 1/8 -12	**04182**	1D	26,0	29,5	31,33	44184 44185 44186
	04183	1,5D	39,0			
	04184	2D	52,0			
	04185	2,5D	65,0			
	04186	3D	78,0			
1 1/4 -12	**04202**	1D	30,0	32,5	34,50	44204 44205 44206
	04203	1,5D	45,0			
	04204	2D	60,0			
	04205	2,5D	75,0			
	04206	3D	90,0			

„Recoil“
Inserts, tools and repair-kits

American –fine thread

Wire thread inserts **„standard“ (UNF)**
Tap set content:

- taper, intermediate and bottoming

Thread inner- ø	Art. no.	Length		Core- Ø	Outside- Ø	Screw- tap
		D	mm	spiral tap Ø in mm	in mm	art. no.
1 3/8 -12	**04222**	1D	36,0	36,0	37,68	44224 44225 44226
	04223	1,5D	54,0			
	04224	2D	72,0			
	04225	2,5D	90,0			
	04226	3D	108,0			
1 1/2 - 12	**04242**	1D	39,0	39,0	40,85	44244 44245 44246
	04243	1,5D	58,5			
	04244	2D	78,0			
	04245	2,5D	97,5			
	04246	3D	117,0			



TÜVRheinland ZERTIFIZIERT Management System ISO 9001:2015 ISO 14001:2015 www.tuv.com ID 9108624624

Further materials and surface finishes on demand. We will be pleased to give you advice.
Phone: +49 (0) 231 / 725 790 -0 eMail: info@hokon-verschlusstechnik.de
Fax: +49 (0) 231 / 725 790 -10 Homepage: www.hokon-verschlusstechnik.de

„Recoil“
Inserts, tools and repair-kits

American thread

Wire thread inserts **„locking“ (UNC)**
Tap set content:

- taper, intermediate and bottoming

Thread inner- ø	Art. no.	Length		Core- ø	Outside- ø	Screw- tap
		D	mm	spiral tap Ø in mm	in mm	art. no.
2 -56	**13522**	1D	2,0	2,3	2,84	43524
	13523	1,5D	3,0			43525
	13524	2D	4,05			43526
	13525	2,5D	5,0			
	13526	3D	6,0			
3 -48	**13532**	1D	2,2	2,7		43534
	13533	1,5D	3,3			43535
	13534	2D	4,4			43536
	13535	2,5D	5,5			
	13536	3D	6,6			
4 -40	**13542**	1D	2,5	3,0	3,67	43544
	13543	1,5D	3,8			43545
	13544	2D	5,0			43546
	13545	2,5D	6,3			
	13546	3D	7,5			
5 -40	**13552**	1D	3,0	3,4	4,00	43554
	13553	1,5D	4,5			43555
	13554	2D	6,0			43556
	13555	2,5D	7,5			
	13556	3D	9,0			
6 -32	**13562**	1D	3,5	3,7	4,54	43564
	13563	1,5D	5,3			43565
	13564	2D	7,0			43566
	13565	2,5D	8,8			
	13566	3D	10,5			
8 -32	**13582**	1D	4,0	4,4	5,20	43584
	13583	1,5D	6,0			43585
	13584	2D	8,0			43586
	13585	2,5D	10,0			
	13586	3D	12,0			
10 -24	**13602**	1D	5,0	5,0	6,20	43604
	13603	1,5D	7,5			43605
	13604	2D	10,0			43606
	13605	2,5D	12,5			
	13606	3D	15,0			
12 -24	**13622**	1D	6,0	5,8	6,86	43624
	13623	1,5D	9,0			43625
	13624	2D	12,0			43626
	13625	2,5D	15,0			
	13626	3D	18,0			
1/4 -20	**13042**	1D	7,0	6,7	8,00	43044
	13043	1,5D	10,5			43045
	13044	2D	14,0			43046
	13045	2,5D	17,5			
	13046	3D	21,0			



„Recoil“
Inserts, tools and repair-kits

American thread

Wire thread inserts **„locking“ (UNC)**
Tap set content:

- taper, intermediate and bottoming

Thread inner- ø	Art. no.	Length		Core- ø	Outside- ø	Screw- tap
		D	mm	spiral tap Ø in mm	in mm	art. no.
5/16 -18	**13052**	1D	8,0	8,3	9,77	43054
	13053	1,5D	12,0			43055
	13054	2D	16,0			43056
	13055	2,5D	20,0			
	13056	3D	24,0			
3/8 -16	**13062**	1D	10,0	9,9	11,59	43064
	13063	1,5D	15,0			43065
	13064	2D	20,0			43066
	13065	2,5D	25,0			
	13066	3D	30,0			
7/16 -14	**13072**	1D	11,0	11,5	13,47	43074
	13073	1,5D	16,5			43075
	13074	2D	22,0			43076
	13075	2,5D	27,5			
	13076	3D	33,0			
1/2 -13	**13082**	1D	11,0	13,0	15,24	43084
	13083	1,5D	16,5			43085
	13084	2D	22,0			43086
	13085	2,5D	27,5			
	13086	3D	33,0			
9/16 -12	**13092**	1D	14,0	14,5	17,04	43094
	13093	1,5D	21,0			43095
	13094	2D	28,0			43096
	13095	2,5D	35,0			
	13096	3D	42,0			
5/8 -11	**13102**	1D	15,0	16,5	18,88	43104
	13103	1,5D	22,5			43105
	13104	2D	30,0			43106
	13105	2,5D	37,5			
	13106	3D	45,0			
11/16 -11	**13112**	1D	16,0			-
	13113	1,5D	24,0			
	13114	2D	32,0			
	13115	2,5D	40,0			
	13116	3D	48,0			
3/4 -10	**13122**	1D	18,0	19,8	22,35	43124
	13123	1,5D	27,0			43125
	13124	2D	36,0			43126
	13125	2,5D	45,0			
	13126	3D	54,0			
7/8 -9	**13142**	1D	22,0	23,0	25,89	43144
	13143	1,5D	33,0			43145
	13144	2D	44,0			43146
	13145	2,5D	55,0			
	13146	3D	66,0			



TÜVRheinland ZERTIFIZIERT Management System ISO 9001:2015 ISO 14001:2015 www.tuv.com ID 9108624624

Further materials and surface finishes on demand. We will be pleased to give you advice.
Phone: +49 (0) 231 / 725 790 -0 eMail: info@hokon-verschlusstechnik.de
Fax: +49 (0) 231 / 725 790 -10 Homepage: www.hokon-verschlusstechnik.de

„Recoil“
Inserts, tools and repair-kits

American thread

Wire thread inserts **„locking“ (UNC)**
Tap set content:

- taper, intermediate and bottoming

Thread inner- ø	Art. no.	Length		Core- ø	Outside- ø	Screw- tap
		D	mm	spiral tap Ø in mm	in mm	art. no.
1“ -8	**13162**	1D	24,0	26,0	29,53	43164 43165 43166
	13163	1,5D	36,0			
	13164	2D	48,0			
	13165	2,5D	60,0			
	13166	3D	72,0			
1 1/8 -7	**13182**	1D	26,0	29,5	33,29	43184 43185 43186
	13183	1,5D	39,0			
	13184	2D	52,0			
	13185	2,5D	65,0			
	13186	3D	78,0			
1 1/4 -7	**13202**	1D	30,0	33,0	36,46	43204 43205 43206
	13203	1,5D	45,0			
	13204	2D	60,0			
	13205	2,5D	75,0			
	13206	3D	90,0			
1 3/8 -7	**13222**	1D	36,0	-	-	43224 43225 43226
	13223	1,5D	54,0			
	13224	2D	72,0			
	13225	2,5D	90,0			
	13226	3D	108,0			
1 1/2 -6	**13242**	1D	39,0	39,0	43,60	43244 43245 43246
	13243	1,5D	58,5			
	13244	2D	78,0			
	13245	2,5D	97,5			
	13246	3D	117,0			



„Recoil“
Inserts, tools and repair-kits

American fine thread

Wire thread inserts **„locking“ (UNF)**

Tap set content:

- taper, intermediate and bottoming



Thread inner- ø	Art. no.	Length		Core- ø	Outside- ø	Screw- tap
		D	mm	spiral tap Ø in mm	in mm	art. no.
3 -56	**14532**	1D	2,2	2,65	-	44534
	14533	1,5D	3,3			44535
	14534	2D	4,4			44536
4 -48	**14542**	1D	2,5	3,0	3,53	44544
	14543	1,5D	3,8			44545
	14544	2D	5,0			44546
6 -40	**14562**	1D	3,5	3,7	4,33	44564
	14563	1,5D	5,3			44565
	14564	2D	7,0			44566
8 -36	**14582**	1D	4,0	4,4	5,08	44584
	14583	1,5D	6,0			44585
	14584	2D	8,0			44586
10 -32	**14602**	1D	5,0	5,1	5,86	44604
	14603	1,5D	7,5			44605
	14604	2D	10,0			44606
	14605	2,5D	12,5			
	14606	3D	15,0			
1/4 -28	**14042**	1D	7,0	6,6	7,53	44044
	14043	1,5D	10,5			44045
	14044	2D	14,0			44046
	14045	2,5D	17,5			
	14046	3D	21,0			
5/16 -24	**14052**	1D	8,0	8,2	9,31	44054
	14053	1,5D	12,0			44055
	14054	2D	16,0			44056
	14055	2,5D	20,0			
	14056	3D	24,0			
3/8 -24	**14062**	1D	10,0	9,8	10,90	44064
	14063	1,5D	15,0			44065
	14064	2D	20,0			44066
	14065	2,5D	25,0			
	14066	3D	30,0			
7/16 -20	**14072**	1D	11,0	11,5	12,76	44074
	14073	1,5D	16,5			44075
	14074	2D	22,0			44076
	14075	2,5D	27,5			
	14076	3D	33,0			

TÜVRheinland ZERTIFIZIERT Management System ISO 9001:2015 ISO 14001:2015 www.tuv.com ID 9108624624

Further materials and surface finishes on demand. We will be pleased to give you advice.
Phone: +49 (0) 231 / 725 790 -0 eMail: info@hokon-verschlusstechnik.de
Fax: +49 (0) 231 / 725 790 -10 Homepage: www.hokon-verschlusstechnik.de

„Recoil“
Inserts, tools and repair-kits

American fine thread

Wire thread inserts **„locking“ (UNF)**
Tap set content:

- taper, intermediate and bottoming

Thread inner- ø	Art. no.	Length		Core- ø	Outside- ø	Screw- tap
		D	mm	spiral tap Ø in mm	in mm	art. no.
1/2 -20	**14082**	1D	11,0	13,0	14,35	44084 44085 44086
	14083	1,5D	16,5			
	14084	2D	22,0			
	14085	2,5D	27,5			
	14086	3D	33,0			
9/16 -18	**14092**	1D	14,0	14,5	16,12	44094 44095 44096
	14093	1,5D	21,0			
	14094	2D	28,0			
	14095	2,5D	35,0			
	14096	3D	42,0			
5/8 -18	**14102**	1D	15,0	16,3	17,71	44104 44105 44106
	14103	1,5D	22,5			
	14104	2D	30,0			
	14105	2,5D	37,5			
	14106	3D	45,0			
3/4 -16	**14122**	1D	18,0	19,5	21,11	44124 44125 44126
	14123	1,5D	27,0			
	14124	2D	36,0			
	14125	2,5D	45,0			
	14126	3D	54,0			
7/8 -14	**14142**	1D	22,0	22,5	24,58	44144 44145 44146
	14143	1,5D	33,0			
	14144	2D	44,0			
	14145	2,5D	55,0			
	14146	3D	66,0			
1“ -12	**14162**	1D	24,0	26,0	28,15	44164 44165 44166
	14163	1,5D	36,0			
	14164	2D	48,0			
	14165	2,5D	60,0			
	14166	3D	72,0			
1“ -14	**14162-1**	1D	24,0	26,0	27,76	44164-14 44165-14 44166-14
	14163-1	1,5D	36,0			
	14164-1	2D	48,0			
	14165-1	2,5D	60,0			
	14166-1	3D	72,0			
1 1/8 -12	**14182**	1D	26,0	29,5	31,33	44184 44185 44186
	14183	1,5D	39,0			
	14184	2D	52,0			
	14185	2,5D	65,0			
	14186	3D	78,0			
1 1/4 -12	**14202**	1D	30,0	32,5	34,50	44204 44205 44206
	14203	1,5D	45,0			
	14204	2D	60,0			
	14205	2,5D	75,0			
	14206	3D	90,0			



„Recoil“
Inserts, tools and repair-kits

American fine thread

Wire thread inserts **„locking“ (UNF)**
Tap set content:

- taper, intermediate and bottoming

Thread inner- ø	Art. no.	Length		Core- ø	Outside- ø	Screw- tap
		D	mm	spiral tap Ø in mm	in mm	art. no.
1 3/8 -12	**14222**	1D	36,0	36,0	37,68	44224 44225 44226
	14223	1,5D	54,0			
	14224	2D	72,0			
	14225	2,5D	90,0			
	14226	3D	108,0			
1 1/2 -12	**14242**	1D	39,0	39,0	40,85	44244 44245 44246
	14243	1,5D	58,5			
	14244	2D	78,0			
	14245	2,5D	97,5			
	14246	3D	117,0			



American thread

Wire thread inserts **(NPT)**
Tap set content:

- taper, intermediate and bottoming

Thread inner- ø	Art. no.	Length		Core- Ø	Outside- Ø	Screw- tap
		D	mm	spiral tap Ø in mm	in mm	art. no.
1/8 -27	**06023**	1,5D	0,273	-	-	46025 46026
1/4 -18	**06043**	1,5D	0,394	-	-	46045 46046
3/8 -18	**06063**	1,5D	0,407	-	-	46065 46066
1/2 -14	**06083**	1,5D	0,534	-	-	46085 46086
3/4 -14	**06123**	1,5D	0,553	-	-	46125 46126
1 -11 1/2	**06163**	1,5D	0,661	-	-	46165 46166



TÜVRheinland ZERTIFIZIERT
Management System ISO 9001:2015 ISO 14001:2015
www.tuv.com ID 9108624624

Further materials and surface finishes on demand. We will be pleased to give you advice.
Phone: +49 (0) 231 / 725 790 -0 eMail: info@hokon-verschlusstechnik.de
Fax: +49 (0) 231 / 725 790 -10 Homepage: www.hokon-verschlusstechnik.de

„Recoil“
Inserts, tools and repair-kits

Special size
Wire thread inserts

Thread inner- ø	Art. no.	Length		Core- Ø	Outside- Ø	Screw- tap
		D	mm	spiral tap Ø in mm	in mm	art. no.
1/4 -24	**04042-24**	1D		-	-	44044-24 44045-24 44046-24
	04043-24	1,5D				

Special size
Wire thread inserts
Tap set content:
- taper, intermediate and bottoming

Thread inner- ø	Art. no.	Length		Core- Ø	Outside- Ø	Screw- tap
		D	mm	spiral tap Ø in mm	in mm	art. no.
1/4 -32	**04042-32**	1D		13,6	-	44044-32 44045-32 44046-32
	04043-32	1,5D				
HARLEY 7/16 -16	**04073-16**			-	-	44074-16 44075-16 44076-16
CUMMINS 11/16 -16	**04110-16-1.25**			-	-	44114-16 44115-16 44116-16
CARBY 7/8 -20	**04140-20-.330**			-	-	44144-20 44145-20 44146-20
1“ -20	**04161-20-.325**			-	-	44165-16

„Recoil“
Inserts, tools and repair-kits

British- coarse thread

Wire thread inserts **„standard“ (BSW / Withworth-thread)**
Tap set content:

- taper, intermediate and bottoming



Thread inner- ø	Art. no.	Length		Core- Ø	Outside- Ø	Screw- tap
		D	mm	spiral tap Ø in mm	in mm	art. no.
1/8 -40	**02022**	1D	-	3,4	3,93	42024 42025 42026
	02023	1,5D	-			
	02024	2D	-			
	02025	2,5D	-			
	02026	3D	-			
3/16 -24	**02032**	1D	-	5,0	6,01	42034 42035 42036
	02033	1,5D	-			
	02034	2D	-			
	02035	2,5D	-			
	02036	3D	-			
1/4 -20	**02042**	1D	7,0	6,7	7,84	42044 42045 42046
	02043	1,5D	10,5			
	02044	2D	14,0			
	02045	2,5D	17,5			
	02046	3D	21,0			
5/16 -18	**02052**	1D	8,0	8,3	9,59	42054 42055 42056
	02053	1,5D	12,0			
	02054	2D	16,0			
	02055	2,5D	20,0			
	02056	3D	24,0			
3/8 -16	**02062**	1D	10,0	9,9	11,39	42064 42065 42066
	02063	1,5D	15,0			
	02064	2D	20,0			
	02065	2,5D	25,0			
	02066	3D	30,0			
7/16 -14	**02072**	1D	11,0	11,5	13,24	42074 42075 42076
	02073	1,5D	16,5			
	02074	2D	22,0			
	02075	2,5D	27,5			
	02076	3D	33,0			
1/2 -12	**02082**	1D	12,0	13,0	15,17	42084 42085 42086
	02083	1,5D	18,0			
	02084	2D	24,0			
	02085	2,5D	30,0			
	02086	3D	36,0			
9/16 -12	**02092**	1D	14,0	15,0	16,76	42094 42095 42096
	02093	1,5D	21,0			
	02094	2D	28,0			
	02095	2,5D	35,0			
	02096	3D	42,0			
5/8 -11	**02102**	1D	15,0	16,7	18,57	42104 42105 42106
	02103	1,5D	22,5			
	02104	2D	30,0			
	02105	2,5D	37,5			
	02106	3D	45,0			

TÜVRheinland ZERTIFIZIERT Management System ISO 9001:2015 ISO 14001:2015 www.tuv.com ID 9108624624

Further materials and surface finishes on demand. We will be pleased to give you advice.
Phone: +49 (0) 231 / 725 790 -0 eMail: info@hokon-verschlusstechnik.de
Fax: +49 (0) 231 / 725 790 -10 Homepage: www.hokon-verschlusstechnik.de

„Recoil“
Inserts, tools and repair-kits

British- coarse thread

Wire thread inserts **„standard“ (BSW / Withworth-thread)**
Tap set content:

- taper, intermediate and bottoming



Thread inner- ø	Art. no.	Length		Core- Ø	Outside- Ø	Screw- tap
		D	mm	spiral tap Ø in mm	in mm	art. no.
3/4 -10	**02122**	1D	18,0	20,0	22,02	42124
	02123	1,5D	27,0			42125
	02124	2D	36,0			42126
	02125	2,5D	45,0			
	02126	3D	54,0			
7/8 -9	**02142**	1D	22,0	23,0	25,52	42144
	02143	1,5D	33,0			42145
	02144	2D	44,0			42146
	02145	2,5D	55,0			
	02146	3D	66,0			
1“ -8	**02162**	1D	24,0	26,5	-	42164
	02163	1,5D	36,0			42165
	02164	2D	48,0			42166
	02165	2,5D	60,0			
	02166	3D	72,0			

„Recoil“
Inserts, tools and repair-kits

British- fine thread

Wire thread inserts **„standard“ (BSF)**
Tap set content:

- taper, intermediate and bottoming



Thread inner- ø	Art. no.	Length		Core- Ø	Outside- Ø	Screw- tap
		D	mm	spiral tap Ø in mm	in mm	art. no.
3/16 -32	**00032**	1D	-	5,0	5,71	40034 40035 40036
	00033	1,5D	-			
	00034	2D	-			
	00035	2,5D	-			
	00036	3D	-			
1/4 - 20	**00042**	1D	7,0	6,6	7,51	40044 40045 40046
	00043	1,5D	10,5			
	00044	2D	14,0			
	00045	2,5D	17,5			
	00046	3D	21,0			
5/16 -22	**00052**	1D	8,0	8,3	9,30	40054 40055 40056
	00053	1,5D	12,0			
	00054	2D	16,0			
	00055	2,5D	20,0			
	00056	3D	24,0			
3/8 -20	**00062**	1D	10,0	9,9	11,02	40064 40065 40066
	00063	1,5D	15,0			
	00064	2D	20,0			
	00065	2,5D	25,0			
	00066	3D	30,0			
7/16 -18	**00072**	1D	11,0	11,5	12,78	40074 40075 40076
	00073	1,5D	16,5			
	00074	2D	22,0			
	00075	2,5D	27,5			
	00076	3D	33,0			
1/2 -16	**00082**	1D	12,0	13,1	14,57	40084 40085 40086
	00083	1,5D	18,0			
	00084	2D	24,0			
	00085	2,5D	30,0			
	00086	3D	36,0			
9/16 -16	**00092**	1D	14,0	14,8	16,16	40094 40095 40096
	00093	1,5D	21,0			
	00094	2D	28,0			
	00095	2,5D	35,0			
	00096	3D	42,0			
5/8 -14	**00102**	1D	15,0	16,4	18,01	40104 40105 40106
	00103	1,5D	22,5			
	00104	2D	30,0			
	00105	2,5D	37,5			
	00106	3D	45,0			
3/4 - 12	**00122**	1D	18,0	19,5	21,53	40124 40125 40126
	00123	1,5D	27,0			
	00124	2D	36,0			
	00125	2,5D	45,0			
	00126	3D	54,0			

TÜVRheinland ZERTIFIZIERT Management System ISO 9001:2015 ISO 14001:2015 www.tuv.com ID 9108624624

Further materials and surface finishes on demand. We will be pleased to give you advice.
Phone: +49 (0) 231 / 725 790 -0 eMail: info@hokon-verschlusstechnik.de
Fax: +49 (0) 231 / 725 790 -10 Homepage: www.hokon-verschlusstechnik.de

„Recoil“
Inserts, tools and repair-kits

British- fine thread

Wire threads inserts **„standard“ (BSF)**
Tap set content:

- taper, intermediate and bottoming



Thread inner- ø	Art. no.	Length		Core- Ø	Outside- Ø	Screw- tap
		D	mm	spiral tap Ø in mm	in mm	art. no.
7/8 -11	**00142**	1D	22,0	22,5	24,94	40144 40145 40146
	00143	1,5D	33,0			
	00144	2D	44,0			
	00145	2,5D	55,0			
	00146	3D	66,0			
1“ -10	**00162**	1D	24,0	26,0	28,38	40164 40165 40166
	00163	1,5D	36,0			
	00164	2D	48,0			
	00165	2,5D	60,0			
	00166	3D	72,0			

British- thread

Wire thread inserts **„standard“ (BA)**
Tap set content:

- taper, intermediate and bottoming

Thread inner- ø	Art. no.	Length		Core- Ø	Outside- Ø	Screw- tap
		D	mm	spiral tap Ø in mm	in mm	art. no.
0BA	**00502**	1D	-	6,2	7,12	40504 40505 40506
	00503	1,5D	-			
	00504	2D	-			
	00505	2,5D	-			
	00506	3D	-			
1BA	**00512**	1D	-	5,5	6,31	40514 40515 40516
	00513	1,5D	-			
	00514	2D	-			
	00515	2,5D	-			
	00516	3D	-			
2BA	**00522**	1D	-	4,9	5,61	40524 40525 40526
	00523	1,5D	-			
	00524	2D	-			
	00525	2,5D	-			
	00526	3D	-			
4BA	**00542**	1D	-	3,8	4,35	40544 40545 40546
	00543	1,5D	-			
	00544	2D	-			
	00545	2,5D	-			
	00546	3D	-			
6BA	**00562**	1D	-	2,9	3,40	40564 40565 40566
	00563	1,5D	-			
	00564	2D	-			
	00565	2,5D	-			
	00566	3D	-			

Phone: +49 (0) 231 / 725 790 -0 eMail: info@hokon-verschlusstechnik.de
Fax: +49 (0) 231 / 725 790 -10 Homepage: www.hokon-verschlusstechnik.de

„Recoil“
Inserts, tools and repair-kits

British- thread

Wire thread inserts **„standard“ (BSC)**
Tap set content:

- taper, intermediate and bottoming



Thread inner- ø	Art. no.	Length		Core- ø	Outside- ø	Screw- tap
		D	mm	spiral tap ø in mm	in mm	art. no.
5/16 -26	**06502**	1D	-	-	-	46504
	06503	1,5D	-			46505
	06504	2D	-			46506
3/8 -26	**06602**	1D	-	-	-	46604
	06603	1,5D	-			46605
	06604	2D	-			46606
7/16 -26	**06702**	1D	-	-	-	46704
	06703	1,5D	-			46705
	06704	2D	-			46706
1/2 -26	**06802**	1D	-	-	-	46804
	06803	1,5D	-			46805
	06804	2D	-			46806

British- thread

Wire thread inserts **„standard“ 8 TPI (UN)**
Tap set content:

- taper, intermediate and bottoming



Thread inner- ø	Art. no.	Length		Core- ø	Outside- ø	Screw- tap
		D	mm	spiral tap ø in mm	in mm	art. no.
1 1/8 -3	**06182**	1D	-	-	-	-
	06183	1,5D	-			
	06184	2D	-			
1 1/4 -8	**06202**	1D	-	-	-	46204
	06203	1,5D	-			46205
	06204	2D				46206
1 3/8 -8	**06222**	1D	-	-	-	46224
	06223	1,5D	-			46225
	06224	2D	-			46226
1 1/2 -8	**06242**	1D	-	-	-	46244
	06243	1,5D	-			46245
	06244	2D	-			46246
1 5/8 -8	**06262**	1D	-	-	-	46264
	06263	1,5D	-			46265
	06264	2D	-			46266
1 3/4 -8	**06282**	1D	-	-	-	46284
	06283	1,5D	-			46285
	06284	2D	-			46286
1 7/8 -8	**06302**	1D	-	-	-	46304
	06303	1,5D	-			46305
	06304	2D	-			46306
2“ -8	**06322**	1D	-	-	-	46324
	06323	1,5D	-			46325
	06324	2D	-			46326

TÜVRheinland ZERTIFIZIERT Management System ISO 9001:2015 ISO 14001:2015 www.tuv.com ID 9108624624

Further materials and surface finishes on demand. We will be pleased to give you advice.
Phone: +49 (0) 231 / 725 790 -0 eMail: info@hokon-verschlusstechnik.de
Fax: +49 (0) 231 / 725 790 -10 Homepage: www.hokon-verschlusstechnik.de

„Recoil“
Inserts, tools and repair-kits

British standart- pipe thread

Wire thread inserts **„standard“ (BSP)**
Tap set content:

- taper, intermediate and bottoming



Thread inner- ø	Art. no.	Length		Core- Ø	Outside- Ø	Screw- tap
		D	mm	spiral tap Ø in mm	in mm	art. no.
1/8 -28	**01022**	1D	-	9,9	-	41024
	01023	1,5D	0,273			41025
	01024	2D	-			41026
1/4 -19	**01042**	1D	-	13,5	-	41044
	01043	1,5D	0,394			41045
	01044	2D	-			41046
3/8 -19	**01062**	1D	-	17,0	-	41064
	01063	1,5D	0,407			41065
	01064	2D	-			41066
1/2 -14	**01082**	1D	-	21,5	-	41084
	01083	1,5D	0,534			41085
	01084	2D	-			41086
5/8 -14	**01102**	1D	-	23,5	-	41104
	01103	1,5D	-			41105
	01104	2D	-			41106
3/4 -14	**01122**	1D	-	27,0	-	41124
	01123	1,5D	0,553			41125
	01124	2D	-			41126
1“ -11	**01162**	1D	-	33,5	-	41164
	01163	1,5D	0,661			41165
	01164	2D	-			41166

„Recoil“
Inserts, tools and repair-kits

Thread repair- kits
„Metric“

Content:

- HSS special screw tap
- prewinder tool
- tappet remover
- inserts
- instructions



Thread inner- ø „metric“	Art. no.	Inserts per kit	Core- ø spiral tap Ø in mm
M2 -0,4	**35028**	15	2,1
M2,2 -0,45	**35018**	15	2,3
M2,5 -0,45	**35258**	15	2,6
M3 -0,5	**35038**	15	3,2
M3,5 -0,6	**35358**	10	3,7
M4 -0,7	**35048**	15	4,2
M5 -0,8	**35058**	15	5,2
M6 -1,0	**35068**	15	6,3
M7 -1,0	**35078**	10	7,3
M8 -1,25	**35088**	15	8,3
M9 -1,25	**35098**	15	9,4
M10 -1,5	**35108**	10	10,4
M11 -1,5	**35118**	5	11,5
M12 -1,75	**35128**	10	12,5
M13 -1,75	**35138**	6	13,5
M14 -2,0	**35148**	6	14,5
M15 -2,0	**35158**	6	15,5
M16 -2,0	**35168**	6	16,5
M18 -2,5	**35188**	6	18,8
M20 -2,5	**35208**	6	20,8
M22 -2,5	**35228**	5	22,8
M24 -3,0	**35248**	5	24,8
M27 -3,0	**35278**	5	28,0
M30 -3,5	**35308**	5	30,5
M30 -3,0	**35308-3**	5	31,0
M36 -4,0	**35368**	4	37,0
M39 -4,0	**35698**	5	40,0
M42 -4,5	**35428**	5	43,0
M42 -4,0	**35428-4**	4	43,0



TÜVRheinland ZERTIFIZIERT
Management System ISO 9001:2015 ISO 14001:2015
www.tuv.com ID 9108624624

Further materials and surface finishes on demand. We will be pleased to give you advice.
Phone: +49 (0) 231 / 725 790 -0
Fax: +49 (0) 231 / 725 790 -10
eMail: info@hokon-verschlusstechnik.de
Homepage: www.hokon-verschlusstechnik.de

„Recoil“
Inserts, tools and repair-kits

Thread repair- kits
„Metric- fine“

Content:

- HSS special screw tap
- prewinder tool
- tappet remover
- inserts
- instructions



Thread inner- ø „metric- fine“	Art. no.	Inserts per kit
M8 -1,0	**37088**	15
M9 -1,0	**37098**	10
M10 -1,25	**37108**	10
M10 -1,25 x 25	**37108**	10
M11 -1,25	**37118**	10
M12 -1,5	**37128**	10
M13 -1,5	**37138**	6
M14 -1,5	**37148**	6
M15 -1,5	**37158**	5
M16 -1,5	**37168**	6
M18 -2,0	**37188**	6
M20 -2,0	**37208**	6
M22 -2,0	**37228**	5
M24 -2,0	**37248**	5
M27 -2,0	**37278**	5
M30 -2,0	**37308**	5
M36 -3,0	**37368**	4
M39 -3,0	**37398**	5
M42 -3,0	**37428**	4

Thread repair- kits
„Metric- X- fine“



Thread inner- ø „metric- X- fine“	Art. no.	Inserts per kit
M10 -1,0	**38108**	10
M11 -1,0	**38118**	10
M12 -1,25	**38128**	5
M13 -1,25	**38138**	6
M14 -1,25	**38148**	5
M18 -1,5	**38188-1**	6
M20 -1,5	**38208**	5
M22 -1,5	**38228**	5
M24 -1,5	**38248**	5
M26 -1,5	**38268**	5
M27 -1,5	**38278**	5
M30 -1,5	**38308**	5
M36 -1,5	**38368**	4
M39 -2,0	**38398**	5
M42 -2,0	**38428**	4

„Recoil“
Inserts, tools and repair-kits

Thread repair- kits
„Inch“- (BSF)

Content:

- HSS special screw tap standard
- inserts
- prewinder tool
- instructions

Thread inner- ø „inch“	Art. no.	Inserts per kit
3/16 -32	**30038**	15
1/4 -26	**30048**	15
5/16 -22	**30058**	15
3/8 -20	**30068**	10
7/16 -18	**30078**	10
1/2 -16	**30088**	10
9/16 -16	**30090**	5
5/8 -14	**30108**	6
3/4 -12	**30128**	6
7/8 -11	**30148**	5
1 -10	**30168**	5
1 1/4 -9	**30208**	5





TÜVRheinland ZERTIFIZIERT
Management System ISO 9001:2015 ISO 14001:2015
www.tuv.com ID 9108624624

Further materials and surface finishes on demand. We will be pleased to give you advice.
Phone: +49 (0) 231 / 725 790 -0 eMail: info@hokon-verschlusstechnik.de
Fax: +49 (0) 231 / 725 790 -10 Homepage: www.hokon-verschlusstechnik.de

„Recoil“
Inserts, tools and repair-kits

Thread repair- Kits
„Inch“- (BSW)

Content:

- HSS special screw tap standard
- inserts
- prewinder tool
- instructions



Thread inner- ø „inch“	Art. no.	Inserts per kit
1/8 -40	**32028**	15
3/16 -24	**32038**	15
1/4 -20	**32048**	15
5/16 -18	**32058**	15
3/8 -16	**32068**	10
7/16 -14	**32078**	10
1/2 -12	**32088**	10
9/16 -12	**32098**	6
5/8 -11	**32108**	5
3/4 -10	**32128**	6
7/8 -9	**32148**	5
1 -8	**32168**	5
1 1/8 -7	**32188**	5
1 1/4 -7	**32208**	5
1 3/8 -6	**32228**	5
1 1/2 -6	**32248**	4



Thread repair- kits
„Inch“- (BSC/ BRASS)

Thread inner- ø „inch“	Art. no.	Inserts per kit
5/16 -26	**36508**	15
3/8 -26	**36608**	10
7/16 -26	**36708**	10
1/2 -26	**36808**	10

„Recoil“
Inserts, tools and repair-kits

Thread repair- kits
„Inch“- (BA)

Content:

- HSS special screw tap standard
- inserts
- prewinder tool
- instructions

Thread inner- ø „inch“	Art. no.	Inserts per kit
0 BA	**30508**	15
1 BA	**30518**	10
2 BA	**30528**	15
4 BA	**30548**	15
6 BA	**30568**	15



Thread repair- kits
„Inch“- (BSP)

Thread inner- ø „inch“	Art. no.	Inserts per kit
1/8 -28	**31028**	10
1/4 -19	**31048**	10
3/8 -19	**31068**	6
1/2 -14	**31088**	5
5/8 -14	**31108**	5
3/4 -14	**31128**	5
1 -11	**31168**	5



TÜVRheinland ZERTIFIZIERT Management System ISO 9001:2015 ISO 14001:2015 www.tuv.com ID 9108624624

Further materials and surface finishes on demand. We will be pleased to give you advice.
Phone: +49 (0) 231 / 725 790 -0 eMail: info@hokon-verschlusstechnik.de
Fax: +49 (0) 231 / 725 790 -10 Homepage: www.hokon-verschlusstechnik.de

„Recoil“
Inserts, tools and repair-kits

Thread repair- Kits
„Inch“- (UNC)

Content:

- HSS special screw tap
- prewinder tool
- tappet remover
- inserts
- instructions

Thread inner- ø „inch“	Art. no.	Inserts per kit
2 -56	**33528**	15
3 -48	**33538**	15
4 -40	**33548**	15
5 -40	**33558**	10
6 -32	**33568**	15
8 -32	**33588**	15
10 -24	**33608**	15
12 -24	**33628**	15
1/4 -20	**33048**	15
5/16 -18	**33058**	15
3/8 -16	**33068**	15
7/16 -14	**33078**	10
1/2 -13	**33088**	10
9/16 -12	**33098**	6
5/8 -11	**33108**	6
11/16 -11	**33118**	5
3/4 -10	**33128**	6
7/8 -9	**33148**	5
1 -8	**33168**	5
1 1/8 -7	**33188**	5
1 1/4 -7	**33208**	5
1 3/8 -6	**33228**	5
1 1/2 -6	**33248**	4





„Recoil“
Inserts, tools and repair-kits

Thread repair- kits
„Inch“- (UNF)

Content:

- HSS special screw tap
- prewinder tool
- tappet remover
- inserts
- instructions



Thread inner- ø „inch“	Art. no.	Inserts per kit
3 -56	**34538**	15
4 -48	**34548**	15
6 -40	**34568**	15
8 -36	**34588**	15
10 -32	**34608**	15
12 -28	**34628**	10
1/4 -28	**34048**	15
5/16 -24	**34058**	15
3/8 -24	**34068**	15
7/16 -20	**34078**	10
1/2 -20	**34088**	10
9/16 -18	**34098**	6
5/8 -18	**34108**	6
3/4 -16	**34128**	6
7/8 -14	**34148**	5
1 -12	**34168**	5
1 -14	**34168-14**	5
1 1/8 -12	**34188**	5
1 1/4 -12	**34208**	5
1 3/8 -12	**34228**	3
1 1/2 -12	**34248**	3



Thread repair- kits
„Inch“- (NPT)

Thread inner- ø „inch“	Art. no.	Inserts per kit
1/8 -27	**36028**	10
1/4 -18	**36048**	10
3/8 -18	**36068**	6
1/2 -14	**36088**	5
3/4 -14	**36128**	5
1 -11 1/2	**36168**	5

TÜVRheinland ZERTIFIZIERT Management System ISO 9001:2015 ISO 14001:2015 www.tuv.com ID 9108624624

Further materials and surface finishes on demand. We will be pleased to give you advice.
Phone: +49 (0) 231 / 725 790 -0 eMail: info@hokon-verschlusstechnik.de
Fax: +49 (0) 231 / 725 790 -10 Homepage: www.hokon-verschlusstechnik.de

„Recoil“
Inserts, tools and repair-kits

Thread repair- kits
„Inch“- (8 TPI UN)

Content:

- HSS special screw tap
- prewinder tool
- tappet remover
- inserts
- instructions

Thread inner- ø „inch“	Art. no.	Inserts per kits
1 1/8 -8	**36188**	5
1 1/4 -8	**36208**	5
1 3/8 -8	**36228**	5
1 1/2 -8	**36248**	4
1 5/8 -8	**36268**	4
1 3/4 -8	**36288**	4
1 7/8 -8	**36308**	4
2 -8	**36328**	4



Thread repair- kits
„Inch“- (special size)

Thread inner- ø „inch“	Art. no.	Inserts per kit
UNEF		
1/4 -32	**34040-32**	10
HARLEY		
1/4 -24	**34040-24**	10
7/16 -16	**34070-16**	10
CARBURETTOR		
7/8 -20	**34140-20**	10
1 -20	**34160-20**	10
CUMMINS- HEAD BOLT		
11/16 -11	**34110-16**	10



„Recoil“
Inserts, tools and repair-kits

Thread repair- (combi kits)
„Inch“

Content:

- HSS special screw tap standard
- inserts
- prewinder tool
- instructions



Thread type	Art. no.	Inserts per kit
BA	**30504**	0, 1, 2, 4, 6
BSF	**30004R**	1/4 , 5/16, 3/8, 7/16, 1/2
BSP	**31004R**	1/8, 1/4 , 3/8, 1/2
BSW	**32004R**	1/4 ,5/16, 3/8, 7/16, 1/2
UNC	**33004R**	1/4 ,5/16, 3/8, 7/16, 1/2
UNF	**34004R**	1/4 ,5/16, 3/8, 7/16, 1/2
BSC/BRASS	**36001**	1/4 ,5/16, 3/8, 7/16, 1/2
NPT	**36004**	1/8, 1/4, 3/8, 1/2

Thread repair- (combi kits)
„Metric“

Thread type	Art. no.	Inserts per kit
metric	**33005R**	M6, M8, M10, M12, M14 -1,25
metric	**35003R**	M4, M5, M6, M8, M10
metric	**35004R**	M5, M6, M8, M10, M12
metric	**35005R**	M6, M8, M10, M12, M16
fine	**37000R**	M8-1, M10-1, M10-1,25, M12-1,25, M12-1,5
M/Cycle	**38006R**	M6, M8, M10-1, M10-1,25, M12-1,25, M14-1,25
OPE	**38007R**	M5, M6, M8-1,25, M14-1,25, M1/4 -20, 5/16-18



TÜVRheinland ZERTIFIZIERT Management System ISO 9001:2015 ISO 14001:2015 www.tuv.com ID 9108624624

Further materials and surface finishes on demand. We will be pleased to give you advice.
Phone: +49 (0) 231 / 725 790 -0 eMail: info@hokon-verschlusstechnik.de
Fax: +49 (0) 231 / 725 790 -10 Homepage: www.hokon-verschlusstechnik.de

„Recoil“
Inserts, tools and repair-kits

Thread repair- (mini combi kits)
„Metric“

Content:
Per thread type 1x suitable tool

- HSS special screw tap standard
- Einsätze (3 different length equal thread sizes)
- prewinder tool
- instructions

Thread type	Art. no.	Inserts per kit
Metrisch	**35001**	M5, M6, M8

Thread repair- (mini combi kits)
„Inch“

Thread type	Art. no.	Inserts per kit
UNC	**33001**	1/4, 5/16, 3/8
UNF	**34001**	1/4, 5/16, 3/8

Bicycle treadle repair kit
„Left and right“

Content:

- 1x left special screw tap with guide lug
- 1x right special screw tap with guide lug
- 2x inserts (5 left/ 5 right)
- prewinder tool
- instructions

Thread type	Art. no.	Inserts per kit
UNEF	**34096-20**	5 9/16-20x 1/2 (12,7mm) long left inserts
		5 9/16-20x 1/2 (12,7mm) long right inserts

Phone: +49 (0) 231 / 725 790 -0 eMail: info@hokon-verschlusstechnik.de
Fax: +49 (0) 231 / 725 790 -10 Homepage: www.hokon-verschlusstechnik.de

„Recoil“
Inserts, tools and repair-kits

Refill packages
Wire thread inserts **„metric“**
For **repair- kits**

Length of the inserts in the refill packages:
1,5x nominal diameter
exception: When the length is denoted extra.

Thread inner- ø „metric“	Art. no.	Inserts per kit
M2,0 -0,4	**25023**	10
M2,2 -0,45	**25013**	10
M2,5 -0,45	**25253**	10
M3 -0,5	**25033**	10
M3 -0,6	**25353**	10
M4 -0,7	**25043**	10
M5 -0,8	**25053**	10
M6 -1,0	**25063**	10
M7 -1,0	**25073**	10
M8 -1,25	**25083**	10
M9 -1,25	**25093**	10
M10 -1,5	**25103**	10
M10 -1,5X2D	**25104**	10
M11 -1,5	**25113**	10
M12 -1,75	**25123**	10
M13 -1,75	**25133**	5
M14 -2,0	**25143**	5
M15 -2,0	**25153**	5
M16 -2,0	**25163**	5
M18 -2,5	**25183**	5
M20 -2,5	**25203**	5
M22 -2,5	**25223**	3
M24 -3,0	**25243**	3
M27 -3,0	**25273**	1
M30-3,5	**25303**	1
M30 -3,0	**25303-3**	1
M36 -4,0	**25363**	1
M39 -4,0	**25393**	1
M42 -4,5	**25423**	1
M42 -4,0	**25423-4**	1





TÜVRheinland ZERTIFIZIERT
Management System ISO 9001:2015 ISO 14001:2015
www.tuv.com ID 9108624624

Further materials and surface finishes on demand. We will be pleased to give you advice.
Phone: +49 (0) 231 / 725 790 -0 eMail: info@hokon-verschlusstechnik.de
Fax: +49 (0) 231 / 725 790 -10 Homepage: www.hokon-verschlusstechnik.de

„Recoil“
Inserts, tools and repair-kits

Refill packages
Wire thread inserts **„metric- fine“**
For **repair- kits**

Length of the inserts in the refill packages:
1,5x nominal diameter
Exception: When the length is denoted extra.



Thread inner- ø „metric- fine“	Art. no.	Inserts per kit
M8 -1,0	**27083**	10
M9 -1,0	**27093**	10
M10 -1,25	**27103**	10
M10 -1,25x25	**27105**	10
M11 -1,25	**27113**	10
M12 -1,5	**27123**	10
M13 -1,5	**27133**	5
M14 -1,5	**27143**	5
M15 -1,5	**27153**	5
M16 -1,5	**27163**	5
M18 -2,0	**27183**	5
M20 -2,0	**27203**	5
M22 -2,0	**27223**	3
M24 -2,0	**27243**	3
M27 -2,0	**27273**	1
M30 -2,0	**27303**	1
M36 -3,0	**27363**	1
M39 -3,0	**27393**	1
M42 -3,0	**27423**	1

Refill packages
Wire thread inserts **„metric- X- fine“**
For **repair- kits**



thread inner- ø „metric- X- fine“	art. no.	inserts per kit
M10 -1,0	**28103**	10
M11 -1,0	**28113**	10
M12 -1,25	**28123**	10
M13 -1,25	**28133**	5
M14 -1,25	see spark plug	
M18 -1,5	**28183**	5
M20 -1,5	**28203**	5
M22 -1,5	**28223**	3
M24 -1,5	**28243**	3
M26 -1,5	**28263**	1
M27 -1,5	**28273**	1
M30 -1,5	**28303**	1
M36 -1,5	**28363**	1
M39 -2,0	**28393**	1
M42 -2,0	**28423**	1

„Recoil“
Inserts, tools and repair-kits

Refill packages
Wire thread inserts **„inch“- (BSF)**
For **repair- kits**

It could be inserted several inserts
Successively; may be reduced with a pilot punch.

Thread inner- ø „inch“	Art. no.	Inserts per kit
3/16 -32	**20033**	10
1/4 -26	**20043**	10
5/16 -22	**20053**	10
3/8 -20	**20063**	10
7/16 -18	**20073**	10
1/2 -16	**20083**	10
9/16 -16	**20093**	5
5/8 -14	**20103**	5
3/4 -12	**20123**	5
7/8 -11	**20143**	3
1 -10	**10163**	3
1 1/4 -9	**20203**	1



Refill packages
Wire thread inserts **„inch“- (BSW)**
For **repair- kits**

Thread inner- ø „inch“	Art. no.	Inserts per kit
1/8 -40	**22023**	10
3/16 -24	**22033**	10
1/4 -20	**22043**	10
5/16 -18	**22053**	10
3/8 -16	**22063**	10
7/16 -14	**22073**	10
1/2 -12	**22083**	10
9/16 -12	**22093**	5
5/8 -11	**22103**	5
3/4 -10	**22123**	5
7/8 -9	**22143**	3
1 -8	**22163**	3



TÜVRheinland ZERTIFIZIERT
Management System
ISO 9001:2015
ISO 14001:2015
www.tuv.com ID 9108624624

Further materials and surface finishes on demand. We will be pleased to give you advice.
Phone: +49 (0) 231 / 725 790 -0 eMail: info@hokon-verschlusstechnik.de
Fax: +49 (0) 231 / 725 790 -10 Homepage: www.hokon-verschlusstechnik.de

„Recoil“
Inserts, tools and repair-kits

Refill packages
Wire thread inserts **„inch“- (BSC/BRASS)**
For **repair- kits**

It could be inserted several inserts
Successively; may be reduced with a pilot punch.



Thread inner- ø „inch“	Art. no.	Inserts per kit
5/16 -26	**26503**	10
3/8 -26	**26603**	10
7/16 -26	**26703**	10
1/2 -26	**26803**	10

Refill packages
Wire thread inserts **„inch“- (BA)**
For **repair- kits**

Thread inner- ø „inch“	Art. no.	Inserts per kit
0 BA	**20503**	10
1 BA	**20513**	10
2 BA	**20523**	10
4 BA	**20543**	10
6 BA	**20563**	10



Refill packages
Wire thread inserts **„inch“- (BSP)**
For **repair- kits**

Thread inner- ø „inch“	Art. no.	Inserts per kit
1/8 -28	**21023**	10
1/4 -19	**21043**	10
3/8 -19	**21063**	10
1/2 -14	**21083**	5
5/8 -14	**21103**	5
3/4 -14	**21123**	5
1 -11	**21163**	3

„Recoil“
Inserts, tools and repair-kits

Refill packages

Wire thread inserts **„inch“- (UNC)**
For **repair- kits**

It could be inserted several inserts
Successively; may be reduced with a pilot punch.

Thread inner- ø „inch“	Art. no.	Inserts per kit
2 -56	**23523**	10
3 -48	**23533**	10
4 -40	**23543**	10
5 -40	**23553**	10
6 -32	**23563**	10
8 -32	**23583**	10
10 -24	**23603**	10
12 -24	**23623**	10
1/4 -20	**23043**	10
5/16 -18	**23053**	10
3/8 -16	**23063**	10
7/16 -14	**23073**	10
1/2 -13	**23083**	10
9/16 -12	**23093**	5
5/8 -11X1D	**23102**	5
5/8 -11	**23103**	5
11/16 -11	**23113**	5
3/4 -10	**23123**	5
7/8 -9	**23143**	3
1 -8	**23163**	3
1 1/8 -7	**23183**	1
1 1/4 -7	**23203**	1
1 3/8 -6	**23223**	1
1 1/2 -6	**23243**	1





TÜVRheinland ZERTIFIZIERT
Management System
ISO 9001:2015
ISO 14001:2015
www.tuv.com ID 9108624624

Further materials and surface finishes on demand. We will be pleased to give you advice.
Phone: +49 (0) 231 / 725 790 -0 eMail: info@hokon-verschlusstechnik.de
Fax: +49 (0) 231 / 725 790 -10 Homepage: www.hokon-verschlusstechnik.de

„Recoil“
Inserts, tools and repair-kits

Refill packages
Wire thread inserts **„inch“- (UNF)**
For **repair- kits**

It could be inserted several inserts
successively ;may be reduced with a pilot punch.

Thread inner- ø „inch“	Art. no.	Inserts per kit
3 -56	**24533**	10
4 -48	**24543**	10
6 -40	**24563**	10
8 -36	**24583**	10
10 -32	**24603**	10
12 -28	**24623**	10
1/4 -28	**24043**	10
5/16 -24	**24053**	10
3/8 -24	**24063**	10
7/16 -20	**24073**	10
1/2 -20	**24083**	10
9/16 -18	**24093**	5
5/8 -18	**24103**	5
3/4 -16	**24123**	5
7/8 -14	**24143**	3
1 -12	**24163**	3
1 -14	**24163-14**	3
1 1/8 -12	**24183**	1
1 1/4 -12	**24203**	1
1 3/8 -12	**24223**	1
1 1/2 -12	**24243**	1





„Recoil“
Inserts, tools and repair-kits

Refill packages
Wire thread inserts **„inch“- (NPT)**
For **repair- kits**

It could be inserted several inserts
successively ;may be reduced with a pilot punch.

Thread inner- ø „inch“	Art. no.	Inserts per kit
1/8 -27	**26023**	10
1/4 -18	**26043**	10
3/8 -18	**26063**	10
1/2 -14	**26083**	5
3/4 -14	**26123**	5
1 -11 1/2	**26163**	5



Refill packages
Wire thread inserts **„inch“- (special size)**
For **repair- kits**

Thread inner- ø „inch“	Art. no.	Inserts per kit
UNEF		
1/4 -32	**24043-32**	10
HARLEY		
1/4 -24	**24043-24**	10
7/16 -16	**24073-16**	10



TÜVRheinland ZERTIFIZIERT
Management System
ISO 9001:2015
ISO 14001:2015
www.tuv.com ID 9108624624

Further materials and surface finishes on demand. We will be pleased to give you advice.
Phone: +49 (0) 231 / 725 790 -0 eMail: info@hokon-verschlusstechnik.de
Fax: +49 (0) 231 / 725 790 -10 Homepage: www.hokon-verschlusstechnik.de

„Recoil“
Inserts, tools and repair-kits

Spark plug
„Thread- repair- kits“

Content:

- HSS special screw tap
- prewinder tool
- tapped remover
- inserts
- instruction



Thread inner- ø	Art. no.	Inserts per kit
M10 -1,0	**38108**	10
M12 -1,25	**38128**	10
M14 -1,25*	**38148**	10
M14 -1,25	**38148**	5
M18 -1,5	**38188**	5

*incl. insert extracting tool

Spark plug kits have pilot nose taps for accurate self alignment eliminating the need for drilling.

Spark plug
„Wire thread inserts“

Thread inner- ø	Art. no.	Length	Core- ø	Outside- ø
		in inch	spiral tap Ø in mm	in mm
M10 -1,0	**08108**	0,339	-	-
	08109	1/2	-	-
M12 -1,25	**08122**	1/2	-	-
	08123	3/4	-	-
M14 -1,25	**08148**	3/8	14,25	15,62
	08141	0,472	14,25	15,62
	08147	7/16	14,25	15,62
	08149	1/2	14,25	15,62
	08140	3/4	14,25	15,62
M18 -1,5	**08189**	1/2	18,50	19,95



„Recoil“
Inserts, tools and repair-kits

Thread inserts
Wire thread inserts **„metric“- (taped)**

Thread inner- Ø „metric“	Art. no.	Length		Core- Ø	Outside- Ø	Screw- tap
		D	mm	spiral tap Ø in mm	in mm	art. no.
M2 x 0,4	**05012SF**	1D	2,2	2,10	-	45025
	05013SF	1,5D	3,3			
	05014SF	2D	4,4			
M2,5 x 0,45	**05252SF**	1D	2,5	2,60	-	45015
	05253SF	1,5D	3,8			
	05254SF	2D	5,0			
M3 x 0,5	**05032SF**	1D	2,5	3,10	3,65	45035
	05033SF	1,5D	3,8			
	05034SF	2D	5,0			
M4 x 0,7	**05042SF**	1D	4,0	4,10	4,91	45045
	05043SF	1,5D	6,0			
	05044SF	2D	8,0			
M5 x 0,8	**05052SF**	1D	5,0	5,20	6,04	45055
	05053SF	1,5D	7,5			
	05054SF	2D	10,0			
M6 x 1,0	**05062SF**	1D	7,0	6,20	7,30	45065
	05063SF	1,5D	10,5			
	05064SF	2D	14,0			
M8 x 1,25	**05082SF**	1D	8,0	8,30	8,30	45075
	05083SF	1,5D	12,5			
	05084SF	2D	16,0			
M8 x 1,0	**07082SF**	1D	8,0	8,20	-	47085
	07083SF	1,5D	12,0			
	07084SF	2D	16,0			
M12 -1,75	**05122SF**	1D	8,0	12,40	14,27	45125
	05123SF	1,5D	12,0			
	05124SF	2D	16,0			





TÜVRheinland ZERTIFIZIERT
Management System
ISO 9001:2015
ISO 14001:2015
www.tuv.com ID 9108624624

Further materials and surface finishes on demand. We will be pleased to give you advice.
Phone: +49 (0) 231 / 725 790 -0
Fax: +49 (0) 231 / 725 790 -10
eMail: info@hokon-verschlusstechnik.de
Homepage: www.hokon-verschlusstechnik.de

„Recoil“
Inserts, tools and repair-kits

Thread inserts
Wire thread inserts **„metric- locking“- (taped)**



Thread inner- Ø „metric“	Art. no.	Length		Core- Ø	Outside- Ø	Screw- tap
		D	mm	spiral tap Ø in mm	in mm	art. no.
M2,2 x 0,4	**15012SF**	1D	2,2	2,30	-	45015
	15013SF	1,5D	3,3			
	15014SF	2D	4,4			
M2,5 x 0,45	**15252SF**	1D	2,5	2,60	-	45255
	15253SF	1,5D	3,8			
	15254SF	2D	5,0			
M3,5 x 0,6	**15352SF**	1D	3,5	3,60	3,65	45355
	15353SF	1,5D	5,3			
	15354SF	2D	7,0			
M4 x 0,7	**15042SF**	1D	4,0	4,10	4,91	45045
	15043SF	1,5D	6,0			
	15044SF	2D	8,0			
M5 x 0,8	**15052SF**	1D	5,0	5,20	6,04	45055
	15053SF	1,5D	7,5			
	15054SF	2D	10,0			
M6 x 1,0	**15062SF**	1D	7,0	6,20	7,30	45065
	15063SF	1,5D	10,5			
	15064SF	2D	14,0			
M8 x 1,25	**15082SF**	1D	8,0	8,30	8,30	45075
	15083SF	1,5D	12,0			
	15084SF	2D	16,0			
M12 -1,75	**15122SF**	1D	8,0	12,40	-	47125
	15123SF	1,5D	12,0			
	15124SF	2D	16,0			

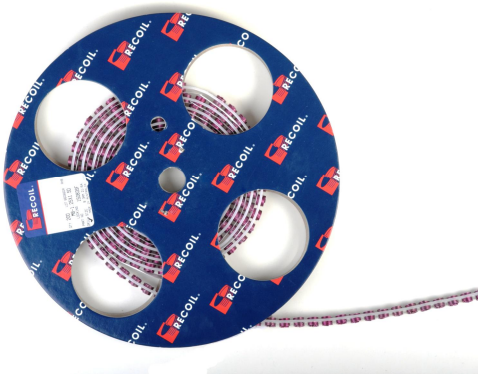

„Recoil“
Inserts, tools and repair-kits

Thread inserts
Wire thread inserts **„inch- UNC“- (taped)**

Thread inner- Ø „inch“	Art. no.	Length		Core- Ø	Outside- Ø	Screw- tap
		D	mm	spiral tap Ø in mm	in mm	art. no.
2- 56	**03522SF**	1D	2,0	2,3	2,84	43525
	03523SF	1,5D	3,0			
	03524SF	2D	4,0			
3- 48	**03532SF**	1D	2,2	2,7	-	43535
	03533SF	1,5D	3,3			
	03534SF	2D	4,4			
4- 40	**03542SF**	1D	2,5	3,0	-	43545
	03543SF	1,5D	3,8			
	03544SF	2D	5,0			
5- 40	**03552SF**	1D	2,5	3,1	3,67	43545
	03553SF	1,5D	3,8			
	03554SF	2D	5,0			
6- 32	**03562SF**	1D	3,5	3,4	4,00	43555
	03563SF	1,5D	5,3			
	03564SF	2D	7,0			
8- 32	**03582SF**	1D	4,0	4,4	-	43585
	03583SF	1,5D	6,0			
	03584SF	2D	8,0			
10- 24	**03042SF**	1D	5,0	3,8	4,54	43565
	03043SF	1,5D	7,5			
	03044SF	2D	10,0			
1/4- 20	**03042SF**	1D	7,0	6,7	8,00	43045
	03043SF	1,5D	10,5			
	03044SF	2D	14,0			
5/16- 18	**03052SF**	1D	8,0	8,3	-	43055
	03053SF	1,5D	12,0			
	03054SF	2D	16,0			



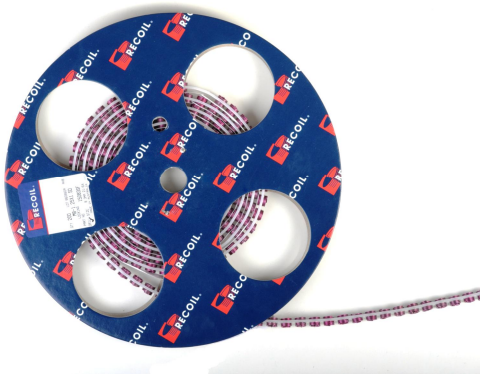

TÜVRheinland ZERTIFIZIERT
Management System
ISO 9001:2015
ISO 14001:2015
www.tuv.com ID 9108624624

Further materials and surface finishes on demand. We will be pleased to give you advice.
Phone: +49 (0) 231 / 725 790 -0
Fax: +49 (0) 231 / 725 790 -10
eMail: info@hokon-verschlusstechnik.de
Homepage: www.hokon-verschlusstechnik.de

„Recoil“
Inserts, tools and repair-kits

Thread inserts
Wire thread inserts **„inch- UNF“- (taped)**

Thread inner- Ø „inch“	Art. no.	Length		Core- Ø	Outside- Ø	Screw- tap
		D	mm	spiral tap Ø in mm	in mm	art. no.
3- 56	**04532SF**	1D	2,2	2,65	-	44535
	04533SF	1,5D	3,3			
	04534SF	2D	4,4			
4- 48	**04542SF**	1D	2,5	3,0	3,53	44545
	04543SF	1,5D	3,8			
	04544SF	2D	5,0			
6- 40	**04562SF**	1D	3,5	3,7	4,33	44565
	04563SF	1,5D	5,3			
	04564SF	2D	7,0			
8- 36	**04582SF**	1D	4,0	4,4	5,08	44585
	04583SF	1,5D	6,0			
	04584SF	2D	8,0			
10- 32	**04602SF**	1D	5,0	5,1	5,86	44605
	04603SF	1,5D	7,5			
	04604SF	2D	10,0			
1/4- 28	**04042SF**	1D	7,0	6,6	7,53	44045
	04043SF	1,5D	10,5			
	04044SF	2D	14,0			
5/16- 24	**04052SF**	1D	8,0	8,2	9,31	44055
	04053SF	1,5D	12,0			
	04054SF	2D	16,0			





„Recoil“
Inserts, tools and repair-kits

Thread inserts
Wire thread inserts **„inch- UNC“**
Locking- (taped)



Thread inner- Ø „inch“	Art. no.	Length		Core- Ø	Outside- Ø	Screw- tap
		D	mm	spiral tap Ø in mm	in mm	art. no.
2- 56	**13522SF**	1D	2,2	2,4	2,84	43525
	13523SF	1,5D	3,3			
	13524SF	2D	4,4			
3- 48	**13532SF**	1D	2,2	2,7	-	43535
	13533SF	1,5D	3,3			
	13534SF	2D	4,4			
4- 40	**13542SF**	1D	2,5	3,0	-	43545
	13543SF	1,5D	3,8			
	13544SF	2D	5,0			
5- 40	**13552SF**	1D	3,5	3,4	3,67	43545
	13553SF	1,5D	5,3			
	13554SF	2D	7,0			
6- 32	**13562SF**	1D	3,5	3,7	4,00	43555
	13563SF	1,5D	5,3			
	13564SF	2D	7,0			
8- 32	**13582SF**	1D	4,0	4,4	-	43585
	13583SF	1,5D	6,0			
	13584SF	2D	8,0			
10- 24	**13602SF**	1D	5,0	5,0	4,54	43565
	13603SF	1,5D	7,5			
	13604SF	2D	10,0			
1/4- 20	**13042SF**	1D	7,0	6,7	8,00	43045
	13043SF	1,5D	10,5			
	13044SF	2D	14,0			
5/16- 18	**13052SF**	1D	8,0	8,3	-	43055
	13053SF	1,5D	12,0			
	13054SF	2D	16,0			



TÜVRheinland ZERTIFIZIERT Management System ISO 9001:2015 ISO 14001:2015 www.tuv.com ID 9108624624

Further materials and surface finishes on demand. We will be pleased to give you advice.
Phone: +49 (0) 231 / 725 790 -0 eMail: info@hokon-verschlusstechnik.de
Fax: +49 (0) 231 / 725 790 -10 Homepage: www.hokon-verschlusstechnik.de

„Recoil“
Inserts, tools and repair-kits

Thread inserts
Wire thread inserts **„inch- UNF“**
Locking- (taped)



Thread inner- Ø „inch“	Art. no.	Length		Core- Ø	Outside- Ø	Screw- tap
		D	mm	spiral tap Ø in mm	in mm	art. no.
3- 56	**14532SF**	1D	2,2	2,65	-	44535
	14533SF	1,5D	3,3			
	14534SF	2D	4,4			
4- 48	**14542SF**	1D	2,5	3,0	3,53	44545
	14543SF	1,5D	3,8			
	14544SF	2D	5,0			
6- 40	**14562SF**	1D	3,5	3,7	4,33	44565
	14563SF	1,5D	5,3			
	14564SF	2D	7,0			
8- 36	**14582SF**	1D	4,0	4,4	5,08	44585
	14583SF	1,5D	6,0			
	14584SF	2D	8,0			
10- 32	**14602SF**	1D	5,0	5,1	5,86	44605
	14603SF	1,5D	7,5			
	14604SF	2D	10,0			
1/4- 28	**14042SF**	1D	7,0	6,6	7,53	44045
	14043SF	1,5D	10,5			
	14044SF	2D	14,0			
5/16- 24	**14052SF**	1D	8,0	8,2	9,31	44055
	14053SF	1,5D	12,0			
	14054SF	2D	16,0			

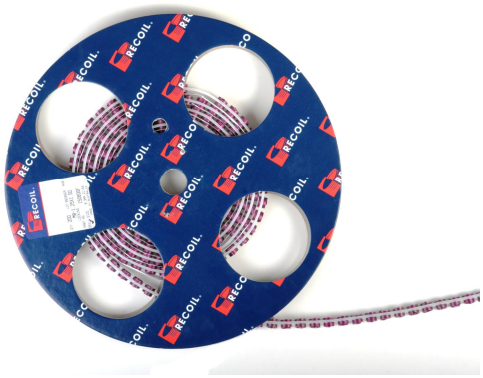

„Recoil“
Inserts, tools and repair-kits

Hand-installation tools
„Metric“

Thread Ø inner	Prewinder tool			Tang-break tool		Extracting-tool	
					with spring 		
	Plastic	Metal					
							
Coarse pitch thread							
M2 x 0,4			50061-20	M59060	59061	50001	
M2.2 x 0,45		55011	50061-21				
M2.5 x 0,45		55251	50069-21	M59070	59071		
M3 x 0,5	55032U	55031	50089-17	M59090	59091		50002
M3.5 x 0,6		55351	50095-15	M59100	59101		
M4 x 0,7	55042U	55041	50125-13	M59130	59121		
M5 x 0,8	55052U	55051	50156-9	M59160	59141	50003	
M6 x 1,0	55062U	55061	50188-5	M59190	59181		
M7 x 1,0		55071	50219-4				
M8 x 1,25	55082U	55081	50250-7	M59250	59241		
M10 x 1,5	55102U	55101	50281-4	M59280	59291		
M12 x 1,75	55122U	55121	50375-1	M59380			
M14 x 2		55146	50438-0				
M15 x 2			50438-0				
M16 x 2		55166	50500-0				
M18 x 2,5		55186	50591-0				
M22 x 2,5			50688				50004
M24 x 3			50750				
M27 x 3			50875				
M30 x 3,5			51000				
M30 x 3							
M36 x 4			51125				
M39 x 4			51250			50005 bis M65	
Fine thread							
M8 x 1		57081	50250-7			50002	
M10 x 1,0		58101	50313-4				
M10 x 1,25	57102	57101		M59310			
M12 x 1,25	58122	58121					
M12 x 1,5	57122U	57121				50003	
M14 x 1,5		57141	50438-0		59462		
M16 x 1,5		57161	50500-0				
M18 x 1,5		58181	50591-0				
M18 x 2							

TÜVRheinland ZERTIFIZIERT Management System ISO 9001:2015 ISO 14001:2015 www.tuv.com ID 9108624624

Further materials and surface finishes on demand. We will be pleased to give you advice.
Phone: +49 (0) 231 / 725 790 -0 eMail: info@hokon-verschlusstechnik.de
Fax: +49 (0) 231 / 725 790 -10 Homepage: www.hokon-verschlusstechnik.de

„Recoil“
Inserts, tools and repair-kits

Hand-installation tools
„Inch- standard“

Thread Ø inner	Prewinder tool			Tang-break tool	Extracting-tool	
	 Plastic	Metal		with spring 		
Standard						
2- 56		**53526**	**50061-17**	**59061**		
3- 48		**53536**	**50069**	**59071**		
4- 40	**53542U**	**53541**	**50077-17**	**59081**	**50001**	
5- 40		**53551**	**50089-18**	**59091**		
6- 32	**53562U**	**53561**	**50095-16**	**59101**		
					50003	
8- 32	**53582U**	**53581**	**50125-14**	**59121**	**50001**	
10- 24	**53602U**	**53601**	**50140-11**	**59141**		**50002**
12- 24		**53621**	**50156-10**			
1/4- 20	**53042U**	**53041**	**50188-10**	**59181**		
5/16- 18	**53052U**	**53051**	**50219-8**	**59241**		
3/8- 16	**53062U**	**53061**	**50281-4**	**59291**		
7/16- 14	**53072U**	**53071**	**50344-3**		**50003**	
1/2- 13	**53082U**	**53081**	**50375-2**	**59332**		
9/16- 12		**53096**	**50438**			
5/8- 11		**53106**	**50500**			
3/4- 10		**53126**	**50591**			
7/8- 9		**53146**	**50688**			
1-8		**53166**				
1 1/8- 7		**53186**	**50875**		**50004**	
1 1/4-7		**53206**	**51000**			
1 3/8- 6		**53226**	**51063**			
1 1/2- 6		**53246**	**21125**			**50005**

„Recoil“
Inserts, tools and repair-kits

Hand-installation tools
„Inch- fine thread“

Thread Ø inner	Prewinder tool			Tang-break tool	Extracting-tool	
				with spring 		
	Plastic	Metal				
						
Fine thread						
3- 56		**54531**	**50069-17**	**59071**	**50001**	
4- 48		**54541**	**50077-17**	**59081**		
6- 40		**54561**	**50095-17**	**59101**		
8- 36		**54581**	**50125-14**	**59121**		
10- 32	**54602U**	**54601**	**50156-11**	**59141**	**50002**	
1/4- 28	**54042U**	**54041**	**50188-10**	**59181**		
5/16- 24	**54052U**	**54051**	**50250**	**59241**		
3/8- 24	**54062U**	**54061**	**50313-6**	**59291**		**50003**
7/16- 20	**54072U**	**54071**	**50344-4**			
1/2- 20	**54082U**	**54081**	**50375-3**			
9/16- 18		**54091**	**50438**			
5/8- 18		**54101**	**50500**			
3/4- 16		**54121**	**50688**			
7/8- 14		**54141**	**50750**			
1- 12		**54161**	**51000**			
1- 14		**54171**				
1 1/8- 12		**54181**			**50004**	

TÜVRheinland ZERTIFIZIERT
Management System ISO 9001:2015 ISO 14001:2015
www.tuv.com ID 9108624624

Further materials and surface finishes on demand. We will be pleased to give you advice.
Phone: +49 (0) 231 / 725 790 -0 eMail: info@hokon-verschlusstechnik.de
Fax: +49 (0) 231 / 725 790 -10 Homepage: www.hokon-verschlusstechnik.de

„Recoil“
Inserts, tools and repair-kits

Automatic tools
„Pneumatic“
„Metric“

		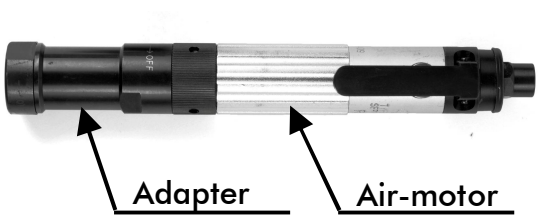		
Thread Ø inner	**Loading sleeve with drift pin**	**Adapter**	**Air-motor**	**Adapter+ Air-motor**
Coarse pitch thread				
M2,5- 0,45	**55250 (M8751-2:5-15)**	**56040**	**56011**	**NR-HL1409**
M3- 0,5	**55030 (M8751-3-15)**			
M4- 0,7	**55040 (M8751-4-15)**			
M5- 0,8	**55050 (M8751-5-15)**			
M6- 1	**55060 (M8751-6-15)**			
M8- 1	**55080 (M8755-8-15)**			**NR-HL1410**
M10- 1,5	**55100 (M8751-10-15)**			
M12- 1,75	**55120 (M8751-12-15)**			
M16- 2	**55160 (M8751-16)**			
Fine thread				
M8 -1	**57080 (M8755-8-15)**	**56040**	**56010**	**NR-HL1410**
M10- 1	**58100 (8755-10-15)**			
M10- 1,25	**57100 (M8756-10-15)**			
M12- 1,25	**58120 (M8756-12-15)**			
M12- 1,5	**57120 (M8753-12-15)**			
M14- 1,5	**57140 (M8753-14)**			

„Recoil“
Inserts, tools and repair-kits

Automatic tools
„Pneumatic“
„Inch“

		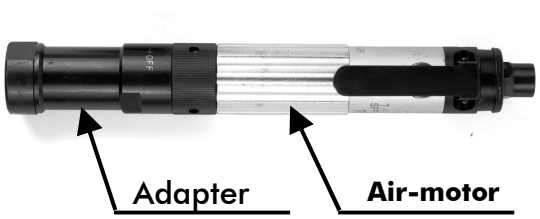		
Thread Ø inner	**Loading sleeve with drift pin**	**Adapter**	**Air-motor**	**Adapter+Air-motor**
Coarse pitch thread (UNC)				
2- 56	**53520 (M8551-02-15)**	**56030**	**56010**	**NR-HL1409**
4- 40	**53540 (M8551-04-15)**			
5- 40	**53550 (M8551-05-15)**			
6- 32	**53560 (M8551-06-15)**			
8- 32	**53580 (M8551-2-15)**			
10- 24	**53600 (M8551-3-15)**			
1/4- 20	**53040 (M8551-4-15)**			
5/16- 18	**53050 (M8251-5-15)**	**56040**		**NR-HL1410**
3/8- 16	**53060 (M8251-6-15)**			
7/16- 14	**53070 (M8251-7-15)**			
1/2-13	**53080 (M8251-8-15)**			
5/8- 11	**53100 (M8251-9)**		**56011**	
3/4- 10	**53120 (M8251-10)**			
Fine thread (UNF)				
6- 40	**54560 (M8552-06-15)**	**56030**	**56010**	**NR-HL1409**
10- 32	**54600 (M8552-3-15)**			
1/4- 28	**54040 (M8552-4-15)**			
5/16- 24	**54050 (M8252-5-15)**	**56040**		**NR-HL1410**
3/8- 24	**54060 (M8252-6-15)**			
7/16- 20	**54070 (M8252-7-15)**			
1/2- 20	**54080 (M8252-8-15)**			

Holding arms
„for prewinder tool“

Thread Ø inner	**Art.no.**
M2,2- 0,45	**56000**
M2,5- 0,45	
M3- 0,5	
2- 1/4	**56000**
5/16- 1/2	
9/16- 3/4	

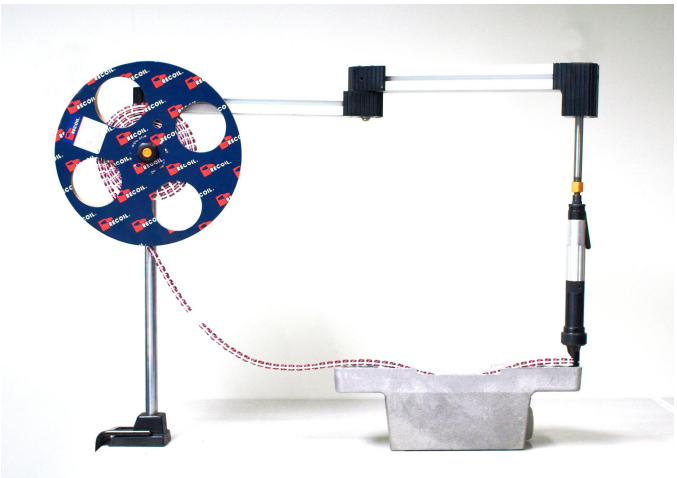

TÜVRheinland ZERTIFIZIERT Management System ISO 9001:2015 ISO 14001:2015 www.tuv.com ID 9108624624

Further materials and surface finishes on demand. We will be pleased to give you advice.
Phone: +49 (0) 231 / 725 790 -0 eMail: info@hokon-verschlusstechnik.de
Fax: +49 (0) 231 / 725 790 -10 Homepage: www.hokon-verschlusstechnik.de

HoKon
VERSCHLUSSTECHNIK &
SONDERKONSTRUKTIONEN

SNEP self locking nuts





General Industry



Wind-mill



Automotive Industry



Rail



Aero-space



Agricultural maschines

Management System ISO 9001:2015 ISO 14001:2015 TÜVRheinland ZERTIFIZIERT www.tuv.com ID 9108624624

Further materials and surface finishes on demand. We will be pleased to give you advice.
Phone: +49 (0) 231 / 725 790 -0 EMail: info@hokon-verschlusstechnik.de
Fax: +49 (0) 231 / 725 790 -10 Homepage: www.hokon-verschlusstechnik.de

SNEP self locking nuts

The SNEP self locking nut

The original single slotted self-locking nut developed in1954 is still available today alongside a wider range of self-locking nuts including the double slotted nut. Despite major advances in technology, the single-slotted self locking nut still outperforms its rivals in performance – sometimes simplicity is better. SNEP slotted nuts combine both extreme strength with re-usability so you can rely on it time and time again.

SNEP slotted nuts offer the following features and benefits:

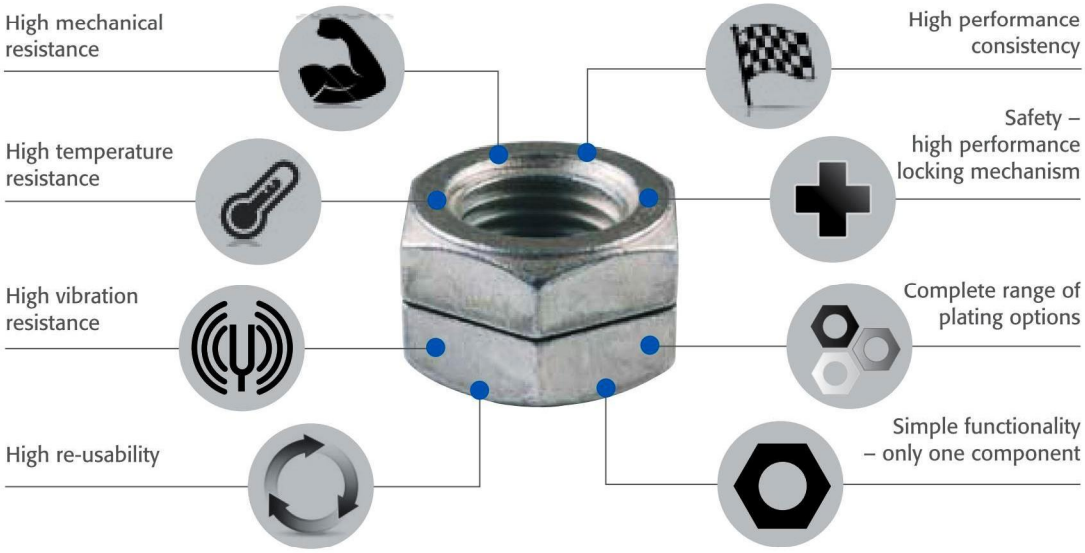

Principle mechanical function:
The self-locking function is obtained by an axial deformed slot.
The metal above the slot is set to de-pitch the threads so that when the nut is tightened on to a bolt, the thread is gripped on the flank.

Phone: +49 (0) 231 / 725 790 -0 EMail: info@hokon-verschlusstechnik.de
Fax: +49 (0) 231 / 725 790 -10 Homepage: www.hokon-verschlusstechnik.de

SNEP self locking nuts

ESN - H100

- Single locking slot – simple but incredibly effective
- Reversible: Locking slot at 1/2 nut height
- Re-usable up to 5 times with minimal performance loss (ISO2320)
- Class 6 & 8
- Suitable for automatic installation



ESN - H130

- Single locking slot – simple but incredibly effective
- Locking slot at 2/3 nut height
- Re-usable up to 5 times with minimal performance loss (ISO2320)
- Class 6, 8 & 10
- Made to ISO 7042 standard
- CF 00-040 European rail standard certified



The international Standard ISO 2320 determine functional properties for nuts with clamping parts. They are tested in an ambient temperature range of +10°C to +35°C. It contains a single test to determination of the clamping characteristics (functional properties) and/ or the torque-/ preload force characteristics.
The Norm applies to all-metal nuts with clamping parts in the temperature range of -50°C to +150°C.

Materials and coatings:

Steel grades 5.8	(zinc plated CrVI-free passivated)	R60
Steel grades 8.8	(zinc plated CrVI-free passivated)	R80
Stainless steel V2A	(Rm=700N/mm²) (against stainless steel grub)	2A-70
Stainless steel V4A	(Rm=800N/mm²) (against stainless steel grub)	4A-80

Ordering example:

Art.no. ESNH100 M5X80 R80Z

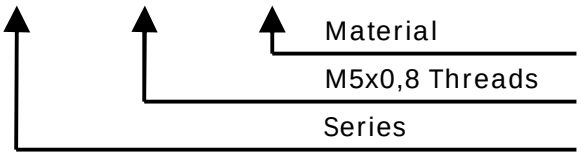

ESN H100/ Stainless steel V2A (against stainless steel grub)

Single slot- at 1/2 nut height

Threads	Article no.	Dimensions	
		Height	SW
M4	ESNH100M4X70A2	4	7
M5	ESNH100M5X80A2	5	8
M6	ESNH100M6X100A2	6	10
M8	ESNH100M8X125A2	8	13
M10	ESNH100M10X150A2	10	16
M12	ESNH100M12X175A2	12	18
M14	ESNH100M14X200A2	14	21
M16	ESNH100M16X200A2	16	24
M18	ESNH100M18X250A2	18	27
M20	ESNH100M20X250A2	20	30
M22	ESNH100M22X250A2	22	34
M24	ESNH100M24X300A2	24	36
M27	ESNH100M27X300A2	27	41



ESN H100/ Stainless steel V4A (against stainless steel grub)

Single slot- at 1/2 nut height

Gewinde	Artikel Nr.	Abmessungen	
		Höhe	SW
M4	ESNH100M4X70A4	4	7
M5	ESNH100M5X80A4	5	8
M6	ESNH100M6X100A4	6	10
M8	ESNH100M8X125A4	8	13
M10	ESNH100M10X150A4	10	16
M12	ESNH100M12X175A4	12	18
M14	ESNH100M14X200A4	14	21
M16	ESNH100M16X200A4	16	24
M18	ESNH100M18X250A4	18	27
M20	ESNH100M20X250A4	20	30
M22	ESNH100M22X250A4	22	34
M24	ESNH100M24X300A4	24	36
M27	ESNH100M27X300A4	27	41



ESN H100/ R60 (zinc plated CrVI-free passivated)

Single slot- at 1/2 nut height

Threads	Article no.	Dimensions	
		Height	SW
M5	ESNH100M5X80R60Z	5	8
M6	ESNH100M6X100R60	6	10
M8	ESNH100M8X125R60	8	13
M10	ESNH100M10X150R6	10	16
M12	ESNH100M12X175R6	12	18
M14	ESNH100M14X200R6	14	21
M16	ESNH100M16X200R6	16	24
M18	ESNH100M18X250R6	18	27
M20	ESNH100M20X250R6	20	30
M22	ESNH100M22X250R6	22	34
M24	ESNH100M24X300R6	24	36
M27	ESNH100M27X300R6	27	41



ESN H100/ R80 (zinc plated CrVI-free passivated)

Single slot- at 1/2 nut height

Threads	Article no.	Dimensions	
		Height	SW
M5	ESNH100M5X80R80Z	5	8
M6	ESNH100M6X100R80	6	10
M8	ESNH100M8X125R80	8	13
M10	ESNH100M10X150R8	10	16
M12	ESNH100M12X175R8	12	18
M14	ESNH100M14X200R8	14	21
M16	ESNH100M16X200R8	16	24
M18	ESNH100M18X250R8	18	27
M20	ESNH100M20X250R8	20	30
M22	ESNH100M22X250R8	22	34
M24	ESNH100M24X300R8	24	36
M27	ESNH100M27X300R8	27	41



ESN H130/ Stainless steel V2A (against stainless steel grub)

Single slot- at 2/3 nut height

Threads	Article no.	Dimensions	
		Height	SW
M4	ESNH130M4X70A2	5,2	7
M5	ESNH130M5X80A2	6,5	8
M6	ESNH130M6X100A2	7,8	10
M8	ESNH130M8X125A2	10,4	13
M10	ESNH130M10X150A2	13	16
M12	ESNH130M12X175A2	15,6	18
M14	ESNH130M14X200A2	18,2	21
M16	ESNH130M16X200A2	20,8	24
M18	ESNH130M18X250A2	23,4	27
M20	ESNH130M20X250A2	26	30
M22	ESNH130M22X250A2	28,6	34
M24	ESNH130M24X300A2	31,2	36
M27	ESNH130M27X300A2	35,1	41



Special sizes (M30-M80) on request.

ESN H130/ Stainless steel V4A (against stainless steel grub)

Single slot- at 2/3 nut height

Threads	Article no.	Dimensions	
		Height	SW
M4	ESNH130M4X70A4	5,2	7
M5	ESNH130M5X80A4	6,5	8
M6	ESNH130M6X100A4	7,8	10
M8	ESNH130M8X125A4	10,4	13
M10	ESNH130M10X150A4	13	16
M12	ESNH130M12X175A4	15,6	18
M14	ESNH130M14X200A4	18,2	21
M16	ESNH130M16X200A4	20,8	24
M18	ESNH130M18X250A4	23,4	27
M20	ESNH130M20X250A4	26	30
M22	ESNH130M22X250A4	28,6	34
M24	ESNH130M24X300A4	31,2	36
M27	ESNH130M27X300A4	35,1	41



ESN H130/ R60 (zinc plated CrVI-free passivated)

Single slot- at 2/3 nut height

Threads	Article no.	Dimensions	
		Height	SW
M5	ESNH130M5X80R60Z	6,5	8
M6	ESNH130M6X100R60	7,8	10
M8	ESNH130M8X125R60	10,4	13
M10	ESNH130M10X150R6	13	16
M12	ESNH130M12X175R6	15,6	18
M14	ESNH130M14X200R6	18,2	21
M16	ESNH130M16X200R6	20,8	24
M18	ESNH130M18X250R6	23,4	27
M20	ESNH130M20X250R6	26	30
M22	ESNH130M22X250R6	28,6	34
M24	ESNH130M24X300R6	31,2	36
M27	ESNH130M27X300R6	35,1	41



Special sizes (M30-M80) on request.

ESN H130/ R80 (zinc plated CrVI-free passivated)

Single slot- at 2/3 nut height

Threads	Article no.	Dimensions	
		Height	SW
M5	ESNH130M5X80R80Z	6,5	8
M6	ESNH130M6X100R80	7,8	10
M8	ESNH130M8X125R80	10,4	13
M10	ESNH130M10X150R8	13	16
M12	ESNH130M12X175R8	15,6	18
M14	ESNH130M14X200R8	18,2	21
M16	ESNH130M16X200R8	20,8	24
M18	ESNH130M18X250R8	23,4	27
M20	ESNH130M20X250R8	26	30
M22	ESNH130M22X250R8	28,6	34
M24	ESNH130M24X300R8	31,2	36
M27	ESNH130M27X300R8	35,1	41



Special sizes (M30-M80) on request.

HoKon

VERSCHLUSSTECHNIK &
SONDERKONSTRUKTIONEN

Zertifiziert nach DIN EN ISO 9001:2008



Suitcase corners

Edge protectors

Linchpins

Spring clips

TÜVRheinland
ZERTIFIZIERT

Management System
ISO 9001:2015
ISO 14001:2015

www.tuv.com
ID 9108624624



FOLDER 7 SUNDRIES

FOLDER 1 LATCHES

FOLDER 2 TENSION BANDS

FOLDER 3 HANDLES

FOLDER 4 HINGES

FOLDER 5 LOCKING DEVICES

FOLDER 6 THREADED INSERTS

FOLDER 7 SUNDRIES

SUITCASE CORNERS D-71
LINCH PINS, HOSE CLIPS AND R-CLIPS I-2
SPRING CLIPS K-1
EDGE PROTECTORS L-1
RUBBER BUMP ..... M

- RUBBER-METAL-BUFFER M-1
- SELF ADHESIVE RUBBER BUFFERS M-27

GENERAL TERMS AND CONDITIONS .....

Suitcase corners


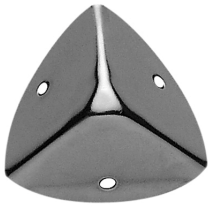















Suitcase Corners

„Sharp“ (drilled)

Article no.			Dimensions in mm	
Series	Execution	Material Nickel plated Steel	Size	Hole Ø
8001	.01	.01	20x20	2,5
	.02	.01	20x20	3,5
8005	.01	.01	27x27	2,5
	.02	.01	27x27	3,5
	.03	.01	27x27	4,0
	.04	.01	27x27	4,5
8010	.01	.01	32x32	3,5
	.02	.01	32x32	2,5
	.03	.01	32x32	4,25
8015	.01	.01	35x35	3,5
	.02	.01	35x35	4,25
8025	.01	.01	45x45	4,25

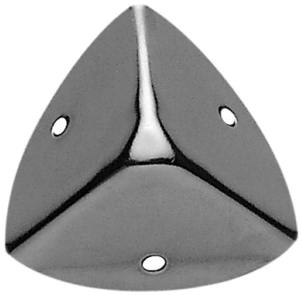

„Dulled“ (drilled)

Article no.			Dimensions in mm	
Series	Execution	Material Nickel plated Steel	Size	Hole Ø
8095	.01	.01	16x16	1,1
8030	.01	.01	20x20	2,5
	.02	.01	20x20	3,5
8035	.01	.01	27x27	2,5
	.02	.01	27x27	3,5
	.03	.01	27x27	4,0
	.04	.01	27x27	4,5
8040	.01	.01	32x32	3,5
	.02	.01	32x32	2,5
	.03	.01	32x32	4,25
8041	.01	.01	32x32	3,5
	.02	.01	32x32	2,5
	.03	.01	32x32	4,25
8045	.01	.01	35x35	4,25
8050	.01	.01	40x40	4,25
	.02	.01	40x40	5,5
8055	.01	.01	50x50	4,5



TÜVRheinland ZERTIFIZIERT
Management System
ISO 9001:2015
ISO 14001:2015
www.tuv.com ID 9108624624

Further materials and surface finishes on demand. We will be pleased to give you advice.
Phone: +49 (0) 231 / 725 790 -0 eMail: info@hokon-verschlusstechnik.de
Fax: +49 (0) 231 / 725 790 -10 Homepage: www.hokon-verschlusstechnik.de

Suitcase Corners

„Dulled“ (drilled)

Article no.			Dimensions in mm	
Series	Execution	Material Nickel plated Steel	Size	Hole Ø
8070	.01	.01	20x20	2,5
8085	.01	.01	32x32	3,5
8090	.01	.01	45x45	4,2



„Dulled“ (drilled)

Article no.			Dimensions in mm	
Series	Execution	Material Chromated Steel	Size	Hole Ø
8100	.01	.03	28x28	4,2
8105	.01	.03	32x32	4,2
8110	.01	.03	40x40	4,2



„Dulled“ (drilled)

Article no.			Dimensions in mm	
Series	Execution	Material Nickel plated Steel	Size	Hole Ø
8060	.01	.01	20x20	3,5
8060	.02	.01	20x20	2,5



„Dulled“ (drilled)

Article no.			Dimensions in mm	
Series	Execution	Material Nickel plated Steel	Size	Hole Ø
8065	.01	.01	20x20	2,5



„Dulled“ (drilled)

Article no.			Dimensions in mm	
Series	Execution	Material Nickel plated Steel	Size	Hole Ø
8075	.01	.01	28x28	2,5



Suitcase Corners

„Dulled“ (drilled)

Article no.			Dimensions in mm	
Series	Execution	Material Nickel plated Steel	Size	Hole Ø
8080	.01	.01	28x28	2,8



Art.no. 100.C1339z (drilled)

Article no.			Dimensions in mm	
Series	Execution	Material Zinc plated Steel	Size	Hole Ø
100.C1339z	.01	.04	65x65	5



Art.no. 100.C1339/01z (drilled)

Article no.			Dimensions in mm	
Series	Execution	Material Zinc plated Steel	Size	Hole Ø
100.C1339/01z	.01	.04	50x50	5



Art.no. 100.C1375 (drilled)

Article no.				Dimensions in mm	
Series	Execution	Material		Size	Hole Ø
		Zinc plated	Raw		
		Steel	Stainless steel		
100.C1375	.01	.04	.30	50x50	5



Art.no. 100.C0650 (drilled)

Article no.			Dimensions in mm	
Series	Execution	Material Zinc plated Steel	Size	Hole Ø
100.C0650	.01	.04	71,5x71,5	5



TÜVRheinland ZERTIFIZIERT
Management System ISO 9001:2015 ISO 14001:2015
www.tuv.com ID 9108624624

Further materials and surface finishes on demand. We will be pleased to give you advice.
Phone: +49 (0) 231 / 725 790 -0 eMail: info@hokon-verschlusstechnik.de
Fax: +49 (0) 231 / 725 790 -10 Homepage: www.hokon-verschlusstechnik.de

Suitcase Corners

Art.no. 100.C1352/00/R5 (drilled)

Article no.			Dimensions in mm	
Series	Execution	Material Zinc plated Steel	Size	Hole Ø
100.C1352/00/R5	.01	.04	50x50	5



Art.no. 100.C1079 (drilled)

Article no.			Dimensions in mm	
Series	Execution	Material Zinc plated Steel	Size	hole Ø
100.C1079	.01	.04	49,5x49,5	5



Art.no. 100.C1080 (drilled)

Article no.			Dimensions in mm	
Series	Execution	Material Zinc plated Steel	Size	Hole Ø
100.C1080	.01	.04	49,5x49,5	5



Art.no 100.C1081 (drilled)

Article no.			Dimensions in mm	
Series	Execution	Material Zinc plated Steel	Size	Hole Ø
100.C1081	.01	.04	49,5x49,5	5



Suitcase Corners

Art.no. 100.C1537 (drilled)

Article no.			Dimensions in mm	
Series	Execution	Material Plastic ABS	Size	Hole Ø
100.C1537	.01	.87	33x55	3,5



Art.no. 100.C1536 (drilled)

Article no.			Dimensions in mm	
Series	Execution	Material Plastic ABS	Size	Hole Ø
100.C1536	.01	.87	83x53	4



Art.no. 100.C1567 (drilled)

Article no.			Dimensions in mm	
Series	Execution	Material Plastic ABS	Size	Hole Ø
100.C1567	.01	.87	55x35	4



Art.no. 100.C1568 (drilled)

Article no.			Dimensions in mm	
Series	Execution	Material Plastic ABS	Size	ole Ø
100.C1568	.01	.87	83x53	4



TÜVRheinland ZERTIFIZIERT
Management System
ISO 9001:2015
ISO 14001:2015
www.tuv.com ID 9108624624

Further materials and surface finishes on demand. We will be pleased to give you advice.
Phone: +49 (0) 231 / 725 790 -0 eMail: info@hokon-verschlusstechnik.de
Fax: +49 (0) 231 / 725 790 -10 Homepage: www.hokon-verschlusstechnik.de

Linchpins



Hose clips



R-clip

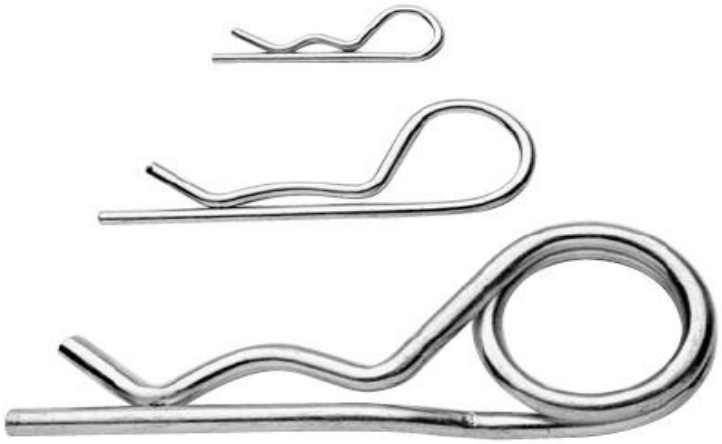

Linchpins, hose-clips and r-clips

Linchpins

Article no.		Dimensions in mm		
Series	Material Zinc plated Steel	Ø D	L	B
8120	.04	4,5	40	32,5
8121	.04	5,2	32	25,5
8122	.04	6	40	32,5
8123	.04	7	40	32,5
8124	.04	8	40	32,5
8127	.04	10	45	35
8128	.04	11	45	35
8129	.04	12	45	35

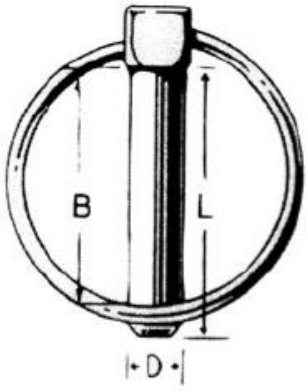

Hose clips

Article no.		Dimensions in mm		
Series	Material Zinc plated Steel	Tube Ø	Ø D	L
8130	.04	28	6,0	32
8131	.04	40	6,0	45
8132	.04	36	8,0	40
8133	.04	40	8,0	45
8134	.04	45	8,0	50
8135	.04	55	8,0	60
8136	.04	45	10,0	50
8137	.04	55	10,0	60

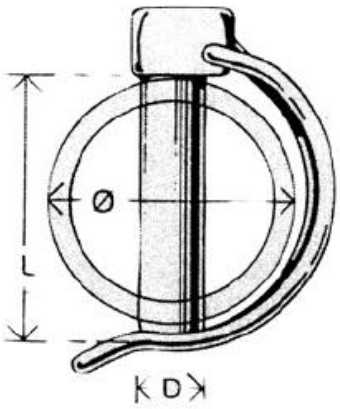

R-clip (simple)

Article no.			Dimensions in mm	
Series	Material		A	L
	Zinc plated Steel	Raw Stainless steel		
8102	.04	.30	2	41
8103	.04	.30	3	67
8104	.04	.30	4	75
8105	.04	.30	5	105
8106	.04	.30	6	117
8107	.04	.30	7	170
8108	.04	.30	8	155

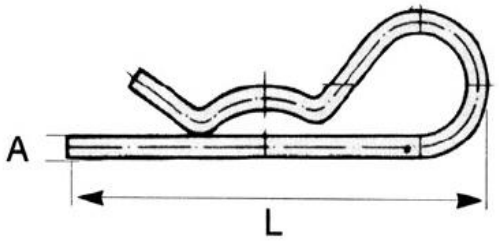

TÜVRheinland ZERTIFIZIERT
Management System ISO 9001:2015 ISO 14001:2015
www.tuv.com ID 9108624624

Further materials and surface finishes on demand. We will be pleased to give you advice.
Phone: +49 (0) 231 / 725 790 -0 eMail: info@hokon-verschlusstechnik.de
Fax: +49 (0) 231 / 725 790 -10 Homepage: www.hokon-verschlusstechnik.de

linchpins, hose-clips and r-clips

R-clip (double)

Article no.		Dimensions in mm	
Series	Material Zinc plated	A	L
8112	.04	2	56
8113	.04	3	73
8114	.04	4	98
8115	.04	5	111
8116	.04	6	142
8118	.04	8	152

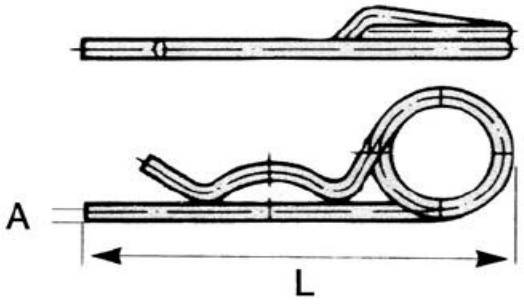

Linchpins, hose-clips and r-clips

TÜVRheinland ZERTIFIZIERT
Management System
ISO 9001:2015
ISO 14001:2015
www.tuv.com
ID 9108624624

Further materials and surface finishes on demand. We will be pleased to give you advice.
Phone: +49 (0) 231 / 725 790 -0 eMail: info@hokon-verschlusstechnik.de
Fax: +49 (0) 231 / 725 790 -10 Homepage: www.hokon-verschlusstechnik.de

Spring clips

Now in our program for you – high quality spring clips in different sizes.

The possible applications are extremely diverse: Holding applications for tools of all kinds, component fixtures inside of machines and switchboards, hose routing and safety, as well as effective and inexpensive locking alternatives for doors and valves. If in your workshop or in your product, our spring clips are extremely resilient:
They are made of high quality spring steel and their standard completion is NIROSTA.



Art. no.: GS-291

Spring clip drilled

Material and surface finish:

Raw stainless steel (1.4310)

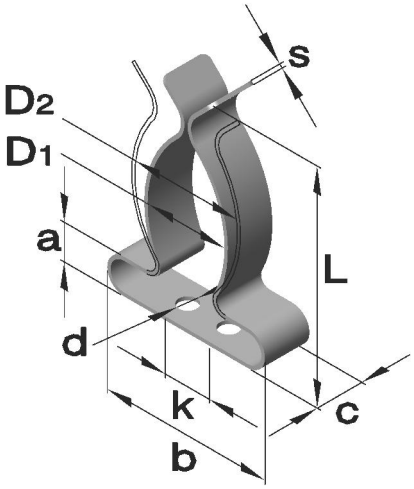

Article no.			Dimensions in mm										
Series	Execution	Material Stainless steel (Nirosta)	shaft Ø D	D1	D2	Ø d	a	b	c	L	s	k	Perforations count
GS-291	-1	-NI	6-8	5,0	8,0	3,1	4,0	13,0	6,0	17,0	0,5	-	1
GS-291	-2	-NI	9-10	6,5	11,0	3,1	5,0	16,0	6,0	21,0	0,5	-	1
GS-291	-3	-NI	11-14	10,0	15,0	3,1	5,0	23,0	8,0	27,0	0,5	-	1
GS-291	-4	-NI	15-18	14,0	19,0	3,1	5,5	26,0	8,0	30,3	0,5	-	1
GS-291	-5	-NI	18-22	15,0	23,0	4,1	6,0	26,5	8,0	39,0	0,5	-	1
GS-291	-6	-NI	23-26	19,0	27,0	4,1	6,5	30,0	8,0	43,0	0,6	-	1
GS-291	-6A	-NI	27-29	21,5	30,0	4,1	8,0	36,5	10,0	51,0	0,7	-	1
GS-291	-7	-NI	30-32	26,0	33,0	5,2	9,0	46,0	13,0	60,0	1,0	-	1
GS-291	-7A	-NI	33-39	30,0	40,0	5,2	10,0	49,5	13,0	64,0	1,0	9	2
GS-291	-8	-NI	39-45	31,0	45,0	5,2	9,0	48	13,0	68,0	1,0	9	2

Further materials and surface finishes on demand. We will be pleased to give you advice.

Phone: +49 (0) 231 / 725 790 -0
Fax: +49 (0) 231 / 725 790 -10
eMail: info@hokon-verschlusstechnik.de
Homepage: www.hokon-verschlusstechnik.de

Phone: +49 (0) 231 / 725 790 -0
Fax: +49 (0) 231 / 725 790 -10
eMail: info@hokon-verschlusstechnik.de
Homepage: www.hokon-verschlusstechnik.de

Edge protector



Edge protection profiles

HoKon
VERSCHLUSSTECHNIK &
SONDERKONSTRUKTIONEN

Our delivery program

Flexible edge protection-, Edge protection sealing profiles, Rubber clamping- and Filler profiles, Finger protection profiles, Flat gaskets, Silicon profiles, Alu- and Stainless steel profiles, Assembly, Socket profiles, Cushion profiles, Door sealing profiles, Air-profiles, assembled as a frame, Ring or fixed length, Sponge- and Cellular rubber profiles, PE-foam profiles, Cuttings and punched gaskets.

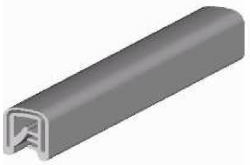	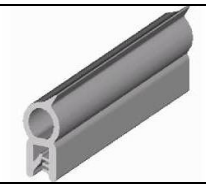	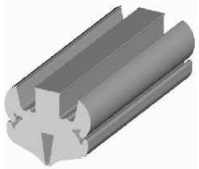
Edge protection profiles	Edge protection sealing profile	Clamp profiles
		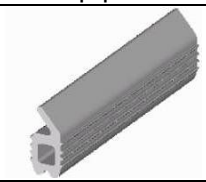
Finger protection profiles	Aluminium and stainless steel profile	Door sealing profile

Materials:
Natural rubber (NR)
Styrene butadiene rubber (SBR)
Ethylene propylene diene rubber (EPDM)
Silicone rubber (VMQ)
Chloroprene rubber (CR)
Nitrile butadiene rubber (NBR)
Fluorinated rubber (FKM, Viton)

Minimum bend radius for edge protection profiles

Please notice that all indicated minimum bend radius
(in the following charts) serve as a guideline,
depending on material, clamping range and application
purpose of the used profile.

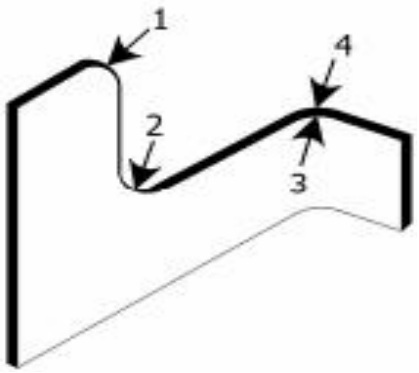

Manufacturing tolerances
PVC according to DIN 16941
Tolerances on fixed length, on indication

Flexible edge protection

Made of PVC
With steel spring filling

TÜVRheinland ZERTIFIZIERT Management System ISO 9001:2015 ISO 14001:2015 www.tuv.com ID 9108624624

Further materials and surface finishes on demand. We will be pleased to give you advice.
Phone: +49 (0) 231 / 725 790 -0 eMail: info@hokon-verschlusstechnik.de
Fax: +49 (0) 231 / 725 790 -10 Homepage: www.hokon-verschlusstechnik.de

Edge protection profiles

	Article no.	Material	Clamping range in mm	Bend radius in mm (see Page L-3)	VE
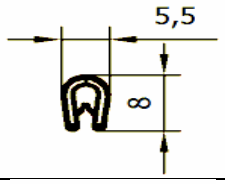	8316 0 220	PVC Black	0,8 – 1,5	1 = 10 2 = 10 3 = 10 4 = 10	10 m
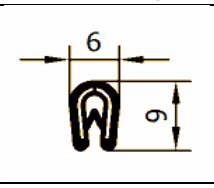	8316 0 440	PVC Black	1,0 – 1,8	1 = 10 2 = 10 3 = 10 4 = 10	100 m
	8316 0 520	PVC Black	1,0 – 1,8		100 m
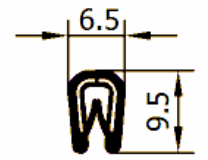	8316 0 620	PVC White	1,0 - 2,0	1 = 15 2 = 15 3 = 10 4 = 10	100 m
	8316 0 820	PVC Black	1,0 - 2,0		100 m
	8316 0 821	PVC Black	1,5 - 2,5		100 m
	8316 0 823	PVC Silver	1,0 - 2,0		100 m
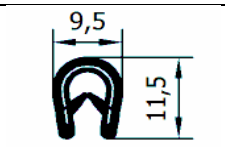	8316 0 221	PVC Black	1,0 – 2,5	1= 20 2= 20 3= 15 4= 15	100 m
	8316 0 222	PVC Black	2,0 – 4,0		100 m
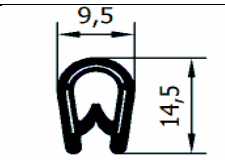	8316 0 320	PVC Black	1,0 - 4,0	1= 30 2= 20 3= 20 4= 20	100 m
	8316 0 720	PVC Anthrazit	1,0 - 4,0		100 m
	8316 0 920	PVC light grey	1,0 - 4,0		100 m
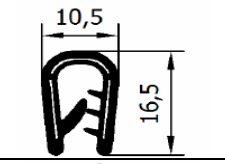	8316 0 135	PVC Black	1,0 - 2,5	1= 50 2= 40 3= 30 4= 30	100 m
	8316 0 136	PVC Black	2,0 - 4,0		100 m
	831600137	PVC Black	4,0 - 6,0		100 m
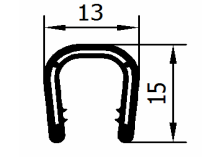	8316 0 740	PVC light grey	6,0 - 8,0	1= 40 2= 40 3= 40 4= 40	100 m
	8316 0 741	PVC Black	6,0 - 8,0		100 m
	8316 0 742	PVC Black	8,0 - 10,0		100 m

Edge protection profiles

Flexible edge protection profiles

With steel spring filling
With sealed on foam rubber EPDM

	Article no.	Material	Clamping range in mm	Bend radius in mm (see Page L-3)	VE
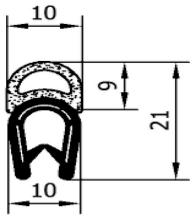	8316 0 840	PVC Black / EPDM Black	1,0 - 4,0	1= 70 2= 80 3= 15 4= 15	50 m
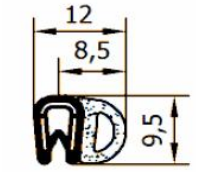	8316 0 950	PVC Black (70° ± 5°) Shore A / EPDM Black	1,0 - 2,0	1= 20 2= 15 3= 30 4= 50	10 m (Roll 100 m)
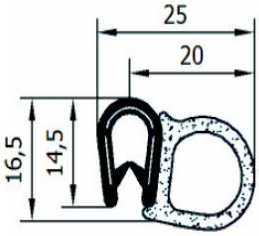	8316 0 150	PVC Black (70° ± 5°) Shore A / EPDM Black	1,0 - 4,0	1= 50 2= 30 3= 100 4= 120	5 m (Roll 50 m)
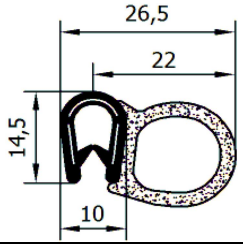	8316 0 153	PVC Black / EPDM Black	1,0 - 4,0	1= 50 2= 30 3= 100 4= 120	50 m
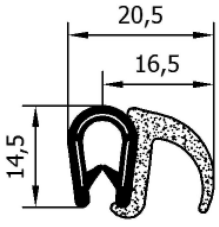	8316 0 640	PVC Black / EPDM Black	1,0 - 4,0	1= 50 2= 30 3= 100 4= 120	50 m

TÜVRheinland ZERTIFIZIERT Management System ISO 9001:2015 ISO 14001:2015 www.tuv.com ID 9108624624

Further materials and surface finishes on demand. We will be pleased to give you advice.
Phone: +49 (0) 231 / 725 790 -0 eMail: info@hokon-verschlusstechnik.de
Fax: +49 (0) 231 / 725 790 -10 Homepage: www.hokon-verschlusstechnik.de

Edge protection profiles

Flexible edge protection and seal profiles

With steel spring filling
With sealed on foam rubber EPDM/NBR

	Article no.	Material	Clamping range in mm	Bend radius in mm (see Page L-3)	VE
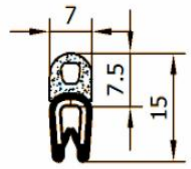	8316 0 960	PVC Black (70° ± 5°) Shore A / EPDM Black	1,0 - 2,0	1= 20 2= 40 3= 10 4= 10	10 m (Roll 100 m)
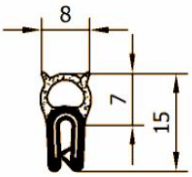	8316 0 003	PVC Black / EPDM Black soft	0,5 - 1,5	1= 50 2= 80 3= 25 4= 25	50 m
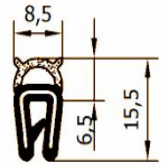	8316 0 005	EPDM Black (65° ± 5°) Shore A / EPDM Black soft	0,8 - 2,0	1= 50 2= 60 3= 20 4= 20	5 m (Roll 50 m)
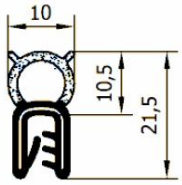	8316 0 010	EPDM Black (65° ± 5°) Shore A / EPDM Black soft	1,0 - 3,5	1= 50 2= 180 3= 30 4= 30	5 m (Roll 50 m)
	8316 0 010-1	NBR Black (60° ± 5°) Shore A / NBR Black	3,0 - 5,0	1= 50 2= 150 3= 50 4= 50	5 m (Roll 50 m)
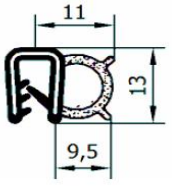	8316 0 025	EPDM Black (65° ± 5°) Shore A / EPDM Black soft	1,0 - 3,5	1= 50 2= 20 3= 120 4= 40	5 m (Roll 50 m)
	8316 0 026	NBR schwarz (60° ± 5°) Shore A / NBR Black	1,0 - 3,5		5 m (Roll 50 m)
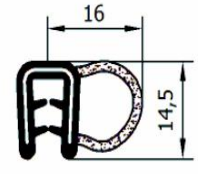	8316 0 040	PVC Black / EPDM Black soft	1,0 - 3,0	1= 40 2= 30 3= 180 4= 40	50 m
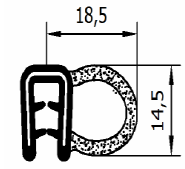	8316 0 060	PVC Black / EPDM Black soft	1,5 - 3,0	1= 80 2= 60 3= 200 4= 80	25 m

Edge protection profiles

Flexible edge protection and seal profiles

With steel spring filling
With sealed on foam rubber

	Article no.	Material	Clamping range in mm	Bend radius in mm (see Page L-3)	VE
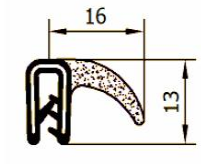	8316 0 045	EPDM Black (65° ± 5°) Shore A / EPDM Black	1,0 - 2,5	1= 80 2= 40 3= 200 4= 200	5 m (Roll 50 m)
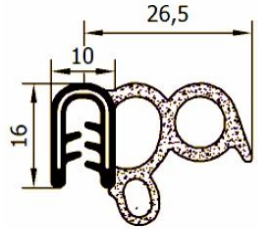	8316 0 065	PVC Black / EPDM Black soft	1,0 - 3,5	1= 40 2= 30 3= 180 4= 40	50 m
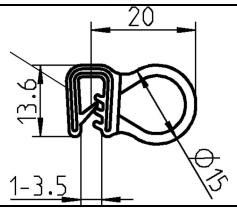	83160060-1	EPDM Black (65° ± 5°) Shore A / EPDM Black	1 – 3,5	1= 50 2= 40 3= 200 4= 50	5 m (Roll 50 m)

Edge protection and seal profiles

With metal insert
FDA- conformal

	Article no.	Material	Clamping range in mm	VE
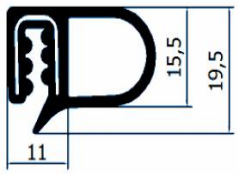	8316 9 158	Silicon	2,0	50 m

TÜVRheinland ZERTIFIZIERT Management System ISO 9001:2015 ISO 14001:2015 www.tuv.com ID 9108624624

Further materials and surface finishes on demand. We will be pleased to give you advice.
Phone: +49 (0) 231 / 725 790 -0 eMail: info@hokon-verschlusstechnik.de
Fax: +49 (0) 231 / 725 790 -10 Homepage: www.hokon-verschlusstechnik.de

Edge protection profiles

Finger protection profiles

Made of rubber EPDM

	Article no.	Material	VE
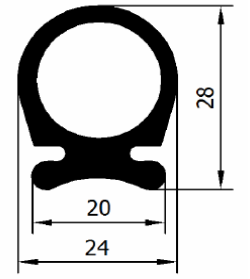	8330 0 140	Rubber EPDM Black	30 m
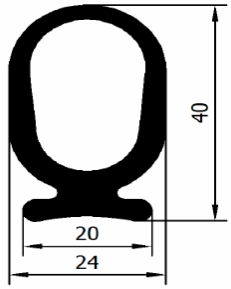	8330 0 080	Rubber EPDM Black	30 m
  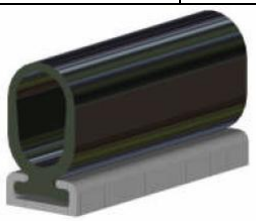			

Aluminiumprofile

Suitable for:
Art. no. 8330 0 140
Art. no. 8330 0 080

	Article no.	Material	Length	VE
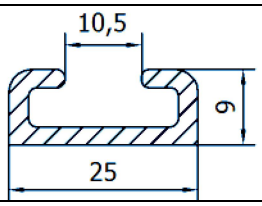	8101 0 020	Aluminium	5000 mm	50 m

Edge protection profiles

Seal profiles

Made of EPDM

	Artikel Nr.	Material	Clamping range in mm	Bend radius in mm (see Page L-3)	VE
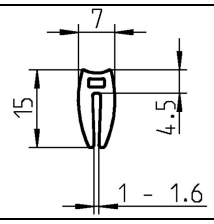	83300004-1	EPDM Black	1 - 1,6	-	5 m (Roll 50 m)
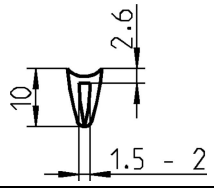	83300004-2	EPDM Black	1,5 - 2	1= 80 2= 30 3= 10 4= 10	5 m (Roll 50 m)

Door sealing profiles

Different quality on request.

	H in mm	h in mm	AH in mm	Article no.	Material	VE
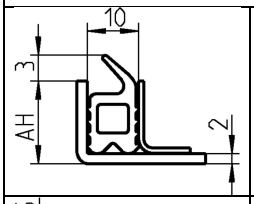 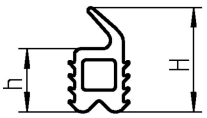	21	13,5	20	83030570-1	EPDM 55° Shore A Black	5 m (Roll 50 m)
	27	19,5	26	83030270-1		
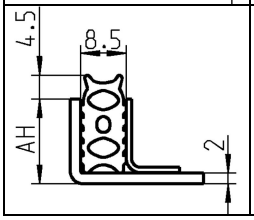 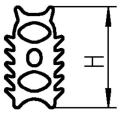	26,5	-	24	83030770-1	Sponge rubber EPDM 25° Shore A Black	5 m (Roll 50 m)

TÜVRheinland ZERTIFIZIERT Management System ISO 9001:2015 ISO 14001:2015 www.tuv.com ID 9108624624

Further materials and surface finishes on demand. We will be pleased to give you advice.
Phone: +49 (0) 231 / 725 790 -0 eMail: info@hokon-verschlusstechnik.de
Fax: +49 (0) 231 / 725 790 -10 Homepage: www.hokon-verschlusstechnik.de

Edge protection profiles

Sponge rubber-square and rectangle profiles

Made of EPDM, or CR
NBR on request

	b x h in mm	Artikel Nr. Werkstoff EPDM schwarz	EPDM hellgrau	CR schwarz	VE
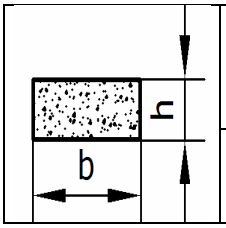	10 x 2	8313 2 0100	8313 2 0500	8313 3 0100	100 m

Viton-Caoutchouc, round-, square- and rectangle profiles

Made of FKM (Fluorkautschuk).
Hardness 75 ± 5 ° Shore A
Different dimensions on request.

	b x h in mm	Article no.	Material
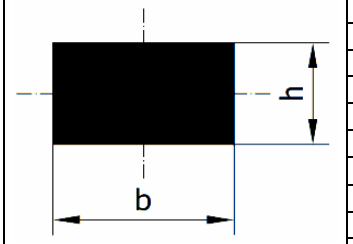	5 x 2	8382 9 200	FKM Black
	10 x 2	8382 9 201	FKM Black
	10 x 5	8382 9 202	FKM Black
	12 x 5	8382 9 203	FKM Black
	15 x 3	8382 9 204	FKM Black
	15 x 5	8382 9 205	FKM Black
	15 x 10	8382 9 206	FKM Black
	20 x 2	8382 9 207	FKM Black
	20 x 5	8382 9 208	FKM Black
	20 x 10	8382 9 209	FKM Black
	20 x 12	8382 9 210	FKM Black

Viton-Caoutchouc –special profiles

FKM (Fluorkautschuk)
Hardness 75 ± 5 ° Shore A

	Article no.	Material	VE
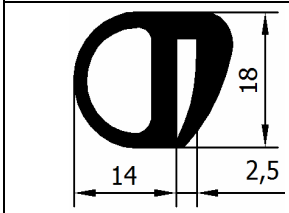	8382 9 311	FKM (Fluorkautschuk)	25 m
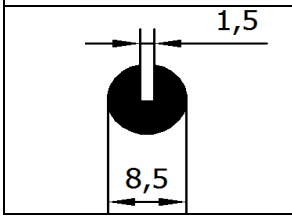	8382 9 313	FKM (Fluorkautschuk)	100 m

Edge protection profiles

Socket profiles

Made of EPDM or NBR

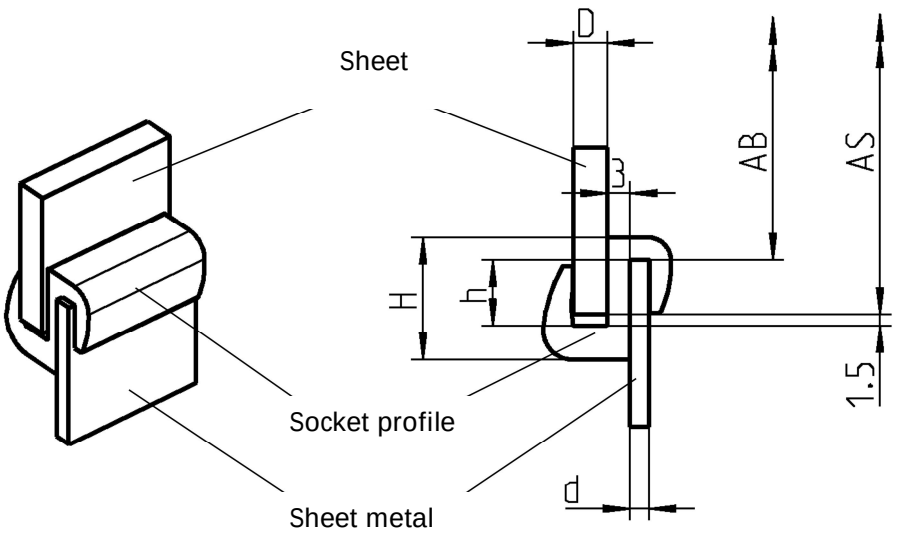

Article no.	Material		Dimensions				Bend radius in mm	VE
	Black	Black	D	d	H	h		
838 0 9456-1	EPDM 60° Shore A	-	4	2	16,2	8,7	≥ 40	5 m (Roll 50 m)
838 0 9456-2	EPDM 60° Shore A	-	6	2	16,2	8,7	≥ 40	5 m (Roll 50 m)
838 0 9456-3	-	NBR 80° Shore A	4	2	16,2	8,7	≥ 40	5 m (Roll 50 m)
838 0 9456-4	-	NBR 80° Shore A	6	2	16,2	8,7	≥ 40	5 m (Roll 50 m)

AB + 14,5 mm = AS

TÜVRheinland ZERTIFIZIERT Management System ISO 9001:2015 ISO 14001:2015 www.tuv.com ID 9108624624

Further materials and surface finishes on demand. We will be pleased to give you advice.
Phone: +49 (0) 231 / 725 790 -0 eMail: info@hokon-verschlusstechnik.de
Fax: +49 (0) 231 / 725 790 -10 Homepage: www.hokon-verschlusstechnik.de

Rubber-metal-buffers



Rubber-metal-buffers

Our delivery program:

1. Rubber-buffer-program
2. Rubber-moulded parts according to drawing
3. Rubber-metal-moulded parts according to drawing
4. Metalparts chromated
5. Metalparts galvanized
6. Metalparts powder-coated
8. Thread lengths can be manufactured differently from the regular program
7. Metalparts V2a
9. Rubber hardness from 35° to 90° shore
10. Sundry Rubbermaterials are possible

Technical modifications and errors excepted

Index:

Rubber-metal-buffers, Typ A	Page M-5 – M-6
Rubber-metal-buffers, Typ B	Page M-7 – M-8
Rubber-metal-buffers, Typ C	Page M-9 – M-10
Rubber-metal-buffers, Typ D	Page M-11 – M-12
Rubber-metal-buffers, Typ E	Page M-13 – M-14
Rubber-metal-buffers, Typ ES	Page M-14
Rubber-metal-buffers, Typ DS	Page M-15
Rubber-metal-buffers, Typ K	Page M-15
Rubber-metal-buffers, Typ TA	Page M-16
Rubber-metal-buffers, Typ TB	Page M-16
Rubber-metal-buffers, Typ TC	Page M-17
Rubber-metal-buffers, Typ P	Page M-17
Rubber-metal-buffers, Typ Crane bump stop	Page M-18
Rubber-metal-buffers, Typ KE	Page M-18
Rubber-metal-buffers, TypKV	Page M-18
Rubber-metal-Maschine feed	Page M-19 – M-20
Rubber-metal-Cone bearings	Page M-20
Rubber-metal-Clip-elements	Page M-21
Rubber-metal-Flange-elements	Page M-21
Rubber-metal-Hat-elements	Page M-21
Rubber-metal-Ring-Elemente	Page M-22
Rubber-metal-Sprong washers	Page M-22
Rubber-metal-Puffer, Gear-cushion	Page M-22
Maximum loads und springe rates	Page M-23-M-24
Material overview	Page M-25

Ordering example:

Art.no. H – 01 – 06 06

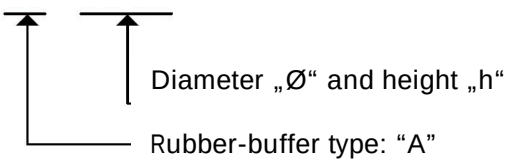

TÜVRheinland ZERTIFIZIERT
Management System
ISO 9001:2015
ISO 14001:2015
www.tuv.com ID 9108624624

Further materials and surface finishes on demand. We will be pleased to give you advice.
Phone: +49 (0) 231 / 725 790 -0 eMail: info@hokon-verschlusstechnik.de
Fax: +49 (0) 231 / 725 790 -10 Homepage: www.hokon-verschlusstechnik.de

HoKon
VERSCHLUSSTECHNIK &
SONDERKONSTRUKTIONEN

Rubber-metal-buffer

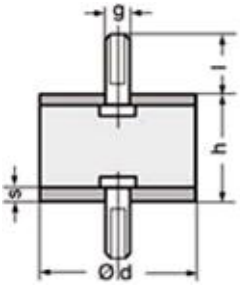

Typ “A“

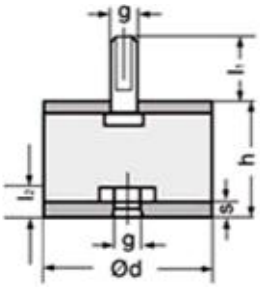

Typ “B“

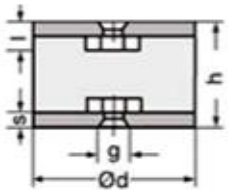

Typ “C“

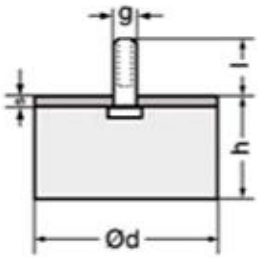

Type “D“

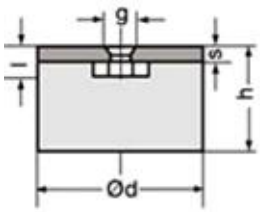

Type “E“

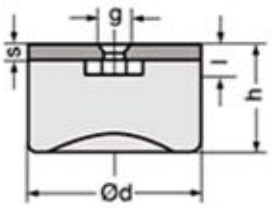

Type “ES“

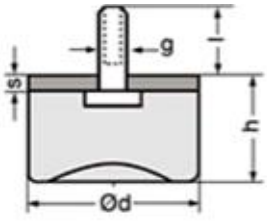

Type “DS“

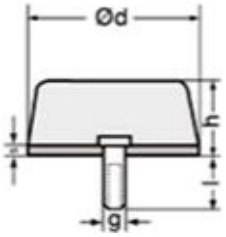

Type “K“
conical

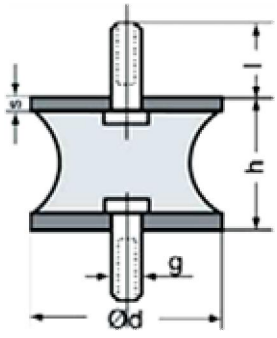

Type “TA“
waisted

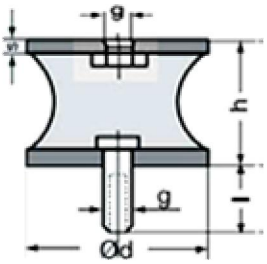

Type “TB“
waisted

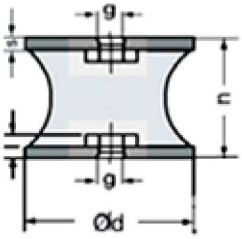

Type “TC“
waisted

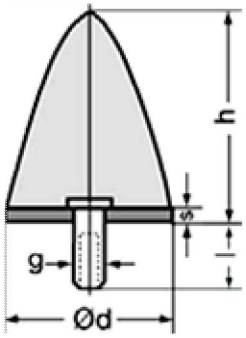

Type “P“
parabolic

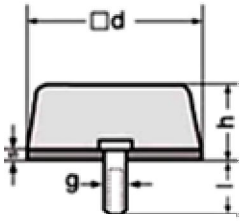

Type “KV“
conical-square

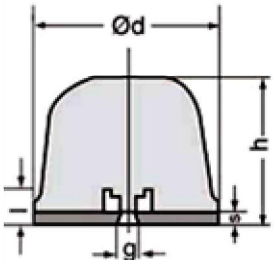

Type “KE“

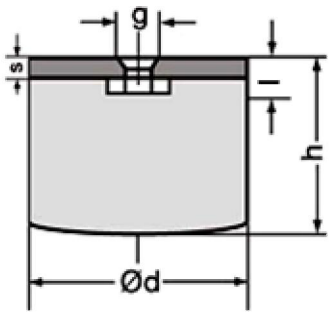

„Crane-bump stop“

Rubber-metal-buffer

Rubber-metal-elements

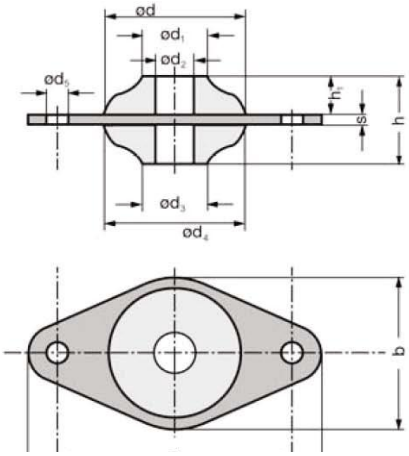

„Flange-elements“

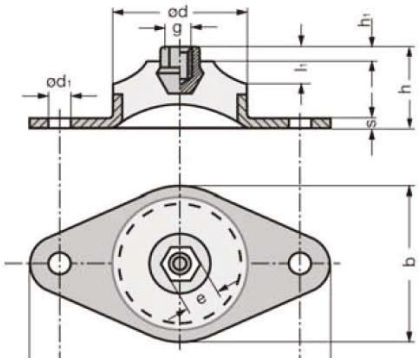

„Hat-elements“

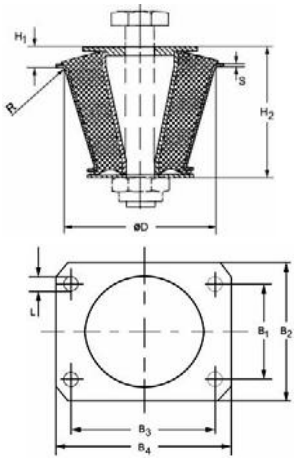

„Cone bearings“

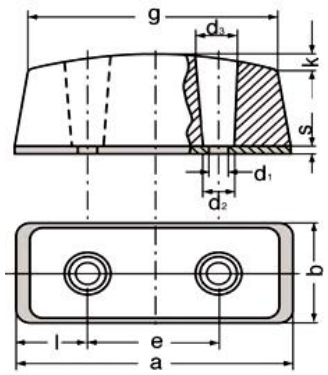

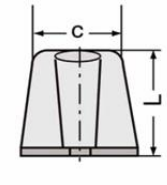

„Gear-cushion“

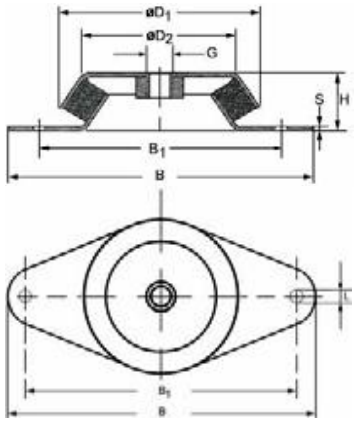

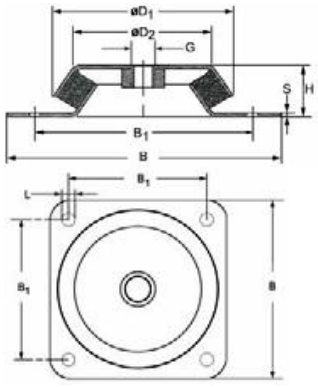

„Maschine feed“

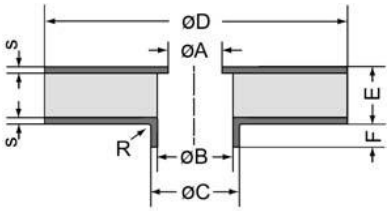

„Ring-elements“

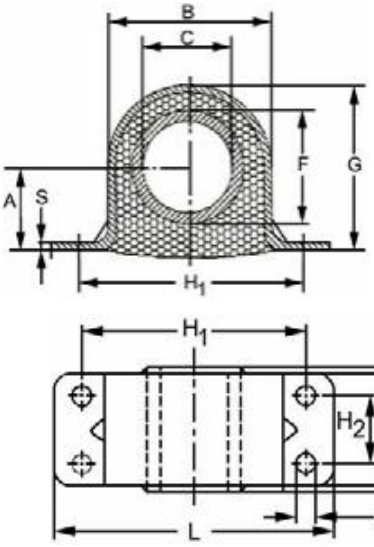

„Clip-elements“

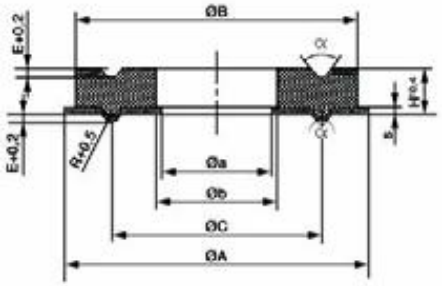

„Spring washers“

TÜVRheinland ZERTIFIZIERT
Management System ISO 9001:2015 ISO 14001:2015
www.tuv.com ID 9108624624

Further materials and surface finishes on demand. We will be pleased to give you advice.
Phone: +49 (0) 231 / 725 790 -0 eMail: info@hokon-verschlusstechnik.de
Fax: +49 (0) 231 / 725 790 -10 Homepage: www.hokon-verschlusstechnik.de

Rubber-metal-buffer

HoKon
VERSCHLUSSTECHNIK &
SONDERKONSTRUKTIONEN

Rubber-metal-buffer, Type “A“
With threaded bolt, duplex

Natural rubber in 55° shore -"intermediate"
On request also available 45º, 65º, 70º Shore



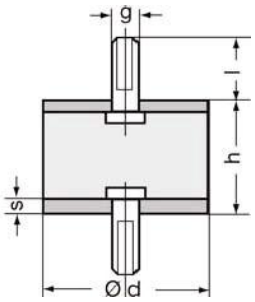

Article no.	Dimensions in mm				
	Ø d	h	g	l	S
H-01-0808	8	8	M3	6	2
H-01-01010	10	10	M4	11	2
H-01-01015	10	15	M4	12	2
H-01-01021	10	21	M4	11	2
H-01-01310	13	10	M4	12	2
H-01-01508	15	8	M4	12	2
H-01-01510	15	10	M4	12	2
H-01-01515	15	15	M4	12	2
H-01-01520	15	20	M4	12	2
H-01-01530	15	30	M4	12	2
H-01-018/8,5	18	8,5	M4	18	2
H-01-01810	18	10	M4	18	2
H-01-02008	20	8	M6	18	2,5
H-01-02010	20	10	M6	18	2,5
H-01-02012	20	12	M6	18	2,5
H-01-02015	20	15	M6	18	2,5
H-01-02020	20	20	M6	18	2,5
H-01-02025	20	25	M6	18	2,5
H-01-02510	25	10	M6	18	2,5
H-01-02515	25	15	M6	18	2,5
H-01-02520	25	20	M6	18	2,5

Article no.	Dimensions in mm				
	Ø d	h	g	l	S
H-01-02525	25	25	M6	18	2,5
H-01-02530	25	30	M6	18	2,5
H-01-03012	30	12	M8	23	2,5
H-01-03015	30	15	M8	23	2,5
H-01-03020	30	20	M8	23	2,5
H-01-03025	30	25	M8	23	2,5
H-01-03030	30	30	M8	23	2,5
H-01-03040	30	40	M8	23	2,5
H-01-03516	35	16	M8	23	2,5
H-01-04008	40	8	M8	23	2,5
H-01-04015	40	15	M8	23	2,5
H-01-04020	40	20	M8	23	2,5
H-01-04025-M8	40	25	M8	23	2,5
H-01-04025-M10	40	25	M10	20	2,5
H-01-04030	40	30	M8	23	2,5
H-01-04030-M10	40	30	M10	23	2,5
H-01-04035	40	35	M8	23	2,5
H-01-04040	40	40	M8	23	2,5
H-01-04050	40	50	M8	23	2,5

Rubber-metal-buffer

HoKon
VERSCHLUSSTECHNIK &
SONDERKONSTRUKTIONEN

Rubber-metal-buffer, Type “A“
With threaded bolt, duplex

Natural rubber in 55° shore -"intermediate"
On request also available 45º, 65º, 70º Shore



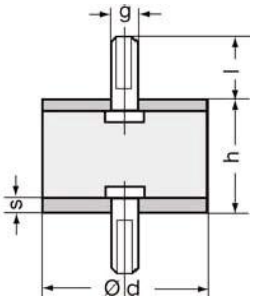

Article no.	Dimensions in mm				
	Ø d	h	g	l	S
H-01-05015	50	15	M10	28	2,5
H-01-05017	50	17	M10	28	2,5
H-01-05020	50	20	M10	28	2,5
H-01-05025	50	25	M10	28	2,5
H-01-05030	50	30	M10	28	2,5
H-01-05040	50	40	M10	28	2,5
H-01-05045	50	45	M10	28	2,5
H-01-05050	50	50	M10	28	2,5
H-01-05080	50	80	M10	28	2,5
H-01-06020-M10	60	20	M10	28	2,5
H-01-06020-M12	60	20	M12	37	2,5
H-01-06030-M10	60	30	M10	28	2,5
H-01-06030-M12	60	30	M12	37	2,5
H-01-06040-M10	60	40	M10	28	2,5
H-01-06040-M12	60	40	M12	37	2,5
H-01-06050	60	50	M10	28	2,5
H-01-06060-M10	60	60	M10	28	2,5
H-01-06560	65	60	M10	28	2,5
H-01-07030	70	30	M10	28	2,5
H-01-07040-M10	70	40	M10	28	2,5
H-01-07045-M10	70	45	M10	28	2,5
H-01-07045-M12	70	45	M12	37	2,5
H-01-07050	70	50	M10	28	2,5
H-01-07055	70	55	M10	28	2,5
H-01-07060	70	60	M10	28	2,5
H-01-07525	75	25	M12	37	2,5
H-01-07530	75	30	M12	37	2,5
H-01-07540	75	40	M12	37	2,5

Article no.	Dimensions in mm				
	Ø d	h	g	l	S
H-01-07545	75	45	M12	37	2,5
H-01-07550	75	50	M12	37	2,5
H-01-07555	75	55	M12	37	2,5
H-01-07560	75	60	M12	37	2,5
H-01-07570	75	70	M12	37	2,5
H-01-07575	75	75	M12	37	2,5
H-01-08030	80	30	M12	37	2,5
H-01-08040	80	40	M12	37	2,5
H-01-08585	85	85	M16	43	2,5
H-01-10040	100	40	M16	43	3
H-01-10050	100	50	M16	43	3
H-01-10055	100	55	M16	43	3
H-01-10060	100	60	M16	43	3
H-01-10075	100	75	M16	43	3
H-01-12575	125	75	M16	43	4
H-01-15050	150	50	M16	43	4
H-01-15055	150	55	M16	43	4
H-01-15075	150	75	M16	43	4
H-01-150100	150	100	M16	43	4
H-01-200100	200	100	M20	45	6

TÜVRheinland ZERTIFIZIERT
Management System
ISO 9001:2015
ISO 14001:2015
www.tuv.com ID 9108624624

Further materials and surface finishes on demand. We will be pleased to give you advice.
Phone: +49 (0) 231 / 725 790 -0
Fax: +49 (0) 231 / 725 790 -10
eMail: info@hokon-verschlusstechnik.de
Homepage: www.hokon-verschlusstechnik.de

Rubber-metal-buffer

Rubber-metal-buffer, Type “B”
With threaded bolt on the one hand,
internal thread on the other hand

Natural rubber in 55° shore -"intermediate"
On request also available 45º, 65º, 70º Shore



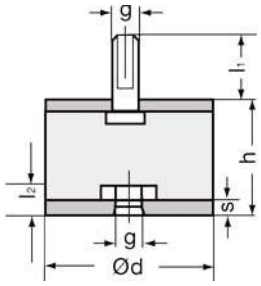

Article no.	Dimensions in mm					
	Ø d	h	g	l1	l2	s
H-02-0607	6	7	M3	6	3	2
H-02-0808	8	8	M3	6	3	2
H-02-01008	10	8	M4	10	4	2
H-02-01010	10	10	M4	10	4	2
H-02-01015	10	15	M4	10	4	2
H-02-01020	10	20	M4	10	4	2
H-01310	13	10	M4	10	4	2
H-02-01508	15	8	M4	10	4	2
H-02-01510	15	10	M4	10	4	2
H-02-01512	15	12	M4	10	4	2
H-02-01515	15	25	M4	10	4	2
H-02-01520	15	20	M4	10	4	2
H-02-01525	15	25	M4	11	4	2
H-02-01530	15	30	M4	10	4	2
H-02-02015	20	15	M6	18	6	2,5
H-02-02020	20	20	M6	18	6	2,5
H-02-02025	20	25	M6	18	6	2,5
H-02-02030	20	30	M6	18	6	2,5
H-02-02515	25	15	M6	18	6	2,5
H-02-02520	25	20	M6	18	6	2,5
H-02-02525	25	25	M6	18	6	2,5
H-02-02530	25	30	M6	18	6	2,5
H-02-02535	25	35	M6	18	6	2,5
H-02-02540	25	40	M6	18	6	2,5
H-02-03015	30	15	M8	23	8	2,5
H-02-03020	30	20	M8	23	8	2,5
H-02-03025	30	25	M8	23	8	2,5
H-02-03030	30	30	M8	23	8	2,5
H-02-03040	30	40	M8	23	8	2,5
H-02-03045	30	45	M8	23	8	2,5
H-02-03085	30	85	M8	23	8	2,5

Article no.	Dimensions in mm					
	Ø d	h	g	l1	l2	S
H-02-04020	40	20	M8	23	8	2,5
H-02-04020-M10	40	20	M10	28	10	2,5
H-02-04025-M8	40	25	M8	23	8	2,5
H-02-04035	40	35	M8	23	8	2,5
H-02-04040	40	40	M8	23	8	2,5
H-02-04045	40	45	M8	23	8	2,5
H-02-04550	45	50	M8	23	8	2,5
H-02-05020	50	20	M10	28	10	2,5
H-02-05025	50	25	M10	28	10	2,5
H-02-05030	50	30	M10	28	10	2,5
H-02-05040	50	40	M10	28	10	2,5
H-02-05045	50	45	M10	28	10	2,5
H-02-05050	50	50	M10	28	10	2,5
H-02-05055	50	55	M10	28	10	2,5
H-02-05080	50	80	M10	28	10	2,5
H-02-06030	60	30	M10	28	10	2,5
H-02-06030-M12	60	30	M12	37	12	2,5
H-02-06040	60	40	M10	28	10	2,5
H-02-06040-M12	60	40	M12	37	12	2,5
H-02-06045	60	45	M10	28	10	2,5
H-02-06045 –M12	60	45	M12	37	12	2,5
H-02-06050	60	50	M10	28	10	2,5
H-02-06050-M12	60	50	M12	37	12	2,5
H-02-06060	60	60	M10	28	10	2,5
H-02-06060-M12	60	60	M12	37	12	2,5

Rubber-metal-buffer

Rubber-metal-buffer, Type “B”
With threaded bolt on the one hand,
internal thread on the other hand

Natural rubber in 55° shore -"intermediate"
On request also available 45º, 65º, 70º Shore



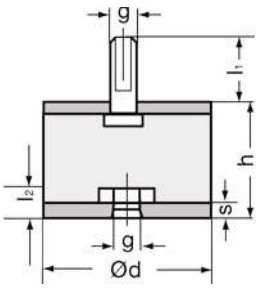

Article no.	Dimensions in mm					
	Ø d	h	g	l1	l2	s
H-02-07030	70	30	M10	28	10	2,5
H-02-07040	70	40	M10	28	10	2,5
H-02-07040-M12	70	40	M12	37	12	2,5
H-02-07045	70	45	M10	28	10	2,5
H-02-07045-M12	70	45	M12	37	12	2,5
H-02-07050	70	50	M10	28	10	2,5
H-02-07055	70	55	M10	28	10	2,5
H-02-07055-M12	70	55	M12	37	12	2,5
H-02-07525	75	25	M12	37	12	2,5
H-02-07530	75	30	M12	37	12	2,5
H-02-07540	75	40	M12	37	12	2,5
H-02-07545	75	45	M12	37	12	2,5
H-02-07550	75	50	M12	37	12	2,5
H-02-07555	75	55	M12	37	12	2,5
H-02-07570	75	70	M12	37	12	2,5
H-02-08030	80	30	M12	37	12	2,5
H-02-08040	80	40	M12	37	12	2,5
H-02-08585	85	85	M12	37	12	2,5
H-02-10040	100	40	M16	43	16	2,5
H-02-10050	100	50	M16	43	16	2,5
H-02-10055	100	55	M16	43	16	2,5
H-02-10060	100	60	M16	43	16	2,5
H-02-10075	100	75	M16	43	16	2,5
H-02-10090	100	90	M16	43	16	2,5

Article no.	Dimensions in mm					
	Ø d	h	g	l1	l2	S
H-02-12570	125	70	M16	43	16	2,5
H-02-12575	125	75	M16	43	16	2,5
H-02-125100	125	100	M16	43	16	2,5
H-02-15050	150	50	M16	43	16	2,5
H-02-15055	150	55	M16	43	16	2,5
H-02-15075	150	75	M16	43	16	2,5
H-02-150150	150	150	M16	43	16	2,5
H-02-150200	150	200	M16	43	16	2,5
H-02-200100	200	100	M20	45	20	2,5
H-02-200250	200	250	M20	45	20	2,5

TÜVRheinland ZERTIFIZIERT
Management System ISO 9001:2015 ISO 14001:2015
www.tuv.com ID 9108624624

Further materials and surface finishes on demand. We will be pleased to give you advice.
Phone: +49 (0) 231 / 725 790 -0 eMail: info@hokon-verschlusstechnik.de
Fax: +49 (0) 231 / 725 790 -10 Homepage: www.hokon-verschlusstechnik.de

Rubber-metal-buffer

Rubber-metal-buffer, Type "C"
With internal thread, duplex

Natural rubber in 55° shore -"intermediate"
On request also available 45º, 65º, 70º Shore



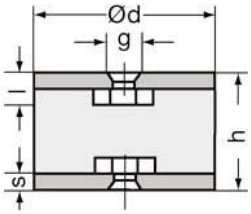

Article no.	Dimensions in mm				
	Ø d	h	g	l	S
H-03-0808	8	8	M3	3	2
H-03-01010	10	10	M4	4	2
H-03-01015	10	15	M4	4	2
H-03-01020	10	20	M4	4	2
H-03-01510	15	10	M4	4	2
H-03-01515	15	15	M4	4	2
H-03-01520	15	20	M4	4	2
H-03-01525	15	25	M4	4	2
H-03-02015	20	15	M6	6	2,5
H-03-02020	20	20	M6	6	2,5
H-03-02025	20	25	M6	6	2,5
H-03-02030	20	30	M6	6	2,5
H-03-02520	25	20	M6	6	2,5
H-03-02525	25	25	M6	6	2,5
H-03-02530	25	30	M6	6	2,5
H-03-02540	25	40	M6	6	2,5
H-03-03020	30	20	M8	8	2,5
H-03-03025	30	25	M8	8	2,5
H-03-03030	30	30	M8	8	2,5
H-03-03040	30	40	M8	8	2,5
H-03-04020-M8	40	20	M8	8	2,5
H-03-04025-M8	40	25	M8	8	2,5
H-03-04025-M10	40	25	M10	10	2,5
H-03-04030-M8	40	30	M8	8	2,5
H-03-04030-M10	40	30	M10	10	2,5
H-03-04035-M8	40	35	M8	8	2,5
H-03-04035-M10	40	35	M10	10	2,5
H-03-04040	40	40	M8	8	2,5
H-03-04040-M10	40	40	M10	10	2,5
H-03-04045	40	45	M8	8	2,5
H-03-04050	40	50	M8	8	2,5
H-03-05030	50	30	M10	10	2,5
H-03-05035	50	35	M10	10	2,5

Article no.	Dimensions in mm				
	Ø d	h	g	l	S
H-03-05040	50	40	M10	10	2,5
H-03-05045	50	45	M10	10	2,5
H-03-05050	50	50	M10	10	2,5
H-03-06030-M12	60	30	M12	12	2,5
H-03-06040-M10	60	40	M10	10	2,5
H-03-06040-M12	60	40	M12	12	2,5
H-03-06045-M10	60	45	M10	10	2,5
H-03-06050-M12	60	50	M12	12	2,5
H-03-06060-M10	60	60	M10	10	2,5
H-03-06060-M12	60	60	M12	12	2,5
H-03-07035	70	35	M10	10	2,5
H-03-07040	70	40	M10	10	2,5
H-03-07045-M10	70	45	M10	10	2,5
H-03-07045-M12	70	45	M12	12	2,5
H-03-07050	70	50	M10	10	2,5
H-03-07055	70	55	M10	10	2,5
H-03-07525	75	25	M12	12	2,5
H-03-07530	75	30	M12	12	2,5
H-03-07540	75	40	M12	12	2,5
H-03-07545	75	45	M12	12	2,5
H-03-07550	75	50	M12	12	2,5
H-03-07555	75	55	M12	12	2,5
H-03-07560	75	60	M12	12	2,5
H-03-07570	75	70	M12	12	2,5
H-03-07575	75	75	M12	12	2,5
H-03-10040	100	40	M16	16	3
H-03-10050	100	50	M16	16	3
H-03-10055	100	55	M16	16	3
H-03-10060	100	60	M16	16	3
H-03-10075	100	75	M16	16	3
H-03-100100	100	100	M16	16	3
H-03-100120	100	120	M16	16	3
H-03-12070	120	70	M16	16	3
H-03-12550	125	50	M16	16	4
H-03-12555	125	55	M16	16	4
H-03-15050	150	50	M16	16	4
H-03-15055	150	55	M16	16	4
H-03-15075	150	75	M16	16	4
H-03-16070	160	70	M16	16	4
H-03-200100	200	100	M20	20	6

Rubber-metal-buffer

HoKon
VERSCHLUSSTECHNIK &
SONDERKONSTRUKTIONEN

Rubber-metal-buffer, Type “D“
With threaded bolt, one sized

Natural rubber in 55° shore -"intermediate"
On request also available 45º, 65º, 70º Shore



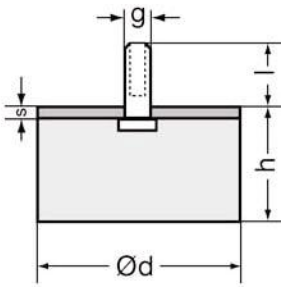

Article no.	Dimensions in mm				
	Ø d	h	g	L	S
H-04-01008	10	8	M4	11	2
H-04-01010	10	10	M4	11	2
H-04-01015	10	15	M4	11	2
H-04-01310	13	10	M4	11	2
H-04-01415	14	15	M4	11	2
H-04-01504	15	4	M4	11	2
H-04-01506	15	6	M4	11	2
H-04-01507	15	7	M4	11	2
H-04-01508	15	8	M4	11	2
H-04-01510	15	10	M4	11	2
H-04-01512	15	12	M4	11	2
H-04-01513	15	13	M4	11	2
H-04-01515	15	15	M4	11	2
H-04-01520	15	20	M4	11	2
H-04-01525	15	25	M4	11	2
H-04-01528	15	28	M4	11	2
H-04-01530	15	30	M4	11	2
H-04-001805,5	18	5,5	M6	18	2
H-04-001807,5	18	7,5	M6	18	2
H-04-001808,5	18	8,5	M6	18	2
H-04-02005	20	5	M6	18	2,5
H-04-02008	20	8	M6	18	2,5
H-04-02010	20	10	M6	18	2,5
H-04-02012	20	12	M6	18	2,5
H-04-02015	20	15	M6	18	2,5
H-04-02020	20	20	M6	18	2,5
H-04-02025	20	25	M6	18	2,5
H-04-02030	20	30	M6	18	2,5
H-04-02035	20	35	M6	18	2,5
H-04-02065	20	60	M6	18	2,5
H-04-02506	25	6	M6	18	2,5
H-04-02508	25	8	M6	18	2,5
H-04-02510	25	10	M6	18	2,5
H-04-02512	25	12	M6	18	2,5

Article no.	Dimensions in mm				
	Ø d	h	g	l	S
H-04-02515	25	15	M6	18	2,5
H-04-02517	25	17	M6	18	2,5
H-04-02520	25	20	M6	18	2,5
H-04-02525	25	25	M6	18	2,5
H-04-02528	25	28	M6	18	2,5
H-04-02530	25	30	M6	18	2,5
H-04-02540	25	40	M6	18	2,5
H-04-02570	25	70	M6	18	2,5
H-04-03005	30	5	M8	23	2,5
H-04-03008	30	8	M8	23	2,5
H-04-03010	30	10	M8	23	2,5
H-04-03015	30	15	M8	23	2,5
H-04-03017	30	17	M8	23	2,5
H-04-03020	30	20	M8	23	2,5
H-04-03025	30	25	M8	23	2,5
H-04-03030	30	30	M8	23	2,5
H-04-03040	30	40	M8	23	2,5
H-04-03080	30	80	M8	23	2,5
H-04-03520	35	20	M8	23	2,5
H-04-03530	35	30	M8	23	2,5
H-04-04010	40	10	M8	23	2,5
H-04-04012	40	12	M8	23	2,5
H-04-04015	40	15	M8	23	2,5
H-04-04020	40	20	M8	23	2,5
H-04-04025	40	25	M8	23	2,5
H-04-04027	40	27	M8	23	2,5
H-04-04028	40	28	M8	23	2,5
H-04-04030	40	30	M8	23	2,5
H-04-04030-M10	40	30	M10	28	2,5

TÜVRheinland ZERTIFIZIERT
Management System
ISO 9001:2015
ISO 14001:2015
www.tuv.com ID 9108624624

Further materials and surface finishes on demand. We will be pleased to give you advice.

Phone: +49 (0) 231 / 725 790 -0
Fax: +49 (0) 231 / 725 790 -10
eMail: info@hokon-verschlusstechnik.de
Homepage: www.hokon-verschlusstechnik.de

Rubber-metal-buffer

HoKon
VERSCHLUSSTECHNIK &
SONDERKONSTRUKTIONEN

Rubber-metal-buffer, Type “D“
With threaded bolt, one sized

Natural rubber in 55° shore -"intermediate"
On request also available 45º, 65º, 70º Shore



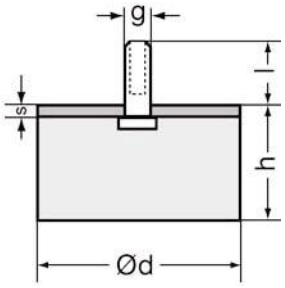

Article no.	Dimensions in mm				
	Ø d	h	g	l	S
H-04-04035	40	35	M8	23	2,5
H-04-04040	40	40	M8	23	2,5
H-04-04040-M10	40	40	M10	28	2,5
H-04-04045	40	45	M8	23	2,5
H-04-04050	40	50	M8	23	2,5
H-04-04055	40	55	M8	23	2,5
H-04-05010	50	10	M10	28	2,5
H-04-05012	50	12	M10	28	2,5
H-04-05015	50	15	M10	28	2,5
H-04-05017	50	17	M10	28	2,5
H-04-05020	50	20	M10	28	2,5
H-04-05025	50	25	M10	28	2,5
H-04-05030	50	30	M10	28	2,5
H-04-05040	50	40	M10	28	2,5
H-04-05045	50	45	M10	28	2,5
H-04-05050	50	50	M10	28	2,5
H-04-05060	50	60	M10	28	2,5
H-04-05080	50	80	M10	28	2,5
H-04-06020-M10	60	20	M10	28	2,5
H-04-06020-M12	60	20	M12	37	2,5
H-04-06030	60	30	M10	28	2,5
H-04-06030-M12	60	30	M12	37	2,5
H-04-06040-M12	60	40	M12	37	2,5
H-04-06050-M10	60	50	M10	28	2,5
H-04-06050-M12	60	50	M12	37	2,5
H-04-06060-M12	60	60	M12	37	2,5
H-04-07025	70	25	M10	28	2,5
H-04-07040	70	40	M10	28	2,5
H-04-07040-M12	70	40	M12	37	2,5

Article no.	Dimensions in mm				
	Ø d	h	g	l	S
H-04-07045	70	45	M10	28	2,5
H-04-07045-M12	70	45	M12	37	2,5
H-04-07050-M10	70	50	M10	28	2,5
H-04-07050-M12	70	50	M12	37	2,5
H-04-07515	75	15	M12	37	2,5
H-04-07520	75	20	M12	37	2,5
H-04-07525	75	25	M12	37	2,5
H-04-07540	75	40	M12	37	2,5
H-04-07545	75	45	M12	37	2,5
H-04-07550	75	50	M12	37	2,5
H-04-07555	75	55	M12	37	2,5
H-04-07560	75	60	M12	37	2,5
H-04-07570	75	70	M12	37	2,5
H-04-10025	100	25	M16	43	3
H-04-10036	100	36	M16	43	3
H-04-10040	100	40	M16	43	3
H-04-10050	100	50	M16	43	3
H-04-10055	100	55	M16	43	3
H-04-10060	100	60	M16	43	3
H-04-10075	100	75	M16	43	3
H-04-100100	100	100	M16	43	3
H-04-15050	150	50	M16	43	4
H-04-15055	150	55	M16	43	4
H-04-15075	150	75	M16	43	4
H-04-200200-M16	200	200	M16	43	6

Rubber-metal-buffer

HoKon
VERSCHLUSSTECHNIK &
SONDERKONSTRUKTIONEN

Rubber-metal-buffer, Type “E“
With internal threads, one sized

Natural rubber in 55° shore -"intermediate"
On request also available 45º, 65º, 70º Shore



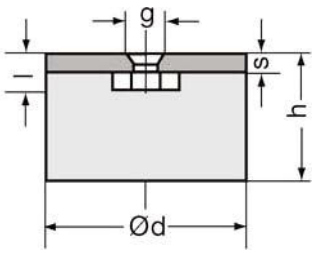

Article no.	Dimensions in mm				
	Ø d	h	g	l	S
H-05-0808	8	8	M3	3	2
H-05-01508	15	8	M4	4	2
H-05-01515	15	15	M4	4	2
H-05-01520	15	20	M4	4	2
H-05-01525	15	25	M4	4	2
H-05-01530	15	30	M4	4	2
H-05-02011	20	11	M6	6	2,5
H-05-02013,5	20	13,5	M6	6	2,5
H-05-02015	20	15	M6	6	2,5
H-05-02020	20	20	M6	6	2,5
H-05-02025	20	25	M6	6	2,5
H-05-02030	20	30	M6	6	2,5
H-05-02515	25	15	M6	6	2,5
H-05-02520	25	20	M6	6	2,5
H-05-02525	25	25	M6	6	2,5
H-05-02530	25	30	M6	6	2,5
H-05-03015	30	15	M8	8	2,5
H-05-03017	30	17	M8	8	2,5
H-05-03020	30	20	M8	8	2,5
H-05-03025	30	25	M8	8	2,5
H-05-03028	30	28	M8	8	2,5
H-05-03030	30	30	M8	8	2,5
H-05-03040	30	40	M8	8	2,5
H-05-04015-M8	40	15	M8	8	2,5
H-05-04020-M8	40	20	M8	8	2,5
H-05-04020-M10	40	20	M10	10	2,5
H-05-04025-M8	40	25	M8	8	2,5
H-05-04025-M10	40	25	M10	10	2,5
H-05-04028	40	28	M8	8	2,5
H-05-04030-M8	40	30	M8	8	2,5
H-05-04030-M10	40	30	M10	10	2,5
H-05-04035	40	35	M8	8	2,5
H-05-04040-M8	40	40	M8	8	2,5
H-05-04040-M10	40	40	M10	10	2,5
H-05-04045-M8	40	45	M8	8	2,5
H-05-05020	50	20	M10	10	2,5
H-05-05025	50	25	M10	10	2,5
H-05-05030	50	30	M10	10	2,5
H-05-05040	50	40	M10	10	2,5
H-05-05045	50	45	M10	10	2,5
H-05-05050	50	50	M10	10	2,5
H-05-05080	50	80	M10	10	2,5

Article no.	Dimensions in mm				
	Ø d	h	g	l	S
H-05-06020-M12	60	20	M12	12	2,5
H-05-06030-M12	60	30	M12	12	2,5
H-05-06030-M16	60	30	M16	16	2,5
H-05-06040-M10	60	40	M10	10	2,5
H-05-06040-M12	60	40	M12	12	2,5
H-05-06050-M12	60	50	M12	12	2,5
H-05-06060-M12	60	60	M12	12	2,5
H-05-07040-M12	70	40	M12	12	2,5
H-05-07045-M10	70	45	M10	10	2,5
H-05-07050-M12	70	50	M12	12	2,5
H-05-07055	70	55	M10	10	2,5
H-05-07515	75	15	M12	12	2,5
H-05-07525	75	25	M12	12	2,5
H-05-07530	75	30	M12	12	2,5
H-05-07540-M12	75	40	M12	12	2,5
H-05-07540-M16	75	40	M16	16	2,5
H-05-07545	75	45	M12	12	2,5
H-05-07550	75	50	M12	12	2,5
H-05-07555	75	55	M12	12	2,5
H-05-07570	75	70	M12	12	2,5
H-05-10036	100	36	M16	16	3
H-05-10040	100	40	M16	16	3
H-05-10050	100	50	M16	16	3
H-05-10055	100	55	M16	16	3
H-05-10060	100	60	M16	16	3
H-05-10075	100	75	M16	16	3
H-05-100100	100	100	M16	16	3
H-05-12550	125	50	M16	16	4
H-05-125100	125	100	M16	16	4
H-05-15050-M16	150	50	M16	16	4
H-05-15055-M16	150	55	M16	16	4
H-05-15075-M16	150	75	M16	16	4
H-05-15075-M20	150	75	M20	4	
H-05-200100-M16	200	100	M16	16	6

TÜVRheinland ZERTIFIZIERT
Management System
ISO 9001:2015
ISO 14001:2015
www.tuv.com ID 9108624624

Further materials and surface finishes on demand. We will be pleased to give you advice.

Phone: +49 (0) 231 / 725 790 -0
Fax: +49 (0) 231 / 725 790 -10
eMail: info@hokon-verschlusstechnik.de
Homepage: www.hokon-verschlusstechnik.de

Rubber-metal-buffer

Rubber-metal-buffer, Type „ES“

With suction cup and internal thread, on the one hand

Natural rubber in 55° shore -"intermediate"
On request also available in 45º, 65º, 70º Shore



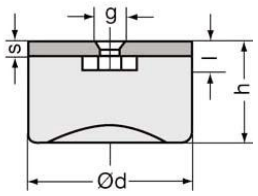

Article no.	Dimensions in mm				
	Ø d	h	g	l	S
H-ES-20x23,5	20	23,5	M6	6	2,5
H-ES-25x18,5	25	18,5	M6	6	2,5
H-ES-25x20	25	20	M6	6	2,5
H-ES-30x10	30	10	M8	8	2,5
H-ES-30x28,5	30	28,5	M8	8	2,5

Article no.	Dimensions in mm				
	Ø d	h	g	l	S
H-ES-40x28	40	28	M8	8	2,5
H-ES-50x28,5	50	28,5	M10	10	2,5
H-ES-70x30	70	30	M10	10	2,5
H-ES-100x50	100	50	M16	16	3

Rubber-metal-buffer, Type “DS”

With suction cup and threaded bolts, one-sided

Natural rubber in 55° shore -"intermediate"
On request also available in 45º, 65º, 70º Shore



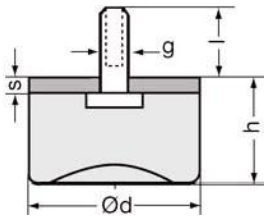

Article no.	Dimensions in mm				
	Ø d	h	g	l	S
H-DS-20x23,5	20	23,5	M6	18	2,5
H-DS-25x18,5	25	18,5	M6	18	2,5
H-DS-25x20	25	20	M6	18	2,5
H-DS-30x10	30	10	M8	23	2,5
H-DS-30x28,5	30	28,5	M8	23	2,5
H-DS-40x28	40	28	M8	23	2,5

Article no.	Dimensions in mm				
	Ø d	h	g	l	S
H-DS-50x28,5	50	28,5	M10	28	2,5
H-DS-70x30	70	30	M10	28	2,5
H-DS-70x43	70	43	M12	37	2,5
H-DS-75x37	75	37	M12	37	2,5
H-DS-100x50	100	50	M16	43	3

Rubber-metal-buffer, Type “TA”

waisted, with threaded bolts, duplex

Natural rubber in 55° shore -"intermediate"
On request also available in 45º, 65º, 70º Shore



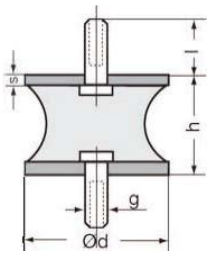

Article no.	Dimensions in mm				
	Ø d	h	g	l	S
H-T-15x15	15	15	M4	13	2
H-T-15x30	15	30	M4	13	2
H-T-18x12	18	12	M6	18	2
H-T-20x15	20	15	M6	18	2,5
H-T-25x20	25	20	M6	18	2,5
H-T-30x15	30	15	M8	23	2,5
H-T-30x20	30	20	M8	23	2,5
H-T-30x25	30	25	M8	23	2,5
H-T-30x30	30	30	M8	23	2,5
H-T-30x40	30	40	M8	23	2,5

Article no.	Dimensions in mm				
	Ø d	h	g	l	S
H-T-40x30	40	30	M8	23	2,5
H-T-40x48	40	48	M8	23	2,5
H-T-40x50	40	50	M8	23	2,5
H-T-50x30	50	30	M10	28	2,5
H-T-50x40	50	40	M10	28	2,5
H-T-60x50	60	50	M10	28	2,5
H-T-60x65	60	65	M10	28	2,5
H-T-75x35	75	35	M12	37	2,5
H-T-75x40	75	40	M12	37	2,5
H-T-100x75	100	75	M16	43	3

Rubber-metal-buffer

Rubber-metal-buffer, Type “K”

Conical, with threaded bolts, one-sided

Natural rubber in 55° shore -"intermediate"
On request also available in 45º, 65º, 70º Shore





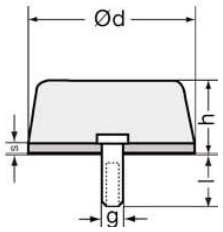

Article no.	Dimensions in mm				
	Ø d	h	g	l	S
H-K-08x07	8	7	M4	8	2
H-K-015x10	15	10	M4	10	2
H-K-01512	15	12	M4	13	2
H-K-020x17	20	17	M5	18	2,5
H-K-20,5x13	20	13	M8	20	2,5
H-K-025x05	25	5	M6	18	2,5
H-K-025x12	25	12	M6	18	2,5
H-K-025x15	25	15	M4	13	2,5
H-K-025x17	25	17	M6	18	2,5
H-K-025x20	25	20	M6	18	2,5
H-K-025x22	25	22	M6	13	2,5
H-K-025x28	25	28	M6	18	2,5
H-K-025x35	25	35	M6	18	2,5

Article no.	Dimensions in mm				
	Ø d	h	g	l	S
H-K-030x15	30	15	M8	23	2,5
H-K-030x20	30	20	M8	23	2,5
H-K-030x25	30	25	M8	23	2,5
H-K-030x28	30	28	M8	23	2,5
H-K-030x40	30	40	M8	23	2,5
H-K-035x40	35	40	M8	23	2,5
H-K-040x25	40	25	M10	28	2,5
H-K-050x17	50	17	M10	28	2,5
H-K-050x18	50	18	M10	28	2,5
H-K-050x20	50	20	M10	28	2,5
H-K-050x30	50	30	M10	28	2,5
H-K-050x40	50	40	M10	28	2,5
H-K-050x55	50	55	M10	28	2,5
H-K-80x28	80	28	M12	37	2,5

Rubber-metal-buffer, Type “TB”

This article is only available on request.
waisted, with threaded bolts and internal thread

Natural rubber in 55° shore -"intermediate"
On request also available in 45º, 65º, 70º Shore



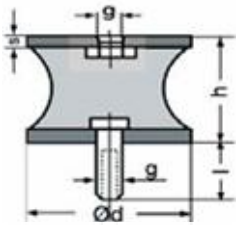

Article no.	Dimensions in mm				
	Ø d	h	g	l	S
H-T02-15x15	15	15	M4	13	2
H-T02-15x30	15	30	M4	13	2
H-T02-18x12	18	12	M6	18	2
H-T02-20x15	20	15	M6	18	2,5
H-T02-25x20	25	20	M6	18	2,5
H-T02-30x15	30	15	M8	23	2,5
H-T02-30x20	30	20	M8	23	2,5
H-T02-30x25	30	25	M8	23	2,5
H-T02-30x30	30	30	M8	23	2,5
H-T02-30x40	30	40	M8	23	2,5

Article no.	Dimensions in mm				
	Ø d	h	g	l	S
H-T02-40x30	40	30	M8	23	2,5
H-T02-40x48	40	48	M8	23	2,5
H-T02-40x50	40	50	M8	23	2,5
H-T02-50x30	50	30	M10	28	2,5
H-T02-50x40	50	40	M10	28	2,5
H-T02-60x50	60	50	M10	28	2,5
H-T02-60x65	60	65	M10	28	2,5
H-T02-75x35	75	35	M12	37	2,5
H-T02-75x40	75	40	M12	37	2,5
H-T02-100x75	100	75	M16	43	3

TÜVRheinland ZERTIFIZIERT
Management System
ISO 9001:2015
ISO 14001:2015
www.tuv.com ID 9108624624

Further materials and surface finishes on demand. We will be pleased to give you advice.
Phone: +49 (0) 231 / 725 790 -0 eMail: info@hokon-verschlusstechnik.de
Fax: +49 (0) 231 / 725 790 -10 Homepage: www.hokon-verschlusstechnik.de

Rubber-metal-buffer

HoKon
VERSCHLUSSTECHNIK &
SONDERKONSTRUKTIONEN

Rubber-metal-buffer, Type “TC“

This article is only available on request.
waisted, with internal thread, duplex

Natural rubber in 55° shore -"intermediate"
On request also available in 45º, 65º, 70º Shore



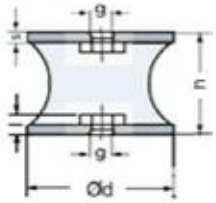

Article no.	Dimensions in mm				
	Ø d	h	g	l	S
H-T03-15x15	15	15	M4	4	2
H-T03-15x30	15	30	M4	4	2
H-T03-20x15	20	15	M6	6	2,5
H-T03-25x20	25	20	M6	6	2,5
H-T03-30x20	30	20	M8	8	2,5
H-T03-30x25	30	25	M8	8	2,5
H-T03-30x30	30	30	M8	8	2,5
H-T03-30x40	30	40	M8	8	2,5
H-T03-40x30	40	30	M8	8	2,5

Article no.	Dimensions in mm				
	Ø d	h	g	l	S
H-T03-40x48	40	48	M8	8	2,5
H-T03-40x50	40	50	M8	8	2,5
H-T03-50x30	50	30	M10	10	2,5
H-T03-50x40	50	40	M10	10	2,5
H-T03-60x50	60	50	M10	10	2,5
H-T03-60x65	60	65	M10	10	2,5
H-T03-75x35	75	35	M12	12	2,5
H-T03-75x40	75	40	M12	12	2,5
H-T03-100x75	100	75	M16	16	3

Rubber-metal-buffer, Type “P”

parabolic, with threaded bolts, one-sided
With internal thread on request.

Natural rubber in 55° shore -"intermediate"
On request also available in 45º, 65º, 70º Shore



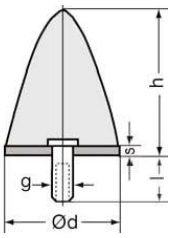

Article no.	Dimensions				
	Ø d	h	g	l	S
H-P-15x15	15	15	M4	13	2
H-P-20x24	20	24	M6	18	2,5
H-P-25x15	25	15	M6	18	2,5
H-P-25x19	25	19	M6	18	2,5
H-P-30x36	30	36	M8	23	2,5
H-P-32x36	32	36	M8	23	2,5

Article no.	Dimensions in mm				
	Ø d	h	g	l	S
H-P-50x58	50	58	M10	28	2,5
H-P-50x65	50	65	M10	28	2,5
H-P-75x89	75	89	M12	37	2,5
H-P-95x83	95	83	M16	43	2,5
H-P-115x136	115	136	M16	42	3

Rubber-metal-buffer, Type “KE“

conical, with internal thread, one-sided
With external thread on request.

Natural rubber in 55° shore -"intermediate"
On request also available in 45º, 65º, 70º Shore



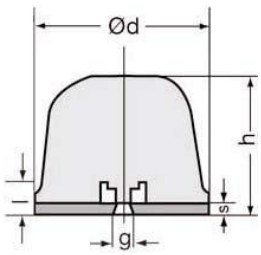

Article no.	Dimensions in mm				
	Ø d	h	g	l	S
H-KE-50x35	50	35	M10	10	2,5
H-KE-80x60	80	60	M12	12	2,5
H-KE-125x90	125	90	M16	16	4

Rubber-metal-buffer

Rubber-metal-buffer
“crane–bump stop“
With internal thread, one-sided
With external thread on request.

Natural rubber in 55° shore -"intermediate"
On request also available in 45º, 65º, 70º Shore



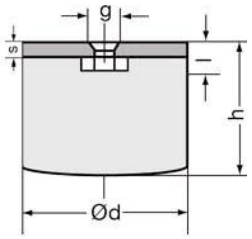

Article no.	Dimensions in mm				
	Ø d	h	g	l	S
H-KRA-50x35	50	35	M10	10	2,5
H-KRA-50x40	50	40	M10	10	2,5
H-KRA-63x50	63	50	M10	10	2,5
H-KRA-80x66	80	66	M12	12	2,5
H-KRA-100x84	100	84	M16	16	3

Article no.	Dimensions in mm				
	Ø d	h	g	l	S
H-KRA-125x104	125	104	M16	16	4
H-KRA-160x131	160	131	M16	16	4
H-KRA-200x166	200	166	M20	20	6
H-KRA-250x208	250	208	M20	20	6

Rubber-metal-puffer, Type “KV”
Conical, with threaded bolts, one-sided

Natural rubber in 55° shore -"intermediate"
On request also available in 45º, 65º, 70º Shore



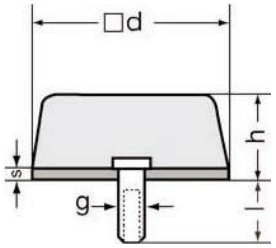

Article no.	Dimensions in mm					
	Length	Wide	h	g	l	s
H-KV-80x25	80	80	25	M12	37	2,5
H-KV-80x30	80	80	30	M12	37	2,5

Rubber-metal-elements
“maschine feed, square, 4-hole“
With internal thread, one-sided

Natural rubber in 55° shore -"intermediate"
On request also available in 45º, 65º, 70º Shore



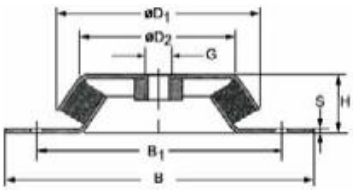

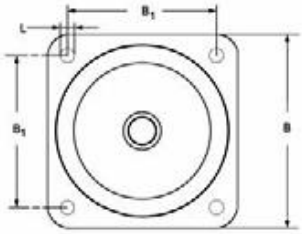

Article no.	Dimensions in mm							
	B	B1	Ø L	D1	Ø D2	G	S	H
H-MF-184	184	150	13	177	126	M20	4,5	63
H-MF-168	168	132	12,5	150	110	M16	4	51,5

TÜVRheinland ZERTIFIZIERT Management System ISO 9001:2015 ISO 14001:2015 www.tuv.com ID 9108624624

Further materials and surface finishes on demand. We will be pleased to give you advice.
Phone: +49 (0) 231 / 725 790 -0 eMail: info@hokon-verschlusstechnik.de
Fax: +49 (0) 231 / 725 790 -10 Homepage: www.hokon-verschlusstechnik.de

Rubber-metal-buffer



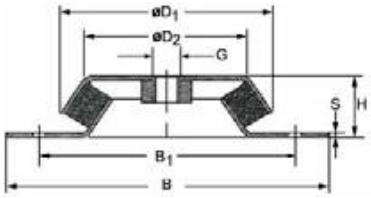

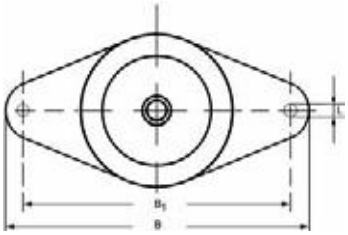

Rubber-metal-elements
“maschine feed, oval, 2-hole“
With internal thread, one-sided

Natural rubber in 55° shore -"intermediate"
On request also available in 45º, 65º, 70º Shore

Article no.	Dimensions in mm							
	B	B1	Ø L	D1	Ø D2	G	S	H
H-MF-170	170	140	13	106	88,5	M12	3	39
H-MF-128	128	110	6	78	60,5	M10	2	30

Rubber-metal-elements
“maschine feed oval, 2-hole“
With

Natural rubber in 55° shore -"intermediate"
On request also available in 45º, 65º, 70º Shore

Article no.	Dimensions in mm							
	B	B1	Ø L	D1	Ø D2	G	S	H
H-MF-170A	170	140	13	106	88,5	M12	3	39
H-MF-128A	128	110	6	78	60,5	M10	2	30

Rubber-metal-elements
“maschine feed square, 4-hole“
With height adjustment

Natural rubber in 55° shore -"intermediate"
On request also available in 45º, 65º, 70º Shore

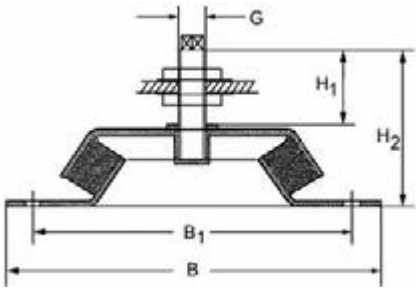

Article no.	Dimensions in mm					
	B	B1	Ø L	G	H1	H2
H-MF-184H	184	150	13	M20x2	147	80
H-MF-168H	168	132	12,5	M20x2	135	80

Rubber-metal-elements
“maschine feed oval, 2-hole“
Execution, with height adjustment"

Natural rubber in 55° shore -"intermediate"
On request also available in 45º, 65º, 70º Shore

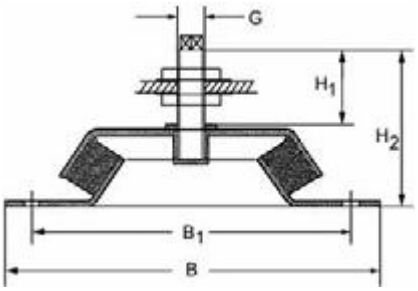

Article no.	Dimensions in mm					
	B	B1	Ø L	G	H1	H2
H-MF-170H	170	140	13	M16x1,5	106	65
H-MF-128H	128	110	6	M16x1,5	97	68

Rubber-metal-buffer

HoKon
VERSCHLUSSTECHNIK &
SONDERKONSTRUKTIONEN

Rubber-metal-elements
“conus bearing“

Natural rubber in 55° shore -"intermediate"
On request also available in 45º, 65º, 70º Shore



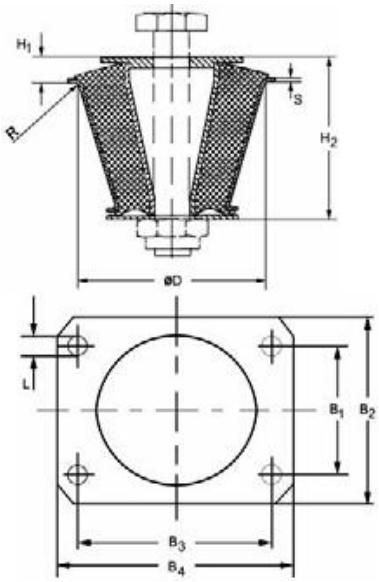

Article no.	Dimensions in mm									
	H1	H2	S	R	Ø D	L	B1	B2	B3	B4
H-KL-140120	23	95	4,5	4	109	11	92	120	112	140
H-KL-120100	20	81	4,3	4	93	11	74	100	90	120
H-KL-107090	19,5	56	3,5	3	78	11	65	90	80	107

Rubber-metal-elements
“clip-elements“

Natural elements in 55° shore -"intermediate"
On request also available in 45º, 65º, 70º Shore



H-BE-108-25

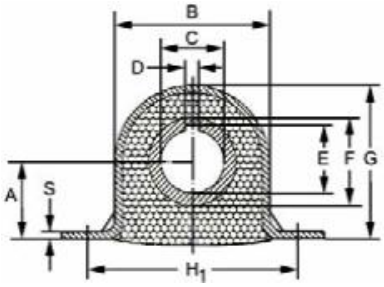

H-BE-108-32

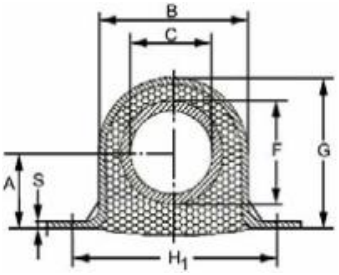

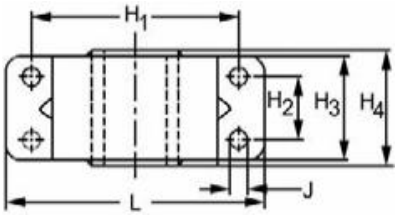

Article no.	Dimensions in mm													
	A	B	C	D	E	F	G	H1	H2	H3	H4	J	L	S
H-BE-108-25	27,5	62	25	6	27,5	35	58,5	85	24	40	45	8,5	108	3,5
H-BE-108-32	27,5	62	32	-	-	40	58,5	85	25	40	45	9	108	3,5

Rubber-metal-elements
“flange-elements“

Natural rubber in 55° shore -"intermediate"
On request also available in 45º, 65º, 70º Shore



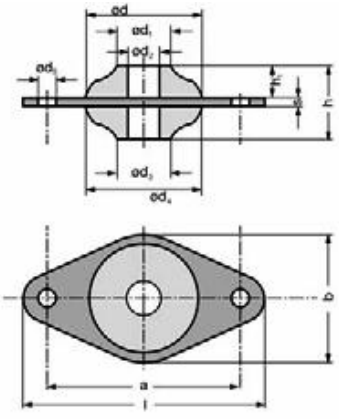

Article no.	Dimensions in mm										
	Ø d	h	l	Ø d1	Ø d2	Ø d3	Ø d4	a	b	h1	Ø d5	S
H-FE-721	68	49	117	39	16	37	65	94	71	28	9	5

TÜVRheinland ZERTIFIZIERT
Management System
ISO 9001:2015
ISO 14001:2015
www.tuv.com ID 9108624624

Further materials and surface finishes on demand. We will be pleased to give you advice.
Phone: +49 (0) 231 / 725 790 -0 eMail: info@hokon-verschlusstechnik.de
Fax: +49 (0) 231 / 725 790 -10 Homepage: www.hokon-verschlusstechnik.de

Rubber-metal-buffer

Rubber-metal-elements
“ring-element“

Natural rubber in 55° shore -"intermediate"
On request also available in 45º, 65º, 70º Shore



Article no.	Dimensions in mm							
	Ø D	Ø A	Ø B	Ø C	E	F	s	R
H-R-36x10	36	8,5	12	17	10	3	1,5	1
H-R-36x12	36	8,5	12	18	12	4	1	1
H-R-41x15,5	41	8,5	15	17	20	5	1	1
H-R-50x16,5	50	16,5	20	23	13	9,5	1,5	2,5
H-R-60x12	60	20,5	24	27	13	10,5	1,5	2,5

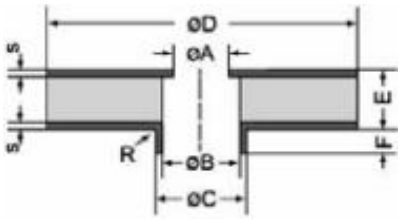

Rubber-metal-elements
“spring washers“

Natural rubber in 55° shore -"intermediate"
On request also available in 45º, 65º, 70º Shore

Article no.	Dimensions in mm										
	Ø A	Ø a	Ø B	Ø b	Ø C	H	s	E	α	R	r
H-FS-6511	65	26	62	30	46	11	1	2,5	60	2	0,5
H-FS-9510	95	45	90	50	70	10,5	1,5	2,5	60	2,5	1
H-FS-10027	100	35	90	40	64	27,5	1,5	3,5	60	3	1
H-FS-11015	110	40	102	44	76	15,8	1,75	3,5	60	3	1
H-FS-13016	130	55	123	60	90	16	2	5	60	4	2
H-FS-15330	153	55	145	60	102	30	2	5	60	4	2
H-FS-16423	164	60	156	64	110	23	2	4	60	4	2
H-FS-21020	210	95	200	100	154	20	2	6	60	6	1,2
H-FS-22062	220	66	200	100	154	62	2	6	60	6	1,2
H-FS-24025	240	70	230	76	154	25	2	6	60	5	2

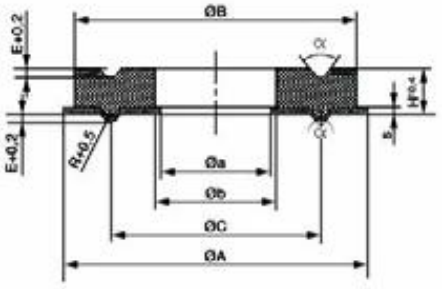

Rubber-metal-elements
“gear-buffer“

Natural rubber in 55° shore -"intermediate"
On request also available in 45º, 65º, 70º Shore



Article no.	Dimensions in mm											
	a	b	d1	d2	d3	e	g	l	k	s	C	L
H-RP-35	80	40	7	11	15	45	75	17,5	5	4	35	45
H-RP-45	150	60	11,5	18	24	70	134	40	9	4	45	59
H-RP-80	200	100	13,5	21	28	90	168	55	12	4	80	100
H-RP-100	250	125	13,5	21	32	100	212	75	20	4	100	135

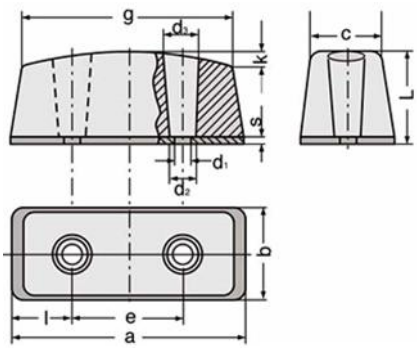

Rubber-metal-buffer

HoKon
VERSCHLUSSTECHNIK &
SONDERKONSTRUKTIONEN

Load table for miscellaneous types with different rubber hardness

The given acceptable loads constitute only approximate values for statical loads

Hard: ca. 70 Shore A Middle: ca. 55 Shore A Soft: ca. 45 Shore
Article no.: H-01... type A

Dimensions in mm				Compressive stresses						Shoe stresses					
				Spring rate c_2 in N/mm			Acceptable load F in N			Spring rate c x/y in N/mm			Acceptable load F in N		
D	H	G	L	Hard	Middle	Soft	Hard	Middle	Soft	Hard	Middle	Soft	Hard	Middle	Soft
20	15	M6	18	300	190	120	500	320	200	60	40	30	190	120	70
30	15	M8	23	670	410	250	1100	700	400	90	60	40	350	210	130
30	30	M8	23	240	150	100	900	570	340	50	30	20	430	280	170
40	30	M8	23	480	300	170	1800	1110	670	90	60	30	770	500	250
50	20	M10	28	2400	1500	900	5000	3190	1870	240	160	100	1200	770	460
50	40	M10	28	600	380	220	2800	1750	1050	120	80	50	1280	800	460
75	25	M12	37	5000	2900	1700	12800	8000	4700	410	260	160	2800	1750	1030
75	55	M12	37	650	400	240	4700	3000	1750	130	80	50	2100	1300	800
100	40	M16	43	3000	1900	1100	15200	9500	5600	370	220	140	4450	2770	1650
100	55	M16	43	1600	1120	700	12900	8000	4800	300	190	130	4450	2770	1650
100	75	M16	43	1250	710	430	10100	6130	3710	250	160	90	4400	2700	1600
150	75	M16	43	2900	1900	1200	17500	10600	6500	490	310	210	6130	3910	2150
150	75	M20	43	2900	1900	1200	17500	10600	6500	490	310	210	6130	3910	2150
200	100	M20	46	3510	2490	1450	32600	20050	12160	520	380	220	11900	7120	4260

Article no. H-02... type B

Dimensions in mm				Compressive stresses						Shoe stresses					
				Spring rate c_2 in N/mm			Acceptable load F in N			Spring rate c x/y in N/mm			Acceptable load F in N		
D	H	G	L	Hard	Middle	Soft	Hard	Middle	Soft	Hard	Middle	Soft	Hard	Middle	Soft
25	20	M6	18	320	160	120	490	320	190	70	45	25	230	160	90
30	20	M8	23	660	430	260	830	520	310	100	75	50	330	210	130
30	30	M8	23	350	220	130	750	450	280	70	50	30	350	220	130
40	30	M8	23	550	350	210	1250	750	450	110	70	40	520	330	200
50	40	M10	28	560	370	220	2100	1270	760	120	80	45	930	580	350
50	50	M10	28	350	220	130	1750	1100	650	80	50	30	800	510	310
75	50	M12	37	950	630	330	4700	2910	1720	180	120	80	1900	1200	710
100	40	M16	43	3300	1700	1200	6800	4300	2600	450	250	150	2300	1400	850
100	75	M16	43	1100	700	410	7400	4500	2700	210	120	70	2900	1910	1090

Article no. H-03... type C

Dimensions in mm				Compressive stresses						Shoe stresses					
				Spring rate c_2 in N/mm			Acceptable load F in N			Spring rate c x/y in N/mm			Acceptable load F in N		
D	H	G	L	Hard	Middle	Soft	Hard	Middle	Soft	Hard	Middle	Soft	Hard	Middle	Soft
20	25	M6	6	200	130	80	300	190	120	50	30	20	150	90	60
30	30	M8	8	590	380	220	720	450	270	90	60	50	260	170	110
40	30	M8	8	900	570	340	1080	680	410	150	90	60	380	240	140
50	30	M10	10	1700	1090	650	2500	1750	950	210	150	70	470	290	170
50	50	M10	10	360	220	140	1390	870	520	80	40	30	610	390	230
75	50	M12	12	1010	630	370	3650	2050	1200	200	130	80	1560	980	580
100	75	M16	16	1300	800	480	4700	2900	1690	210	140	70	1950	1250	700
150	75	M16	16	2650	1650	980	14800	9100	5500	430	270	170	5450	3400	2010
200	100	M20	20	3500	2300	1300	33300	20700	12900	510	330	210	11000	6810	4000

TÜVRheinland ZERTIFIZIERT Management System ISO 9001:2015 ISO 14001:2015 www.tuv.com ID 9108624624

Further materials and surface finishes on demand. We will be pleased to give you advice.
Phone: +49 (0) 231 / 725 790 -0 eMail: info@hokon-verschlusstechnik.de
Fax: +49 (0) 231 / 725 790 -10 Homepage: www.hokon-verschlusstechnik.de

Rubber-metal-buffer

Load table for miscellaneous types with different rubber hardness

The given acceptable loads constitute only approximate values for statical loads

Middle: ca. 55 Shore A
Article no. H-04... type D

Dimensions in mm				Compressive stresses	
				Spring rate c 2 in N/mm	Acceptable load F in N
D	H	G	L	Middle	Middle
18	7,5	M4	11	340	240
25	20	M6	18	150	260
30	20	M8	23	330	730
40	30	M8	23	250	950
50	20	M10	28	660	1750
75	25	M12	37	1430	4650
100	40	M16	43	1450	7850
200	100	M20	43	2000	18000

Article no.: H-05... type E

Dimensions in mm			Compressive stresses	
			Spring rate c 2 in N/mm	Acceptable load F in N
d	h	ig	Middle	Middle
20	15	M6	200	240
30	15	M8	580	660
40	30	M8	360	940
50	20	M10	740	1150
75	25	M12	1730	3250
100	40	M16	1450	5030
150	75	M16	1510	12240
200	100	M20	2200	23000

Rubber-metal-buffer

HoKon
VERSCHLUSSTECHNIK &
SONDERKONSTRUKTIONEN

Overview of materials
According to ASTM-D 1418-76

● = deliverable material

			Polymer	Varied trade names
●	1	NR	Natural caoutchouc	
	2	IR	Isoprene caoutchuc	Natsyn, Criflex IR
●	3	SBR	Styrene butadiene caoutchuc	Buna Hüls, Polysar S, Soprene
	4	BR	Butadiene caoutchuc	Buna CB, Polybutadien K
●	5	IIR	Butyl caoutchuc	Poysar Butyl, Esso-Butyl
●	6	EPDM	Ethylene-propylene terpolymerisat	Keltan, Buna AP, Dutral
●	7	NBR	Acrylonitrile butadiene caoutchuc	Perbunan, Polysar-Krynac
	8	CO, ECO	Epichlorhydrin caoutchuc	Herclor, Hydrin
●	9	CR	Chloroprene caoutchuc	Baypren, Neoprene
	10	CSM	Chlorosulfonated polyethylene	Hypalon
	11	AU, EU	Urethane caoutchuc	Urepan, Adiprene C
	12	T	Polysulfide caoutchuc	Thiokol
	13	SI	Silicone caoutchuc	Silopren
	14	FSI	Fluorine-silicone caoutchuc	Silastic
	15	FKM	Fluorine caoutchuc	Viton, Fluorel, Tecnoflon
	16	ACM	Polyacrylate caoutchuc	Hycar
	17	PUR	Polyurethane	Vulkollan
	18	PTEE	Polytetrafluoroethylene	Teflon, Hostaflon

Overview table
Qualities of the individual materials

Qualities	NR	IR	SBR	BR	IIR	EPDM	NBR	ECO	CR	CSM	AU	T	SI	FSI	FKM	ACM	PUR	PTFE
Tear resistance non-reinforced	1	2	5	6	4	5	5	5	3	5	2	6	6	6	5	6	1	1
Tear resistance reinforced	1	2	2	4	3	3	2	3	2	3	1	5	4	4	3	3	-	1
Elongation at break	1	1	2	3	2	3	2	3	2	3	2	4	4	4	3	3	2	3
Rebound elasticity	2	2	3	1	6	3	3	2	3	4	3	4	3	3	5	5	2	x
Abrasion resistance	2	2	2	1	3	3	2	3	2	3	1	5	5	5	4	4	1	3
Initial tear resistance	2	2	3	5	3	3	3	3	2	4	3	4	6	6	3	4	1	2
Electrical resistance	1	1	2	2	2	2	4	5	3	4	3	3	1	1	4	4	2	1
Temperature range, hot +°C	90	90	100	100	140	150	130	145	120	130	120	140	200	200	220	160	80	260
Temperature range, cold -°C	50	40	40	60	40	40	40	40	30	40	20	30	80	80	25	20	35	190
Ageing resistance	3	3	3	3	2	1	3	2	2	2	2	3	1	1	1	2	1	1
Ozone resistance	4	4	4	3	2	1	3	2	2	2	2	2	1	1	1	2	1	1
Petrol resistance	6	6	4	5	6	5	1	1	2	2	1	1	5	1	1	1	2	1
Oil and fat resistance	6	6	5	6	6	4	1	1	2	2	4	4	4	4	4	4	2	1
Acid resistance	3	3	3	3	2	1	4	5	2	2	5	4	5	4	1	5	6	1
Mineral oil resistance	3	3	3	3	2	2	3	5	2	2	5	3	5	4	1	5	6	1
Hot water	3	3	2	3	1	2	3	4	3	3	5	3	5	4	2	5	6	1

1 = excellent,
2 = very good, 3 = good,
4 = moderate,
5 = low,
6 = insufficient,
x = no comparison with elastomer

TÜVRheinland ZERTIFIZIERT
Management System ISO 9001:2015 ISO 14001:2015
www.tuv.com ID 9108624624

Further materials and surface finishes on demand. We will be pleased to give you advice.
Phone: +49 (0) 231 / 725 790 -0 eMail: info@hokon-verschlusstechnik.de
Fax: +49 (0) 231 / 725 790 -10 Homepage: www.hokon-verschlusstechnik.de

Self adhesive rubber buffers „Bumper“

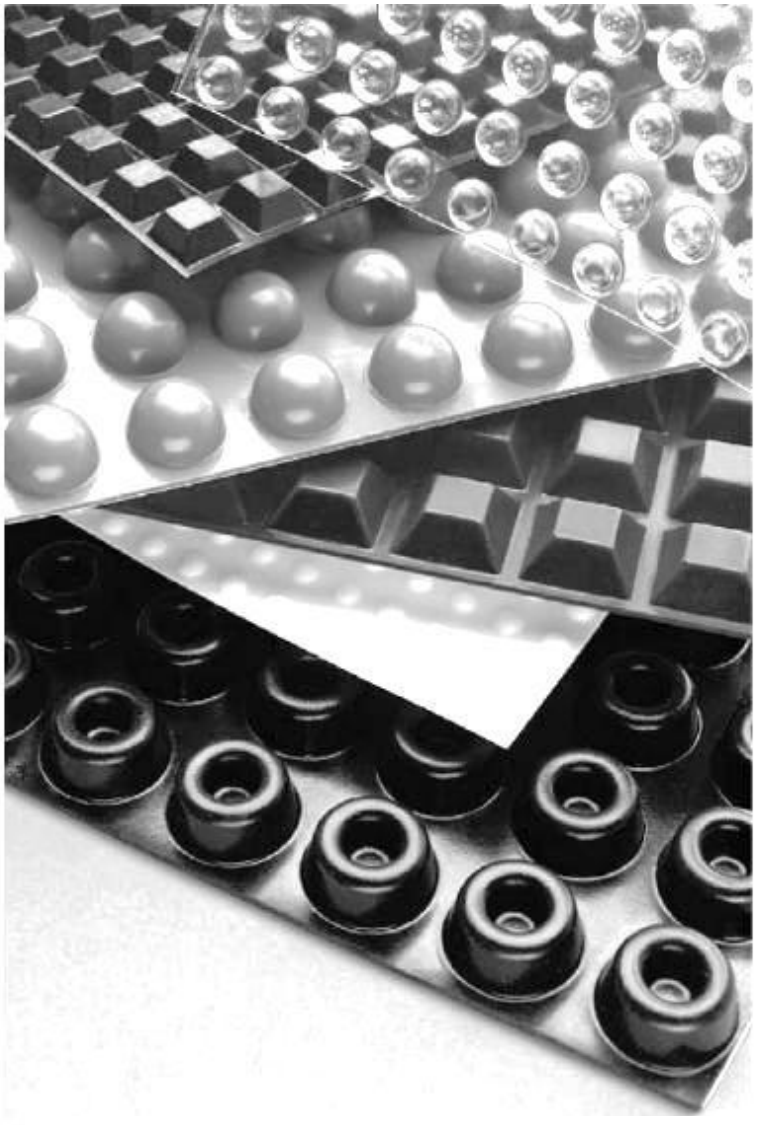









Self adhesive rubber buffers „Bumper“

- einfache Handhabung
- excellente Verschleißfestigkeit
- elastisch, bruchfest, unverwüstlich
- kein Abfärben
- keine Beschädigung von Oberflächen
- vibrations- und stoßdämpfend
- ausgezeichnete Reibungs- und Rutschfestigkeit
- enthalten keine Weichmacher, Öle oder Füllstoffe
- RoHS-konform
- UL-geprüft

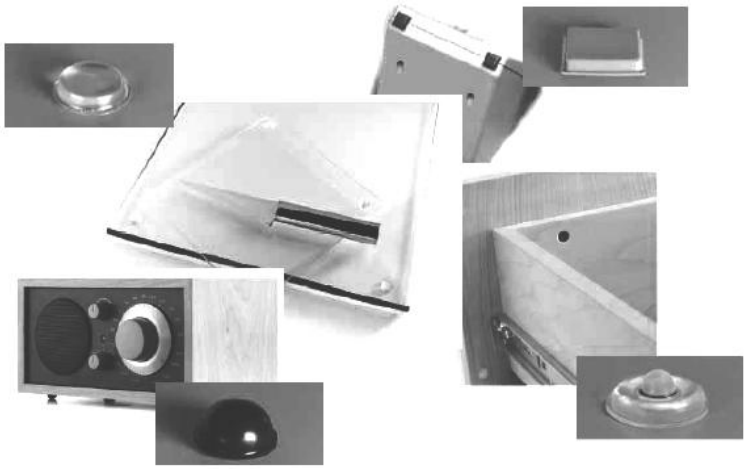

Adhesive rubber buffers - "Bumpers" Pages M-26 – M-32

Adhesive rubber buffers - **Cylindrical** Page M-28
Adhesive rubber buffers - **Half round** Page M-29
Adhesive rubber buffers - **Square** Page M-30
Adhesive rubber buffers - **Cylindrical countersunk** Page M-31
Adhesive rubber buffers - **Silencing** Page M-31
Adhesive rubber buffers - **Conical** Page M-31
Adhesive rubber buffers - **Technical information** Page M-32

Ordering example:

Art.No. HS-33 . GL-R

Adhesive „Typ: „A“ or „R“

Colour: CL-transparent, BK-black

Bumper execution

TÜVRheinland ZERTIFIZIERT Management System ISO 9001:2015 ISO 14001:2015 www.tuv.com ID 9108624624

Further materials and surface finishes on demand. We will be pleased to give you advice.
Phone: +49 (0) 231 / 725 790 -0 eMail: info@hokon-verschlusstechnik.de
Fax: +49 (0) 231 / 725 790 -10 Homepage: www.hokon-verschlusstechnik.de

Adhesive
Rubber buffers „Bumper“

Adhesive rubber buffers “Bumpers“

Cylindrical		Article no.	Colour	Colour		VPE	Carton	MOQ
				A Ø	B	Piece	Piece	Piece
		P-HS-34-CL-R	None	9.5	3.2	300	6,000	300
		P-HS-34-BK-R	Black	9.5	3.2	300	6,000	6,000
		P-HS-34-GR-R	Gray	9.5	3.2	300	6,000	6,000
		P-HS-34-WH-R	White	9.5	3.2	300	6,000	6,000
	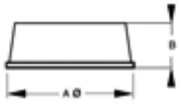	P-HS-35-CL-R	None	9.5	4.8	200	5,000	200
		P-HS-35-BK-R	Black	9.5	4.8	200	5,000	5,000
		P-HS-05-CL-R	None	12.7	1.5	200	5,000	200
		P-HS-05-BK-R	Black	12.7	1.5	200	5,000	200
		P-HS-05-GR-R	Gray	12.7	1.5	200	5,000	5,000
		P-HS-05-WH-R	White	12.7	1.5	200	5,000	5,000
		P-HS-05-BR-R	Braun	12.7	1.5	200	5,000	5,000
		P-HS-01-CL-R	None	12.7	3.5	200	5,000	200
		P-HS-01-BK-R	Black	12.7	3.5	200	5,000	200
		P-HS-01-GR-R	Gray	12.7	3.5	200	5,000	5,000
		P-HS-01-WH-R	White	12.7	3.5	200	5,000	5,000
		P-HS-01-BR-R	Brown	12.7	3.5	200	5,000	5,000
		P-HS-06-CL-R	None	12.7	6.4	200	5,000	200
		P-HS-06-BK-R	Black	12.7	6.4	200	5,000	200
		P-HS-06-WH-R	White	12.7	6.4	200	5,000	5,000
		P-HS-11-CL-R	None	16.5	10.2	128	2,560	128
		P-HS-11-BK-R	Black	16.5	10.2	128	2,560	128
		P-HS-11-GR-R	Gray	16.5	10.2	128	2,560	2,560
		P-HS-44-CL-R	None	19.1	4.1	98	2,450	98
		P-HS-44-BK-R	Black	19.1	4.1	98	2,450	98
		P-HS-44-WH-R	White	19.1	4.1	98	2,450	2,450
	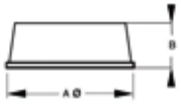	P-HS-41-CL-R	None	19.8	5.1	84	3,360	84
		P-HS-41-BK-R	Black	19.8	5.1	84	3,360	84
		P-HS-41-GR-R	Gray	19.8	5.1	84	3,360	3,360
		P-HS-24-CL-R	None	20.6	3.0	72	2,520	72
		P-HS-24-BK-R	Black	20.6	3.0	72	2,520	2,520
		P-HS-24-GR-R	Gray	20.6	3.0	72	2,520	2,520
		P-HS-24-WH-R	White	20.6	3.0	72	2,520	2,520
		P-HS-24-BR-R	Brown	20.6	3.0	72	2,520	2,520
		P-HS-72-CL-R	None	31.24	2.54	32	2,400	32
		P-HS-72-BK-R	Black	31.24	2.54	32	2,400	2,400

All colours in mm · MOQ = Minimum order quantity or a multiple thereof.

Adhesive
Rubber buffers „Bumper“

Adhesive rubber buffers “Bumpers“

Half round		Article no.	Colour	Colour		VPE	Carton	MOQ
				A Ø	B	Piece	Piece	Piece
	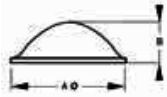	P-HS-40-CL-R	None	6.4	1.6	272	11,424	272
		P-HS-40-BK-R	Black	6.4	1.6	272	11,424	272
		P-HS-40-WH-R	White	6.4	1.6	272	11,424	11,424
	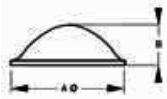	P-HS-25-CL-R	None	6.4	2.1	450	5,400	450
		P-HS-25-BK-R	Black	6.4	2.1	450	5,400	5,400
	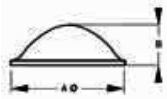	P-HS-27-CL-R	None	7.9	2.2	75	5,400	75
		P-HS-27-BK-R	Black	7.9	2.2	75	5,400	5,400
	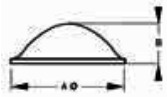	P-HS-07-CL-R	None	8.5	2.2	144	5,040	144
		P-HS-07-BK-R	Black	8.5	2.2	144	5,040	5,040
		P-HS-07-WH-R	White	8.5	2.2	144	5,040	5,040
	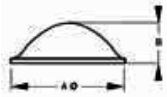	P-HS-12-CL-R	None	9.5	3.8	72	7,200	72
		P-HS-12-BK-R	Black	9.5	3.8	72	7,200	7,200
		P-HS-12-GR-R	Gray	9.5	3.8	72	7,200	7,200
		P-HS-12-WH-R	White	9.5	3.8	72	7,200	7,200
		P-HS-12-BR-R	Brown	9.5	3.8	72	7,200	7,200
	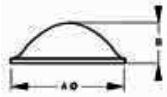	P-HS-22-CL-R	None	9.5	5.4	300	6,000	300
		P-HS-22-BK-R	Black	9.5	5.4	300	6,000	6,000
	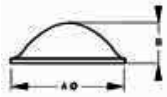	P-HS-02-CL-R	None	11.1	5.1	242	5,082	242
		P-HS-02-BK-R	Black	11.1	5.1	242	5,082	242
		P-HS-02-GR-R	Gray	11.1	5.1	242	5,082	5,082
		P-HS-02-WH-R	White	11.1	5.1	242	5,082	5,082
		P-HS-02-BR-R	Brown	11.1	5.1	242	5,082	5,082
	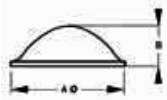	P-HS-15-CL-R	None	15.7	7.9	128	3,200	128
		P-HS-15-BK-R	Black	15.7	7.9	128	3,200	128
		P-HS-15-GR-R	Gray	15.7	7.9	128	3,200	3,200
		P-HS-15-WH-R	White	15.7	7.9	128	3,200	3,200
		P-HS-15-BR-R	Brown	15.7	7.9	128	3,200	3,200
	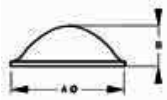	P-HS-08-CL-R	None	17.8	9.6	98	2,254	98
		P-HS-08-BK-R	Black	17.8	9.6	98	2,254	2,254
		P-HS-08-GR-R	Gray	17.8	9.6	98	2,254	2,254
		P-HS-08-WH-R	White	17.8	9.6	98	2,254	2,254
	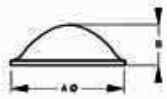	P-HS-39-CL-R	None	19.1	1.9	84	5,040	84
		P-HS-39-BK-R	Black	19.1	1.9	84	5,040	5,040

All colours in mm · MOQ = Minimum order quantity or a multiple thereof.

TÜVRheinland ZERTIFIZIERT
Management System
ISO 9001:2015
ISO 14001:2015
www.tuv.com ID 9108624624

Further materials and surface finishes on demand. We will be pleased to give you advice.
Phone: +49 (0) 231 / 725 790 -0
Fax: +49 (0) 231 / 725 790 -10
eMail: info@hokon-verschlusstechnik.de
Homepage: www.hokon-verschlusstechnik.de

Adhesive
Rubber buffers „Bumper“

Adhesive rubber buffers “Bumpers“

Square		Article no.	Colour	Colour		VPE	Carton	MOQ
				A□	B	Piece	Piece	Piece
	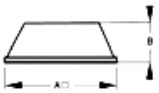	P-HS-20-CL-R	None	10.2	2.5	242	5,082	242
		P-HS-20-BK-R	Black	10.2	2.5	242	5,082	5,082
		P-HS-20-GR-R	Gray	10.2	2.5	242	5,082	5,082
		P-HS-20-WH-R	White	10.2	2.5	242	5,082	5,082
		P-HS-20-BR-R	Brown	10.2	2.5	242	5,082	5,082
	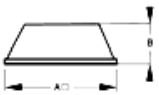	P-HS-32-CL-R	None	12.7	3.0	200	5,000	200
		P-HS-32-BK-R	Black	12.7	3.0	200	5,000	200
		P-HS-32-GR-R	Gray	12.7	3.0	200	5,000	5,000
		P-HS-32-WH-R	White	12.7	3.0	200	5,000	5,000
		P-HS-32-BR-R	Brown	12.7	3.0	200	5,000	5,000
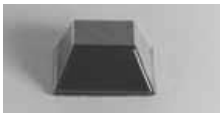	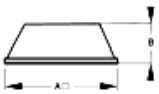	P-HS-03-CL-R	None	12.7	5.8	200	5,000	200
		P-HS-03-BK-R	Black	12.7	5.8	200	5,000	5,000
		P-HS-03-GR-R	Gray	12.7	5.8	200	5,000	5,000
		P-HS-03-WH-R	White	12.7	5.8	200	5,000	5,000
		P-HS-03-BR-R	Brown	12.7	5.8	200	5,000	5,000
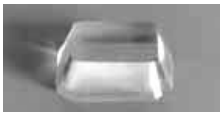	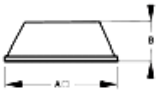	P-HS-29-CL-A	None	19.8	6.4	98	2,940	98
		P-HS-29-BK-A	Black	19.8	6.4	98	2,940	2,940
		P-HS-29-BR-A	Brown	19.8	6.4	98	2,940	2,940
	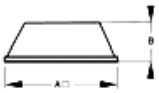	P-HS-04-CL-R	None	19.8	9.7	1	2,000	100
		P-HS-04-BK-R	Black	19.8	9.7	1	2,000	2,000
		P-HS-04-GR-R	Gray	19.8	9.7	1	2,000	2,000
		P-HS-04-BR-R	Brown	19.8	9.7	1	2,000	2,000
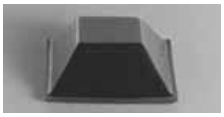	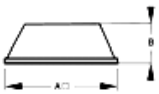	P-HS-19-CL-R	None	20.6	7.6	98	2,646	98
		P-HS-19-BK-R	Black	20.6	7.6	98	2,646	98
		P-HS-19-GR-R	Gray	20.6	7.6	98	2,646	2,646
		P-HS-19-BR-R	Brown	20.6	7.6	98	2,646	2,646
	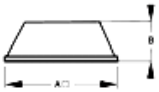	P-HS-36-CL-R	None	25.4	4.6	55	2,310	2,310
		P-HS-36-BK-R	Black	25.4	4.6	55	2,310	2,310
		P-HS-36-GR-R	Gray	25.4	4.6	55	2,310	2,310

All colours in mm · MOQ = Minimum order quantity or a multiple thereof.

Adhesive
Rubber buffers „Bumper“

Adhesive rubber buffers “Bumpers“

Cylindrical countersunk		Article no.	Colour	Colour		VPE	Carton	MOQ
				A Ø	B	Piece	Piece	Piece
	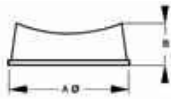	P-HS-18-CL-R	None	12.7	3.5	200	5,000	200
		P-HS-18-BK-R	Black	12.7	3.5	200	5,000	5,000
		P-HS-18-GR-R	Gray	12.7	3.5	200	5,000	5,000
		P-HS-18-WH-R	White	12.7	3.5	200	5,000	5,000
	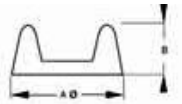	P-HS-17-CL-R	None	22.3	10.2	72	1,440	72
		P-HS-17-BK-R	Black	22.3	10.2	72	1,440	72
		P-HS-17-GR-R	Gray	22.3	10.2	72	1,440	1,440
		P-HS-17-WH-R	White	22.3	10.2	72	1,440	1,440
		P-HS-17-BR-R	Brown	22.3	10.2	72	1,440	1,440
	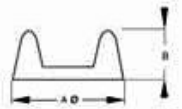	P-HS-30-CL-A	None	46.0	15.2	1	500	500
		P-HS-30-BK-A	Black	46.0	15.2	1	500	500
		P-HS-30-GR-A	Gray	46.0	15.2	1	500	500
		P-HS-30-WH-A	White	46.0	15.2	1	500	500
		P-HS-30-BR-A	Brown	46.0	15.2	1	500	500

Silencing		Article no.	Colour	Colour		VPE	Carton	MOQ
				A Ø	B	Piece	Piece	Piece
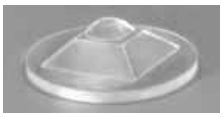	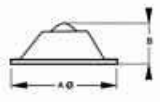	P-HS-33-SD-CL-R	None	12.7	3.8	200	5,000	200
	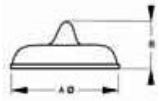	P-HS-58-SD-CL-R	None	12.7	5.1	200	5,000	200

Conical		Article no.	Colour	Colour		VPE	Carton	MOQ
				A Ø	B	Piece	Piece	Piece
	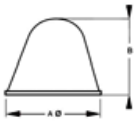	P-HS-37-CL-A	None	18.3	14.2	1	1,500	1,500
		P-HS-37-BK-A	Black	18.3	14.2	1	1,500	1,500
	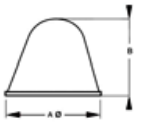	P-HS-47-CL-A	None	19.1	19.1	1	1,000	1,000
		P-HS-47-BK-A	Black	19.1	19.1	1	1,000	1,000
	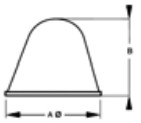	P-HS-57-CL-A	None	20.0	22.5	1	1,000	1,000
		P-HS-57-BK-A	Black	20.0	22.5	1	1,000	1,000

All colours in mm · MOQ = Minimum order quantity or a multiple thereof.

TÜVRheinland ZERTIFIZIERT
Management System
ISO 9001:2015
ISO 14001:2015
www.tuv.com ID 9108624624

Further materials and surface finishes on demand. We will be pleased to give you advice.
Phone: +49 (0) 231 / 725 790 -0
Fax: +49 (0) 231 / 725 790 -10
eMail: info@hokon-verschlusstechnik.de
Homepage: www.hokon-verschlusstechnik.de

Adhesive
Rubber buffers „Bumper“

Technical information - Adhesive rubber buffers “Bumpers“

Material: polyurethane	**Standard**	**SD-Completion**
Hardness shore A	60° - 70°	50° - 55°
Tensile strength g/cm 2	44,802	52,730
Ultimate strain %	192	607
Breaking strength g/cm	38,216	22,680
Wearing resistance g/1000 cycles	0.016	0.010
Flammability:	UL-94 HBF	UL-94 HBF

Die SD-Completion is used specially for silencing.
The completion is not designed for heavy loads.

Tolerances: + / – 0.5 mm

Colours: None, Black, White, Gray, and Brown (see table).
The crystal-clear bumper is almost invisible in gleam or translucent applications.

Adhesive:
Type R: Standard for all Bumpers, except
P-HS-29, P-HS-30, P-HS-37, P-HS-47, P-HS-57
Dynamic synthetical rubber adhesive
with high shearing force, solvent based
Temperature processing: +18° ... + 65° C
Durability: +18° ... + 82° C
Type A: deliverable on enquiry, for
P-HS-29, P-HS-30, P-HS-37, P-HS-47,
P-BS-57 standard.
Powerful acrylic-adhesive with high shearing force,
fast liability, cold resistant,
solvent based
Temperature processing: + 18° ... + 65° C
Durability: -40° ... + 149° C

Storage: by 23° C and 55% rel.
air humidity
Delivery form: on punched cards
Amount of Bumpers, see table (VPE)

Usage instructions:

To achieve the highest liability, the surface must be smooth, even, not porous, dry, clean and free from oil, fat, solvents and dirt. Through bending of the carrier plate, the bumpers can be taken off easily. At doing this do not touch the adhesive. Press the bumpers with sufficient pressure to achieve a complete connection. After 24 hours the maximal liability is achieved and the bumpers can suspend great forces or weights.
The bumpers do not contain any plasticizers, which could possibly damage the surface. The user should prove the suitability of the bumpers for the specifical utilility, under the given conditions.

Adhesive
Rubber buffers „Bumper“

Management System
ISO 9001:2015
ISO 14001:2015
TÜVRheinland ZERTIFIZIERT
www.tuv.com ID 9108624624

Further materials and surface finishes on demand. We will be pleased to give you advice.
Phone: +49 (0) 231 / 725 790 -0 eMail: info@hokon-verschlusstechnik.de
Fax: +49 (0) 231 / 725 790 -10 Homepage: www.hokon-verschlusstechnik.de